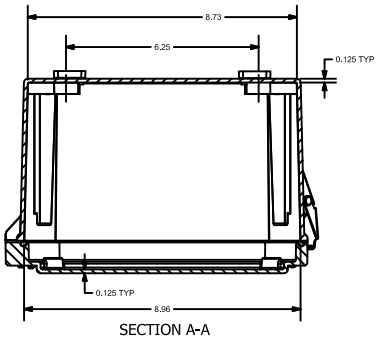

SECTION A-A

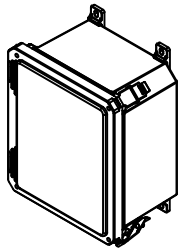

FOR REFERENCE ONLY
MOUNTING FEET SHOWN AS INSTALLED

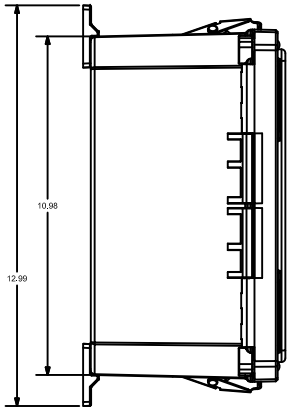

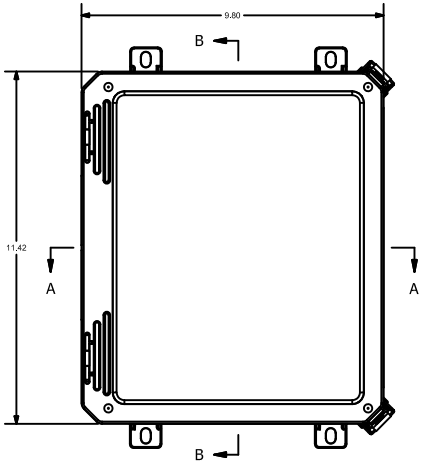

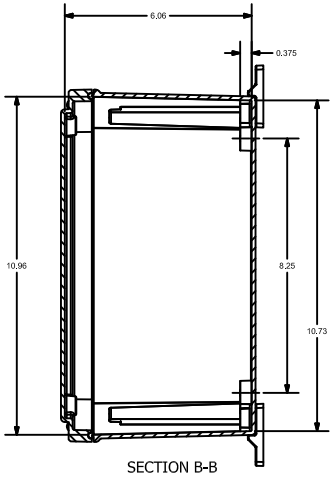

SECTION B-B

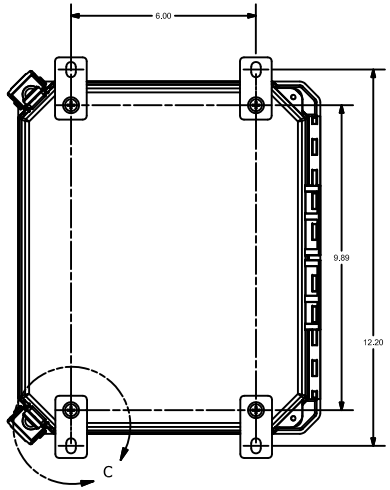

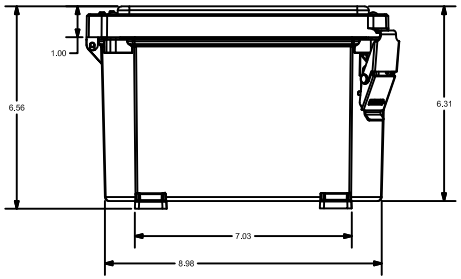

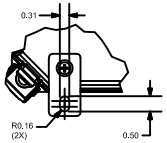

DETAIL C
(4X)

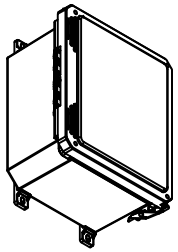

STAHLIN DIAMOND SHIELD SERIES ENCLOSURE, NEMA 1/3/3S/4X/12/13, 10 X 8 X 6IN (HXWXD), WALL MOUNT, FIBERGLASS REINFORCED POLYESTER, GRAY, CROWNED SINGLE-DOOR, (2) QUICK-RELEASE LATCHES, PADLOCK HASP AND STAPLE.			DS100806HPL				AutomationDirect.com 1-800-633-0405
3rd ANGLE	NOT TO SCALE	PART DIMENSIONS MAY DIFFER SLIGHTLY DUE TO MANUFACTURER'S VARIANCES	METRIC UNITS USED FOR PART DESIGN	UNLESS OTHERWISE SPECIFIED UNITS ARE:	inch [mm]	LATEST VERSION 1/27/2023	SHEET 1 OF 1