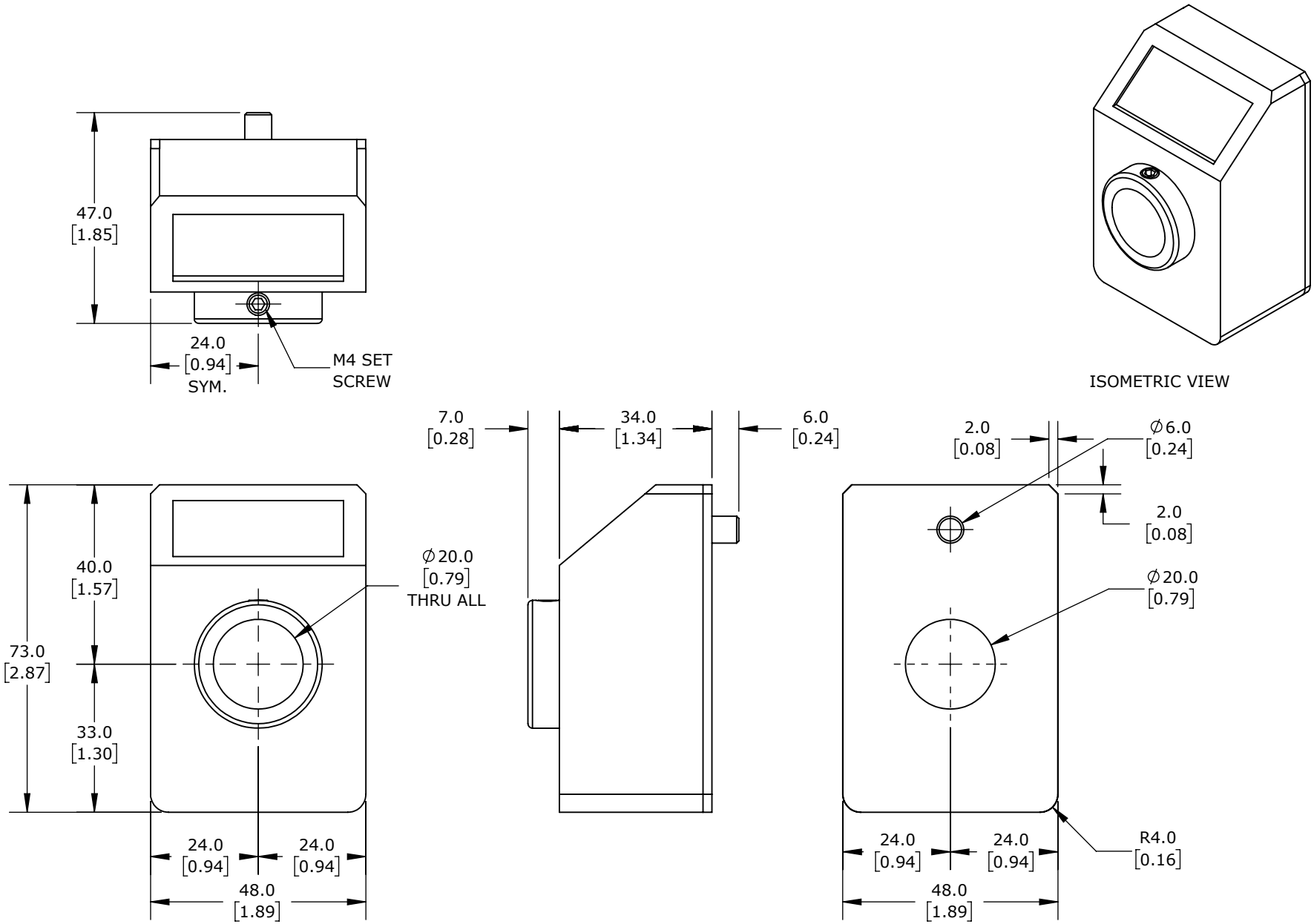

ELESA POSITION INDICATOR, 12MM 6-DIGIT LCD, PROGRAMMABLE, 20MM MOUNTING HOLE SIZE, IP65\.				DD52RE-SST-IP65			AutomationDirect.com 1-800-633-0405
3rd ANGLE	NOT TO SCALE	PART DIMENSIONS MAY DIFFER SLIGHTLY DUE TO MANUFACTURER'S VARIANCES	METRIC UNITS USED FOR PART DESIGN	UNLESS OTHERWISE SPECIFIED UNITS ARE:	**mm [inch]**	LATEST VERSION 5/23/2023	SHEET 1 OF 1