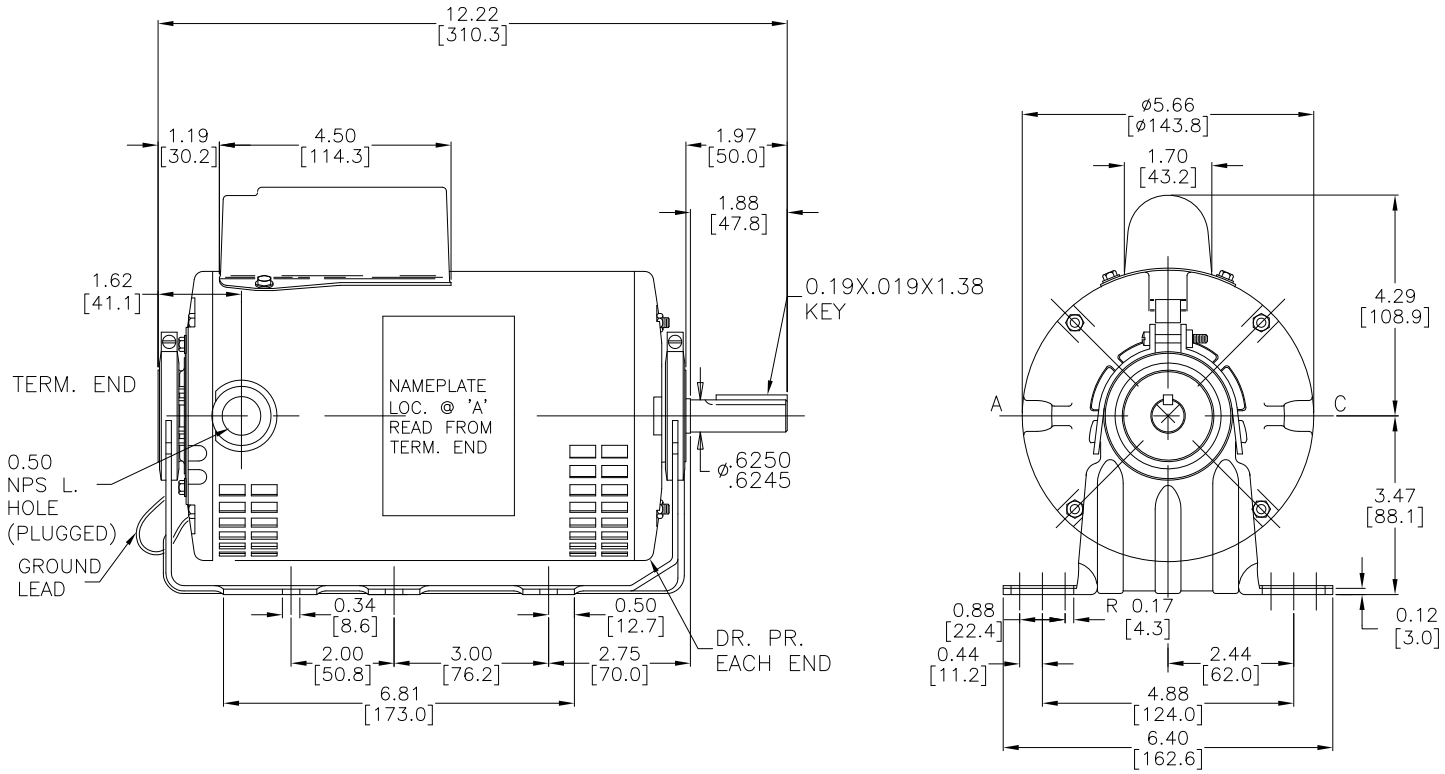

NOTES:

1. DIMENSIONS CAN BE CHANGED BY MANUFACTURER WITHOUT NOTICE.
2. DIMENSIONS DO NOT IMPLY TOLERANCE.

D118

Units: inches [mm]

Scale: Full

MARATHON STANDARD PRERFORMANCE MOTOR,
1HP, 1-PH, 115/208-230 VAC, 3600 RPM,
ODP 56 FRAME

AUTOMATIONDIRECT.com