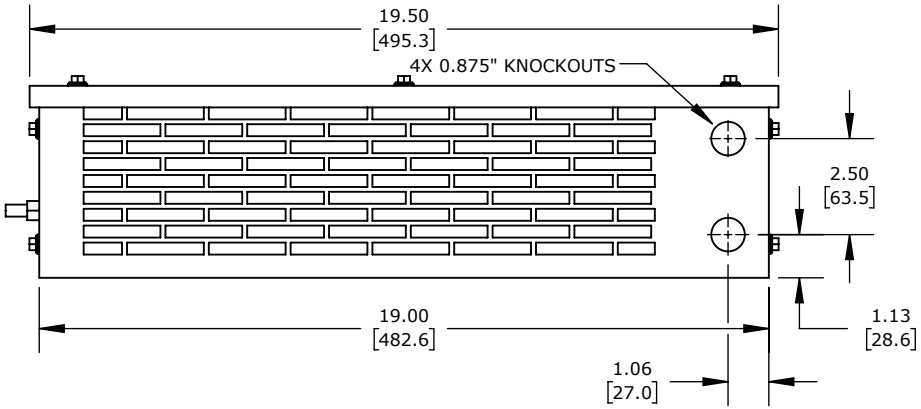

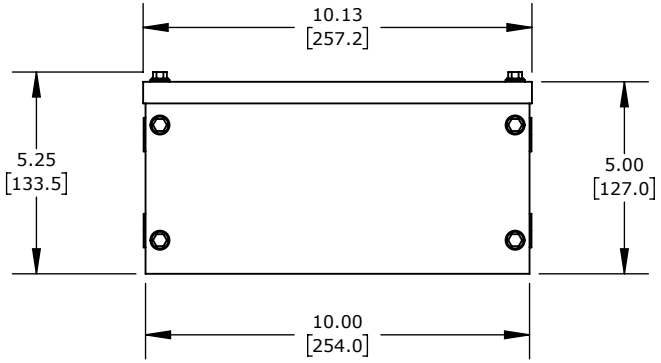

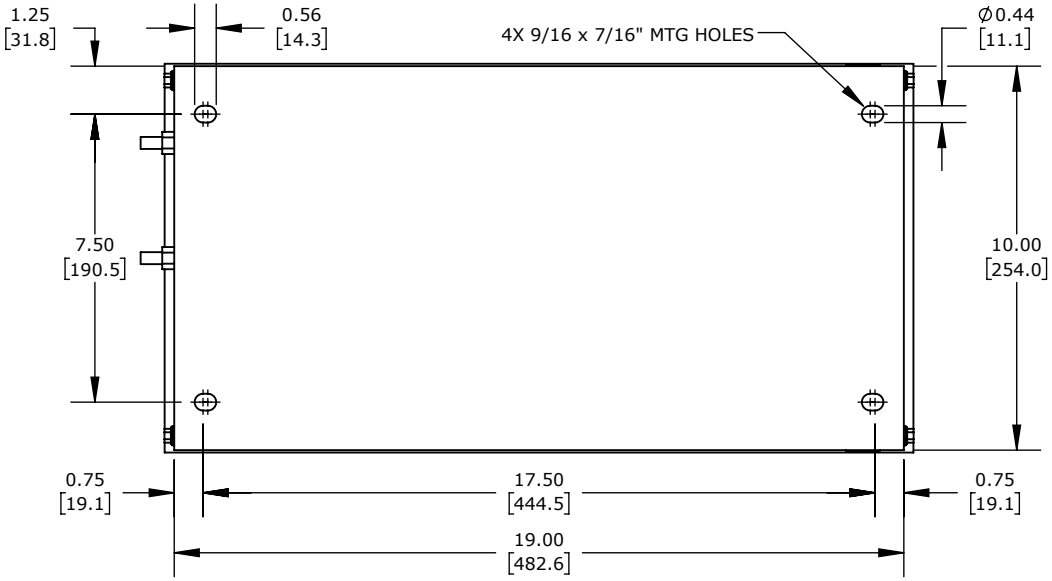

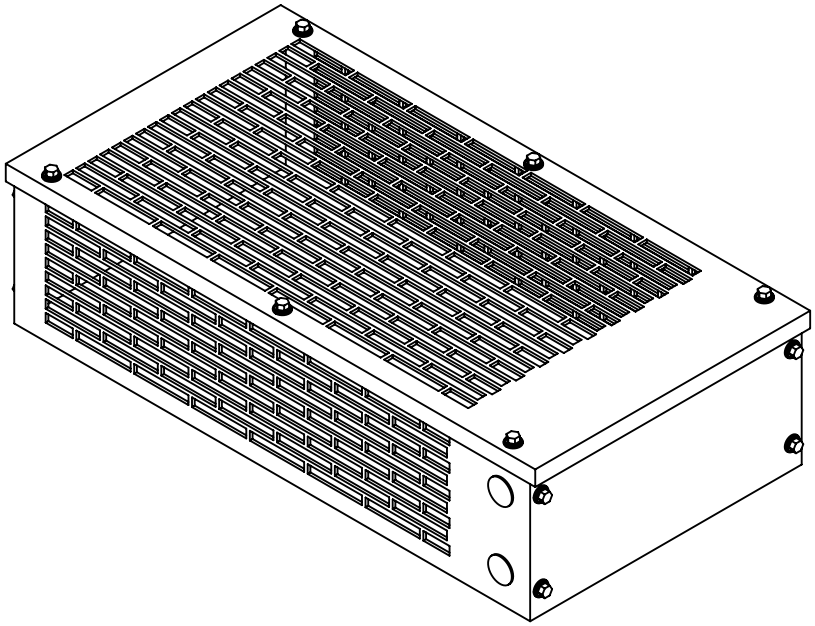

CROHM BRAKING RESISTOR, 2.3 KW, 26 OHM, NEMA 1, BUILT-IN TEMPERATURE SWITCH, FOR USE WITH MULTIPLE AC DRIVES			BR-N1-2K3W26				AutomationDirect.com 1-800-633-0405
3rd ANGLE	NOT TO SCALE	PART DIMENSIONS MAY DIFFER SLIGHTLY DUE TO MANUFACTURER'S VARIANCES	METRIC UNITS USED FOR PART DESIGN	UNLESS OTHERWISE SPECIFIED UNITS ARE:	**inch [mm]**	LATEST VERSION 6/11/2024	SHEET 1 OF 1