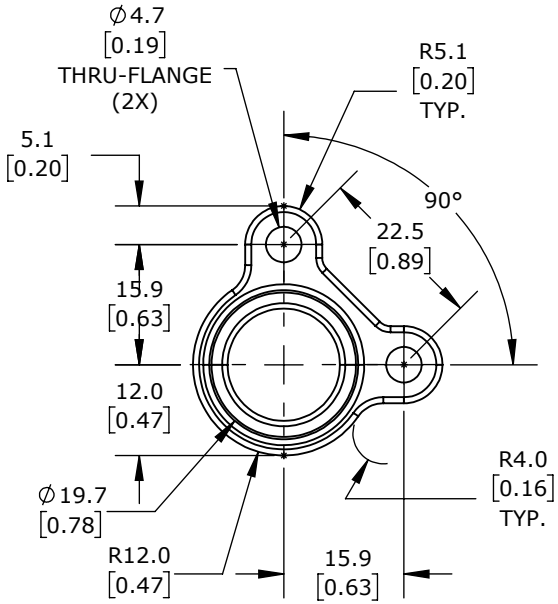

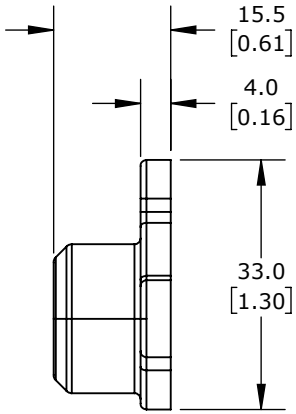

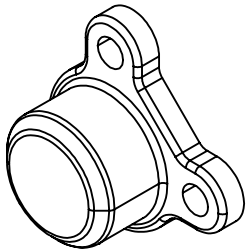

ISOMETRIC VIEW

IDEM Z-RANGE SAFETY SWITCH ACTUATOR, REPLACEMENT, NON-CONTACT MASTER CODED RFID, POLYESTER HOUSING, 33 X 33MM.				BPZ-410200			AutomationDirect.com 1-800-633-0405
3rd ANGLE	NOT TO SCALE	PART DIMENSIONS MAY DIFFER SLIGHTLY DUE TO MANUFACTURER'S VARIANCES	METRIC UNITS USED FOR PART DESIGN	UNLESS OTHERWISE SPECIFIED UNITS ARE:	**mm [inch]**	LATEST VERSION 9/13/2023	SHEET 1 OF 1