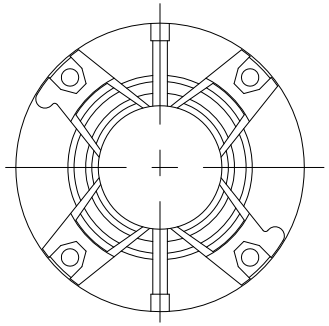

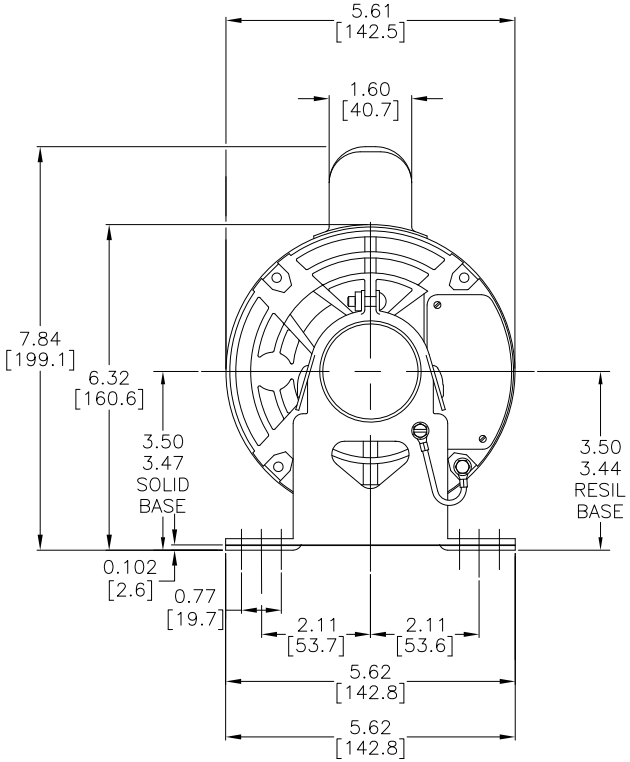

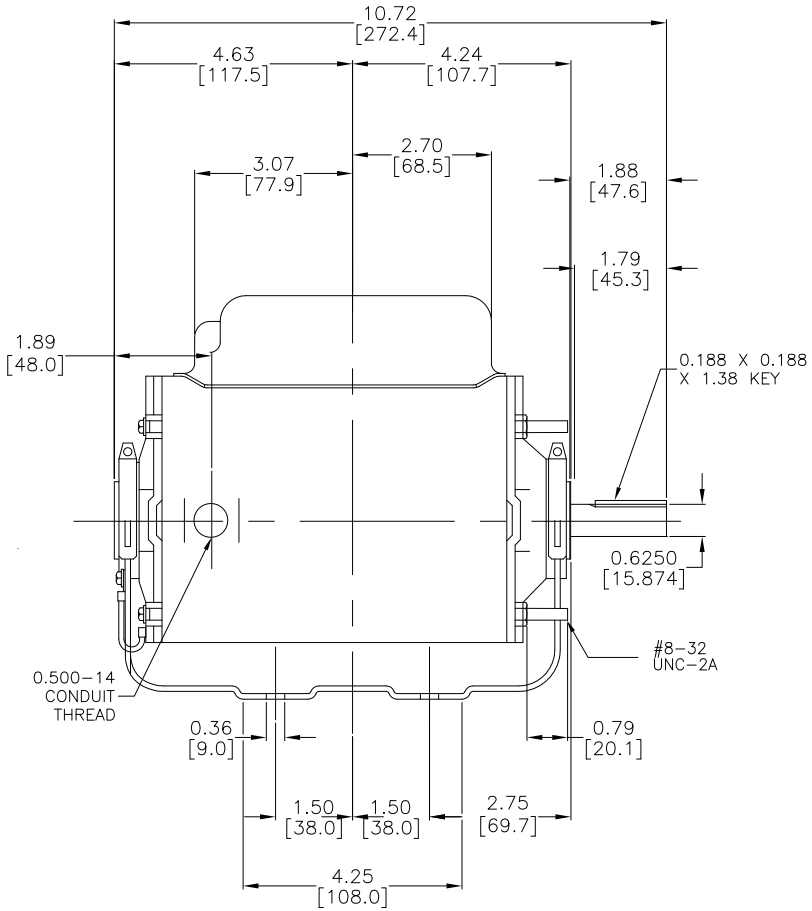

NOTES:

1. DIMENSIONS CAN BE CHANGED BY MANUFACTURER WITHOUT NOTICE.
2. DIMENSIONS DO NOT IMPLY TOLERANCE.

B319

Units: inches [mm]

Scale: Full

MARATHON STANDARD PRERFORMANCE MOTOR,
3/4 HP, 1-PH, 115/208-230 VAC, 1800 RPM,
ODP 56 FRAME

AUTOMATIONDIRECT.com