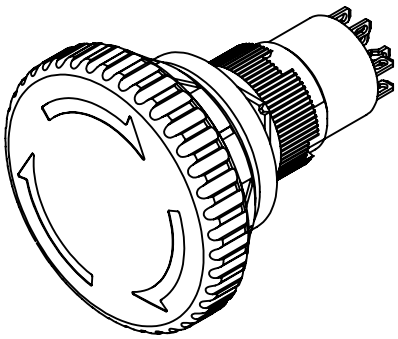

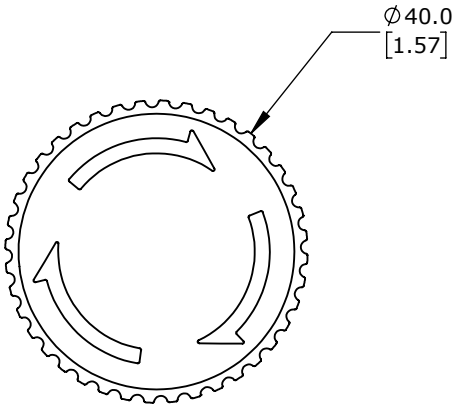

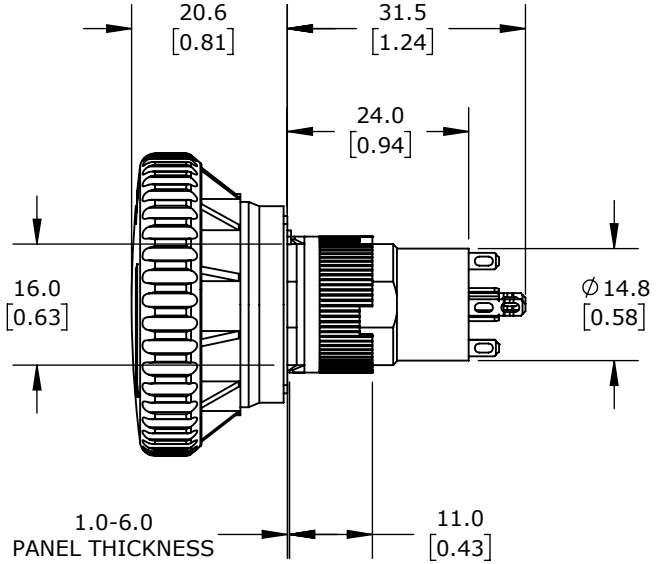

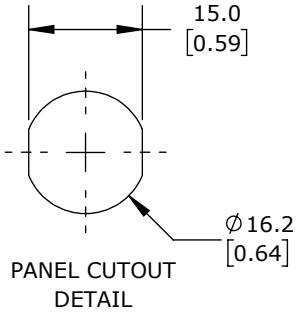

FUJI ELECTRIC EMERGENCY STOP PUSHBUTTON: RED				AR16V1L-12E3R			AutomationDirect.com 1-800-633-0405
3rd ANGLE	NOT TO SCALE	PART DIMENSIONS MAY DIFFER SLIGHTLY DUE TO MANUFACTURER'S VARIANCES	METRIC UNITS USED FOR PART DESIGN	UNLESS OTHERWISE SPECIFIED UNITS ARE:	**mm [inch]**	LATEST VERSION 8/22/2022	SHEET 1 OF 1