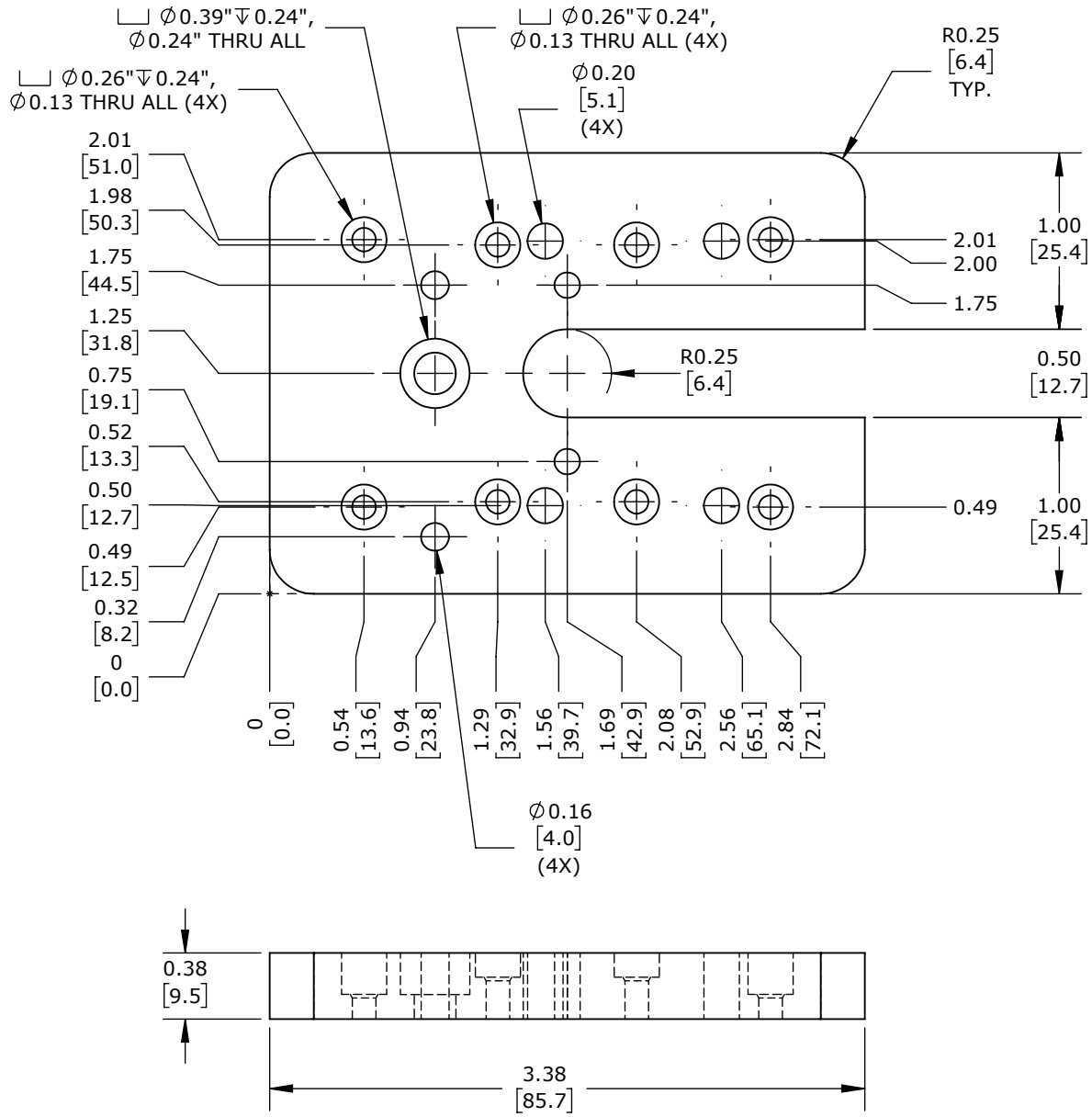

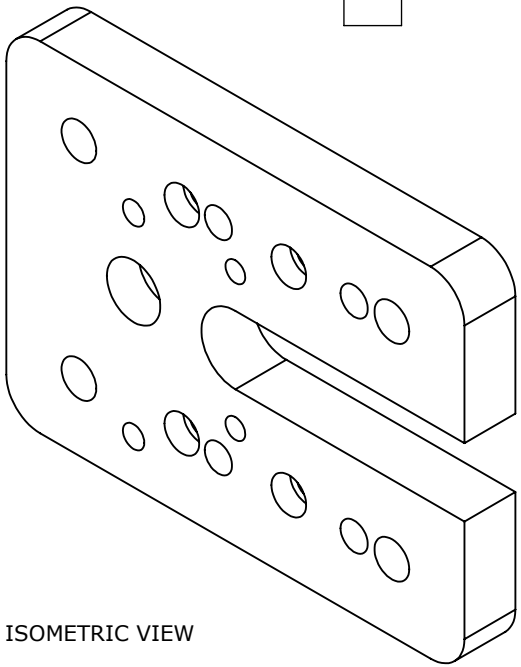

ISOMETRIC VIEW

TOP VIEW

FRONT VIEW

SIDE VIEW

SWIVELLINK STANDARD SERIES IMPERIAL MOUNTING PLATE, FOR USE WITH BALL BASES AFSB-1 OR AFSB-1-15 OR AFSB-1XS AND COGNEX DATAMAN READERS AND INSIGHT CAMERAS.			AFSB-521-C-DI				AutomationDirect.com 1-800-633-0405
3rd ANGLE	NOT TO SCALE	PART DIMENSIONS MAY DIFFER SLIGHTLY DUE TO MANUFACTURER'S VARIANCES	METRIC UNITS USED FOR PART DESIGN	UNLESS OTHERWISE SPECIFIED UNITS ARE:	**inch [mm]**	LATEST VERSION 3/29/2023	SHEET 1 OF 1