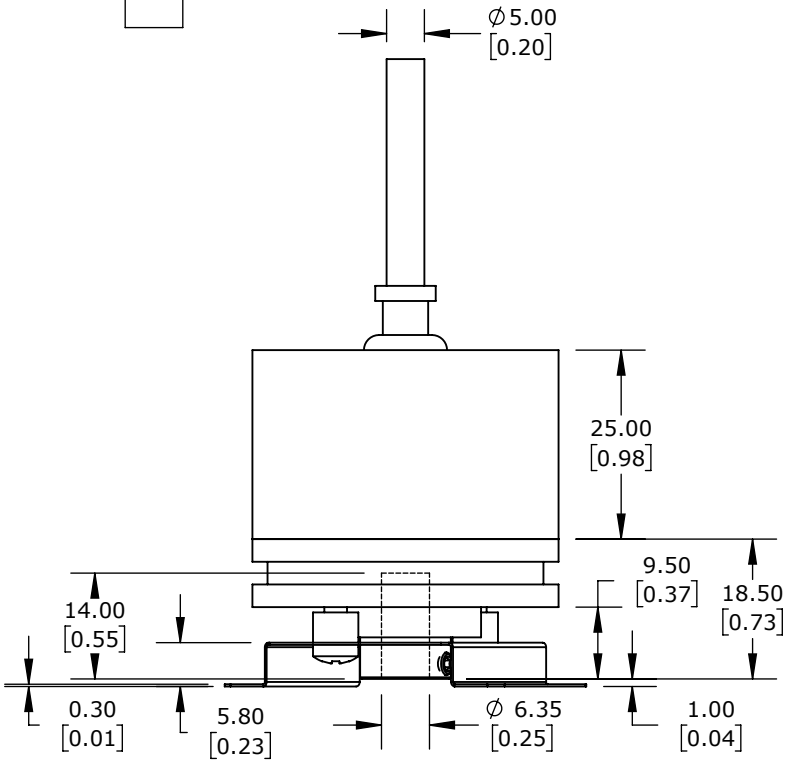

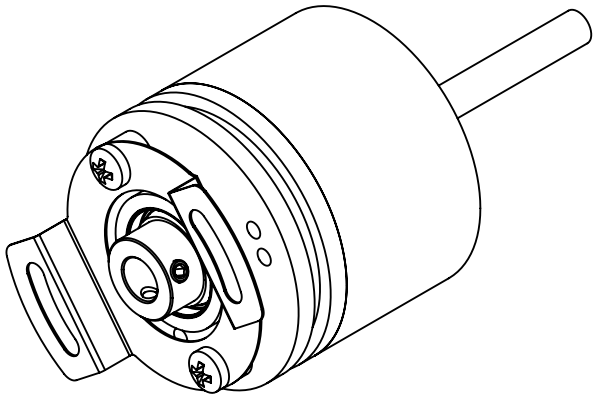

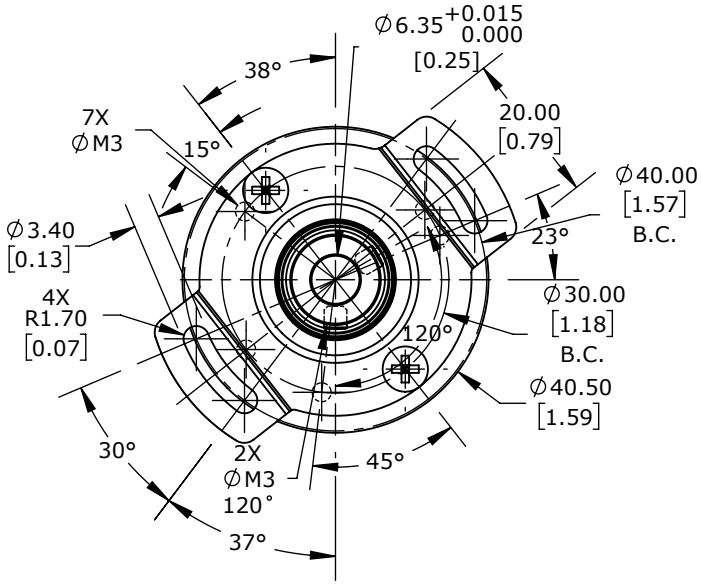

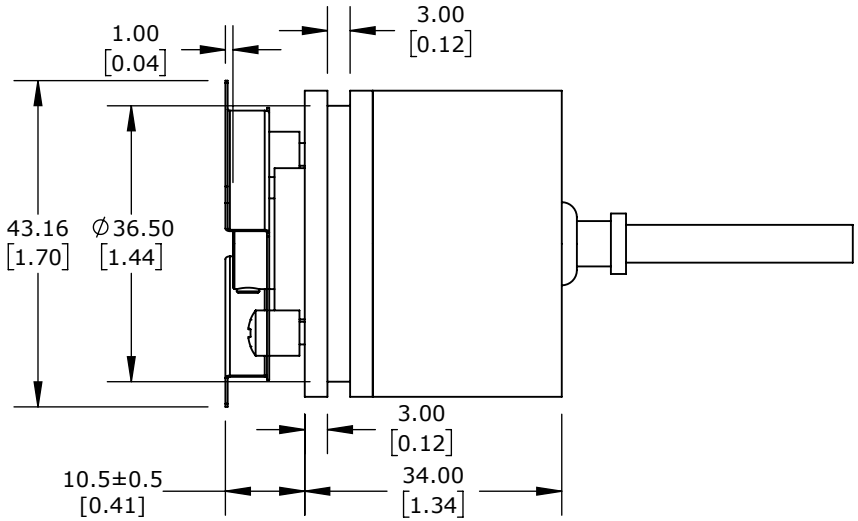

LIKA ELECTRONIC A41 SERIES INCREMENTAL (QUADRATURE) ROTARY ENCODER, MEDIUM DUTY, 5-30 VDC, AXIAL EXIT, UNIVERSAL (LINE DRIVER OR NPN/PNP OPEN COLLECTOR) OUTPUT, 4096 PPR, 1/4IN HOLLOW SHAFT, 41mm DIAMETER BODY, IP64, 6.5FT/2M CABLE LENGTH, PIGTAIL			A41H-4096-HZCP6-AL2				AutomationDirect.com 1-800-633-0405
3rd ANGLE	NOT TO SCALE	PART DIMENSIONS MAY DIFFER SLIGHTLY DUE TO MANUFACTURER'S VARIANCES	METRIC UNITS USED FOR PART DESIGN	UNLESS OTHERWISE SPECIFIED UNITS ARE:	**mm** **[inch]**	LATEST VERSION 10/28/2024	SHEET 1 OF 1