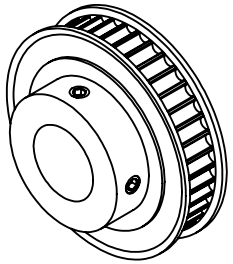

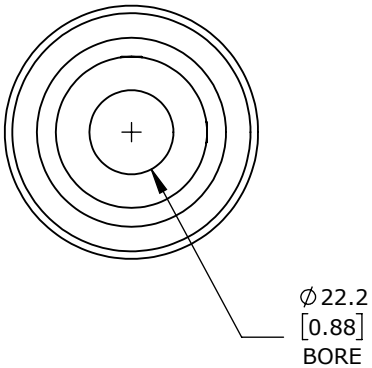

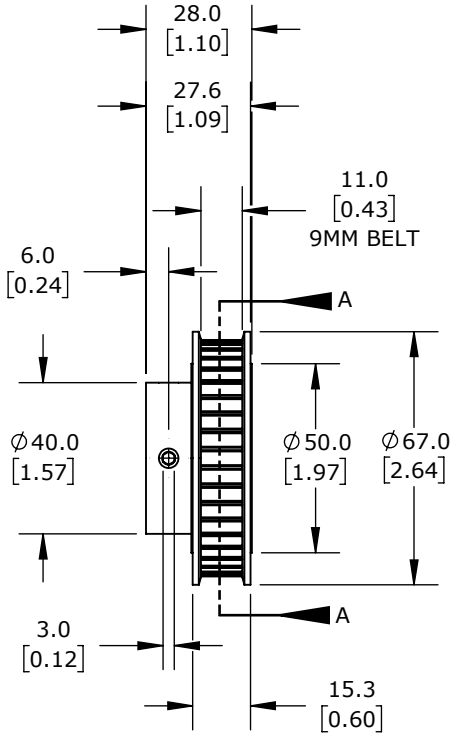

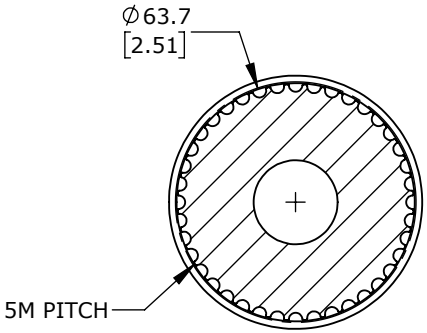

SECTION A-A

HARDWARE INCLUDED	
TYPE	QTY
M6-1.0 SET SCREW	2

TIMING PULLEY, 5M, 40 TOOTH				A40-5M10-SS-0875			AutomationDirect.com 1-800-633-0405
3rd ANGLE	NOT TO SCALE	PART DIMENSIONS MAY DIFFER SLIGHTLY DUE TO MANUFACTURER'S VARIANCES	METRIC UNITS USED FOR PART DESIGN	UNLESS OTHERWISE SPECIFIED UNITS ARE:	**mm [inch]**	LATEST VERSION 3/27/2024	SHEET 1 OF 1