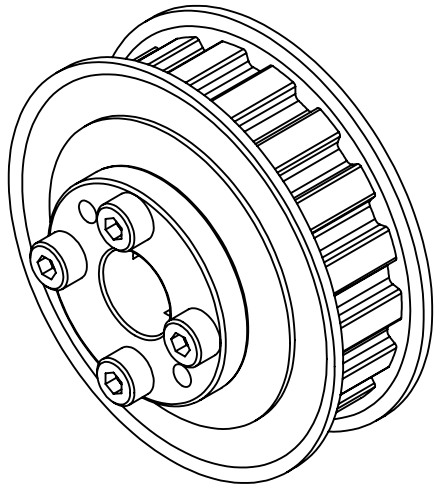

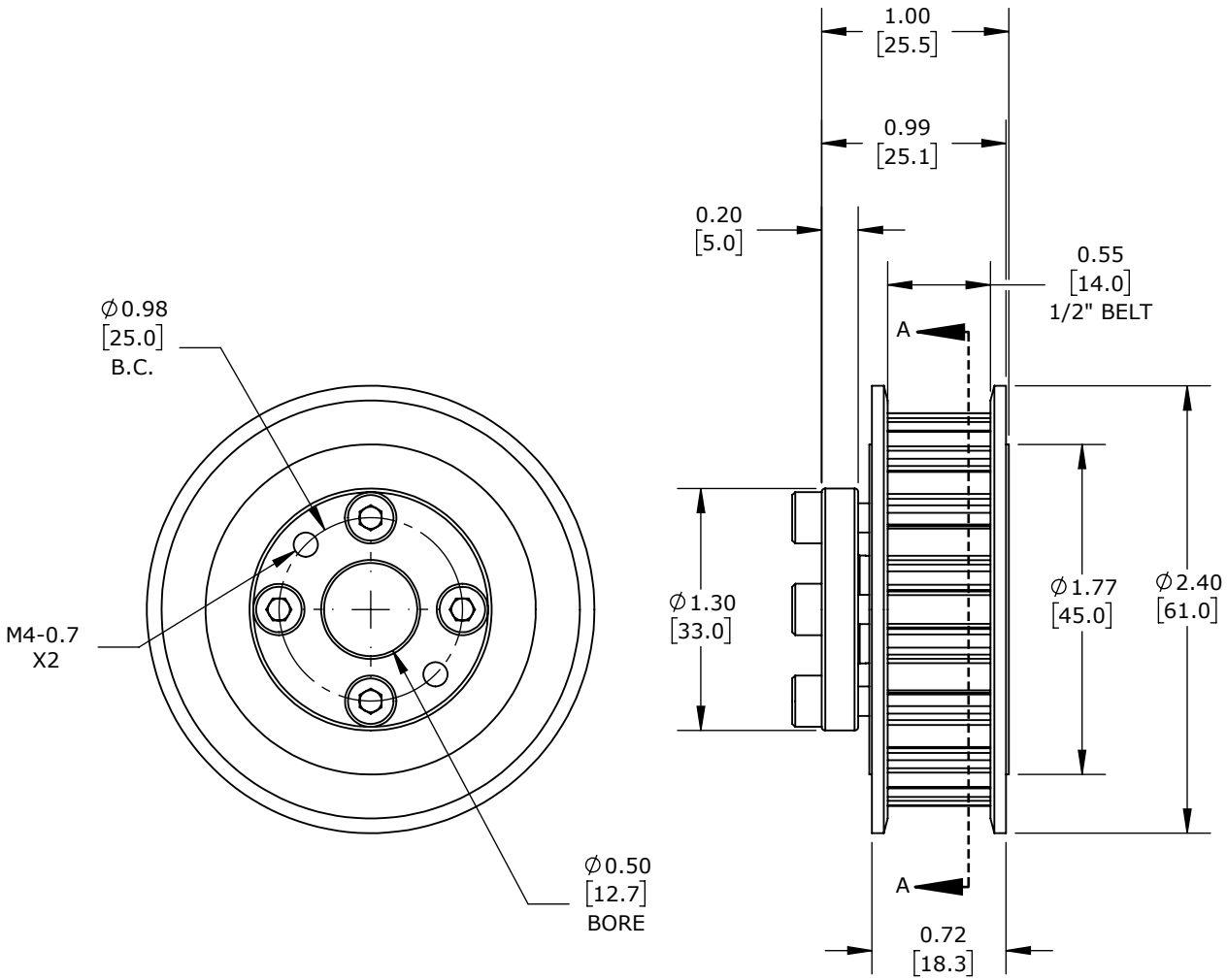

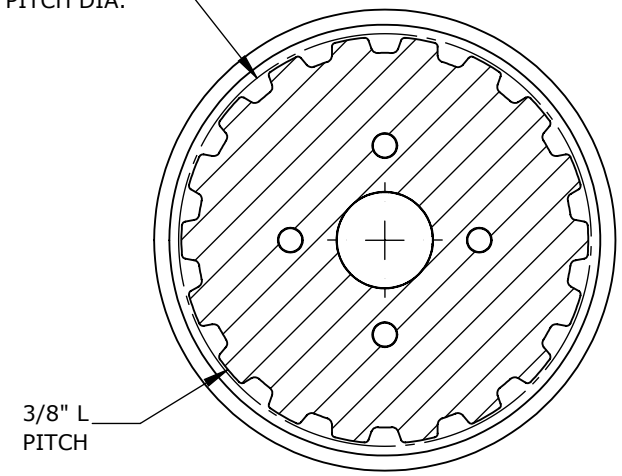

SECTION A-A

HARDWARE INCLUDED	
TYPE	QTY
M4-0.7 X 16MM SHCS	4
QD BUSHING	1

TIMING PULLEY, L PITCH, 18 TOOTH				A18-L050-SPBO-0500			AutomationDirect.com 1-800-633-0405
3rd ANGLE	NOT TO SCALE	PART DIMENSIONS MAY DIFFER SLIGHTLY DUE TO MANUFACTURER'S VARIANCES	INCH UNITS USED FOR PART DESIGN	UNLESS OTHERWISE SPECIFIED UNITS ARE:	**inch [mm]**	LATEST VERSION 3/27/2024	SHEET 1 OF 1