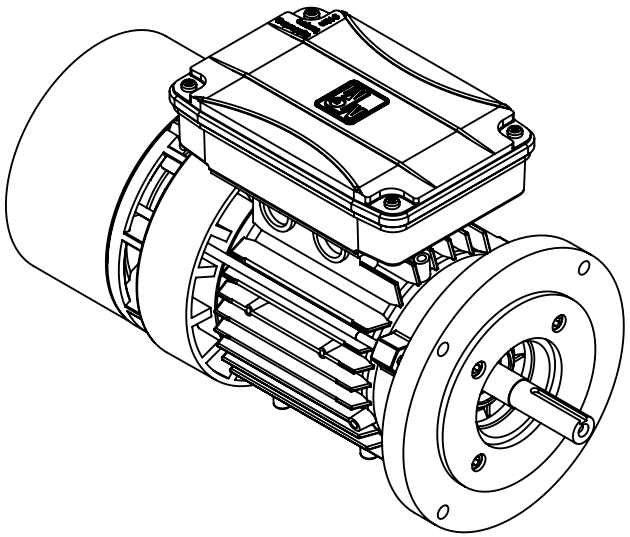

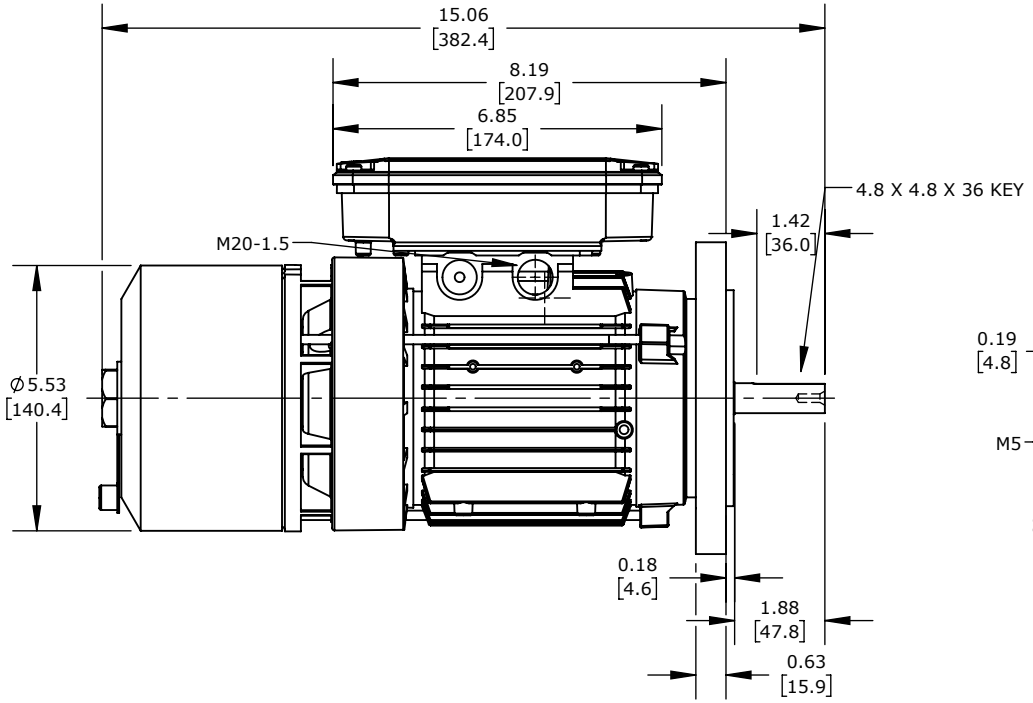

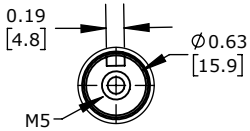

DETAIL A
SCALE 2:1

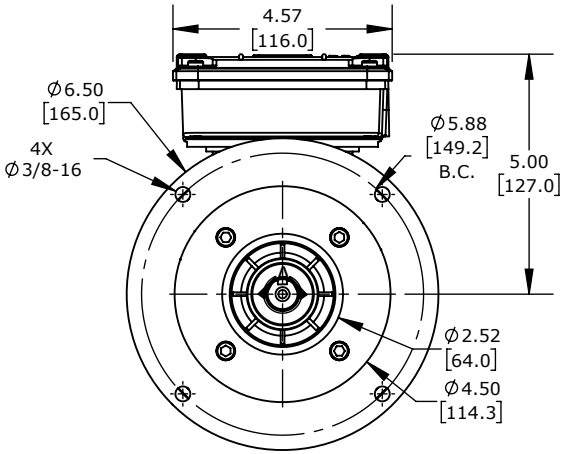

M.G.M. ELECTRIC MOTORS BAX IE2 HIGH EFFICIENCY AC INDUCTION MOTOR, GENERAL PURPOSE, INVERTER RATED AND BRAKE, 1/2HP, 3-PHASE, 230/460 VAC, 1800RPM, TEFC, IEC 71 (NEMA 56C FLANGE) FRAME, ALUMINUM, C-FACE MOUNT, INTEGRATED BRAKE ASSEMBLY INCLUDED			18I8				AutomationDirect.com 1-800-633-0405
3rd ANGLE	NOT TO SCALE	PART DIMENSIONS MAY DIFFER SLIGHTLY DUE TO MANUFACTURER'S VARIANCES	METRIC UNITS USED FOR PART DESIGN	UNLESS OTHERWISE SPECIFIED UNITS ARE:	**inch [mm]**	LATEST VERSION 6/3/2024	SHEET 1 OF 1