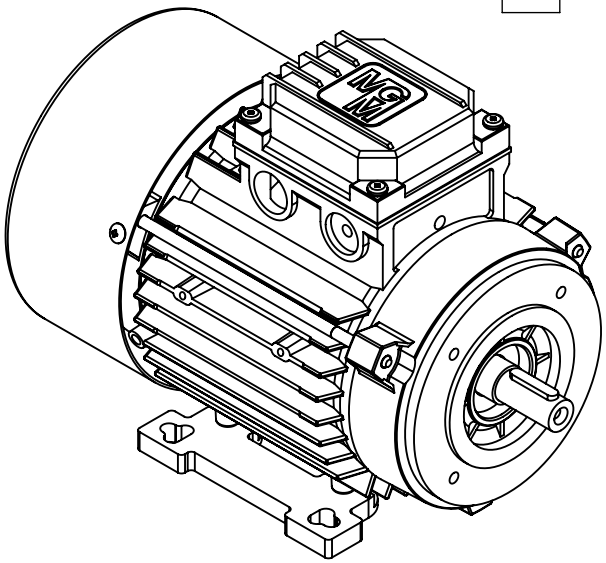

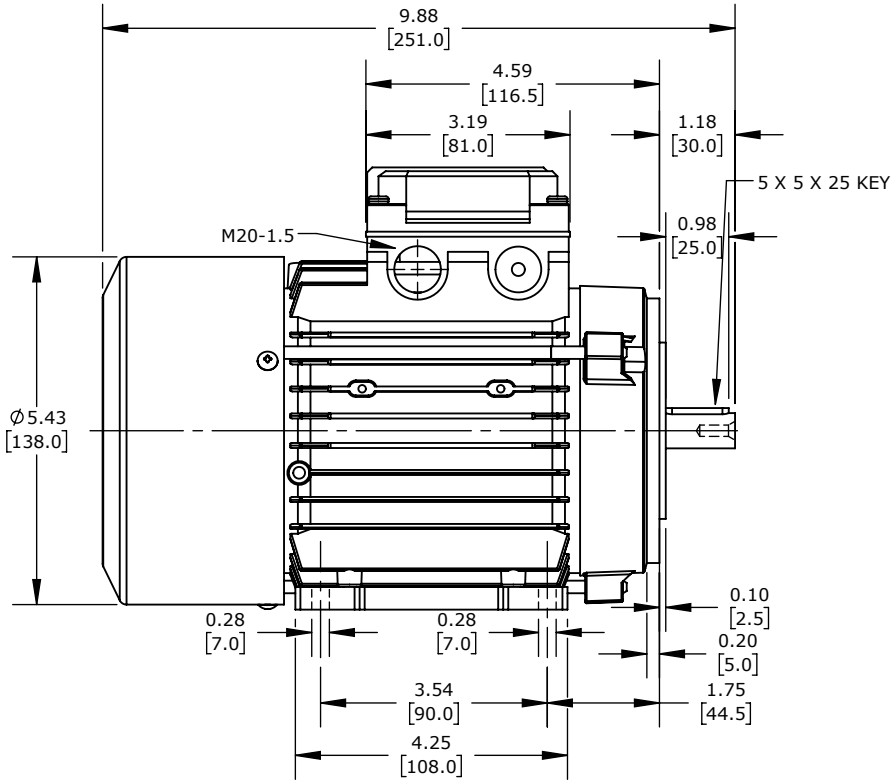

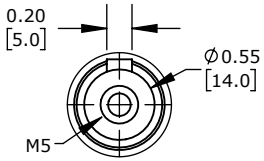

DETAIL A
SCALE 2:1

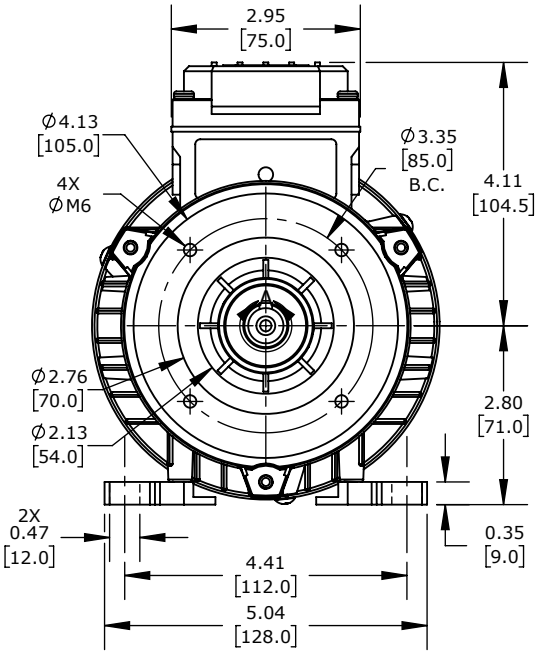

M.G.M. ELECTRIC MOTORS SMX IE2 HIGH EFFICIENCY AC INDUCTION MOTOR, GENERAL PURPOSE AND INVERTER RATED, 1/2HP, 3-PHASE, 230/460 VAC, 3600RPM, TEFC, IEC 71 FRAME, ALUMINUM, C-FACE/REMOVABLE RIGID BASE (B34) MOUNT			16SV				AutomationDirect.com 1-800-633-0405
3rd ANGLE	NOT TO SCALE	PART DIMENSIONS MAY DIFFER SLIGHTLY DUE TO MANUFACTURER'S VARIANCES	METRIC UNITS USED FOR PART DESIGN	UNLESS OTHERWISE SPECIFIED UNITS ARE:	**inch** **[mm]**	LATEST VERSION 6/4/2024	SHEET 1 OF 1