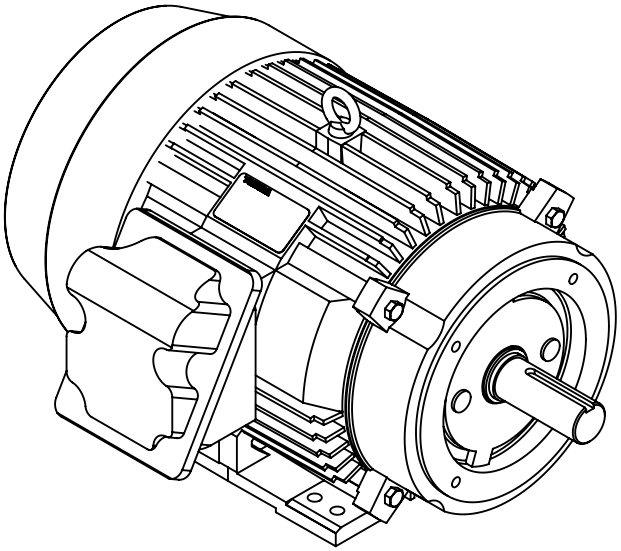

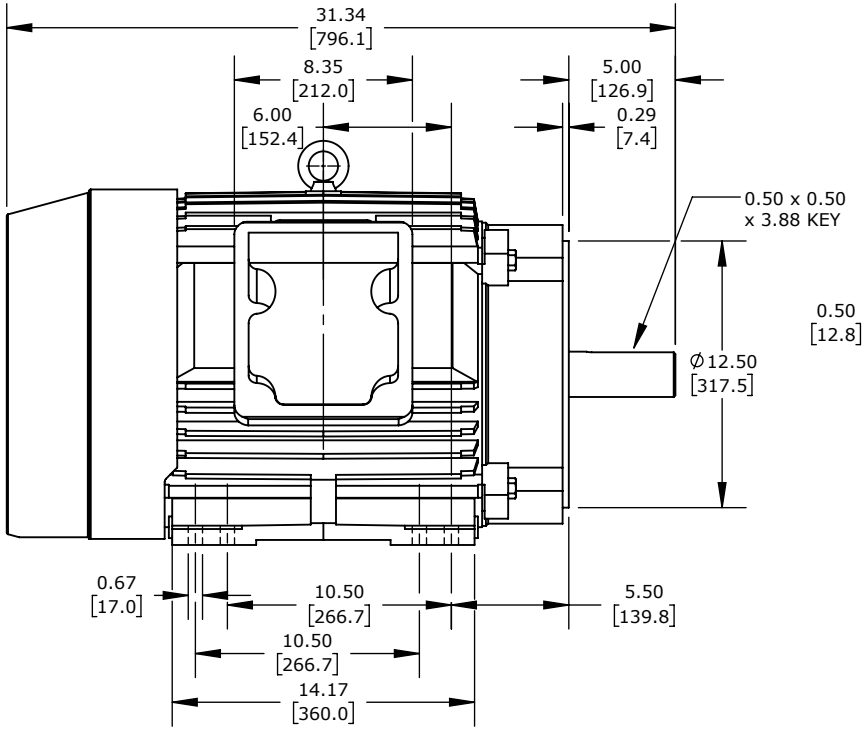

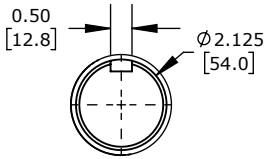

DETAIL A
SCALE 2:1

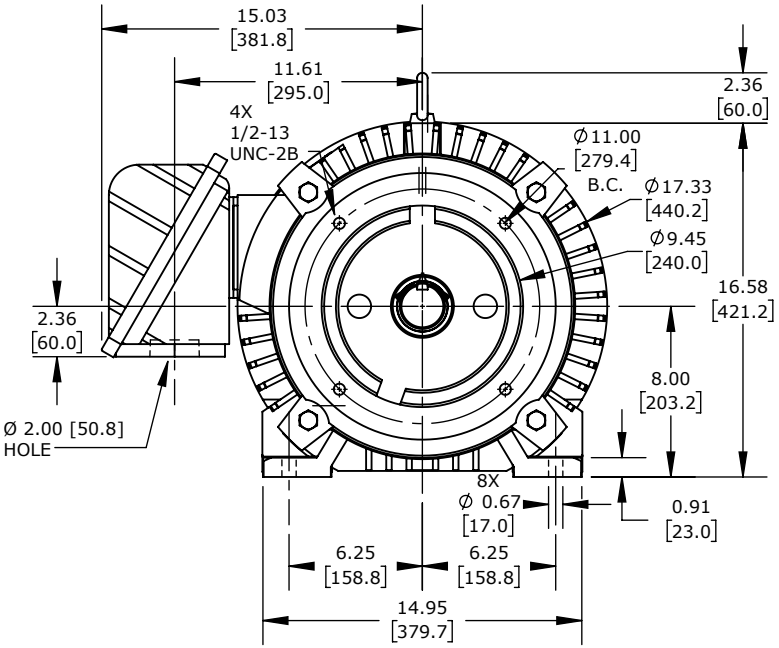

TOSHIBA SD SERIES PREMIUM EFFICIENCY AC INDUCTION MOTOR, GENERAL PURPOSE, INVERTER RATED & HAZARDOUS LOC, 50HP, 3-PH, 230/460 VAC, 1800RPM, TEFC, 326TC FRAME, CAST IRON, RIGID BASE/C-FACE MOUNT			0504SDSR42A-P				AutomationDirect.com 1-800-633-0405
3rd ANGLE	NOT TO SCALE	PART DIMENSIONS MAY DIFFER SLIGHTLY DUE TO MANUFACTURER'S VARIANCES	METRIC UNITS USED FOR PART DESIGN	UNLESS OTHERWISE SPECIFIED UNITS ARE:	**inch [mm]**	LATEST VERSION 6/21/2023	SHEET 1 OF 1