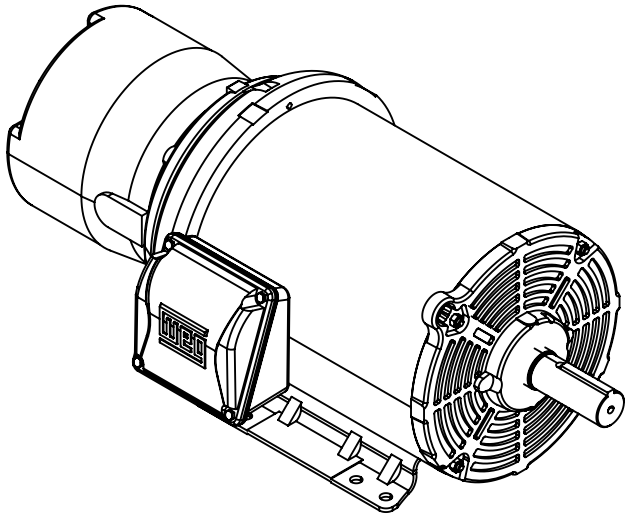

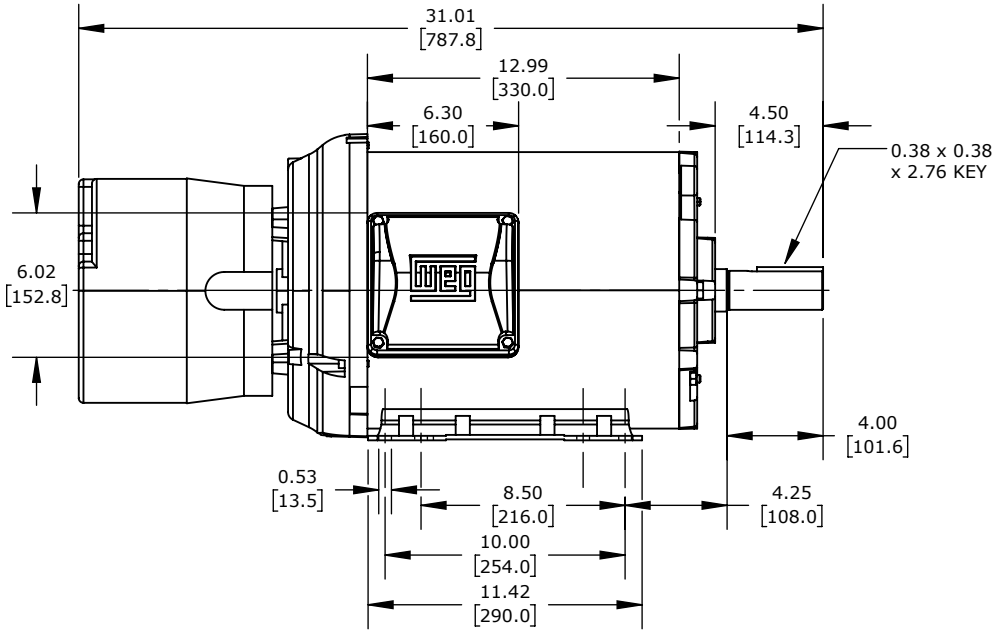

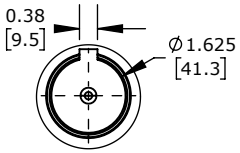

DETAIL A
SCALE 2:1

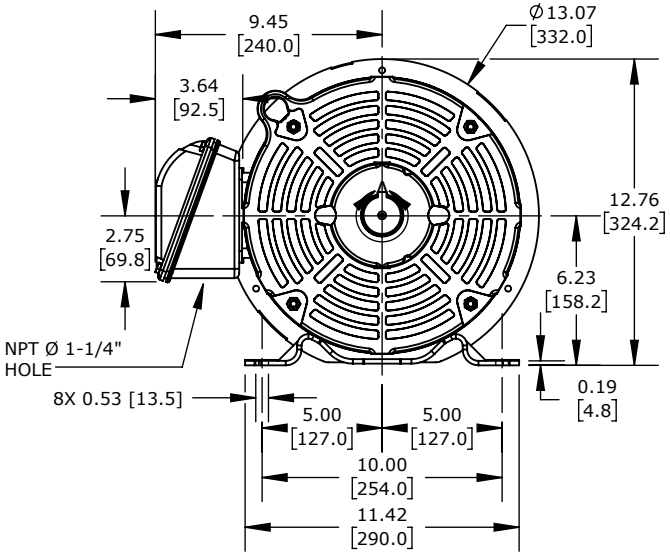

WEG ELECTRIC S PREMIUM EFFICIENCY AC INDUCTION MOTOR, GENERAL PURPOSE, INVERTER RATED & HAZARDOUS LOC & BRAKE, 15HP, 3-PH, 208-230/460 VAC, 1800RPM, TEFC, 254T FRAME, ROLLED STEEL, C-FACE /RIGID BASE MOUNT			01518ET3EBM254T-S				AutomationDirect.com 1-800-633-0405
3rd ANGLE	NOT TO SCALE	PART DIMENSIONS MAY DIFFER SLIGHTLY DUE TO MANUFACTURER'S VARIANCES	METRIC UNITS USED FOR PART DESIGN	UNLESS OTHERWISE SPECIFIED UNITS ARE:	**inch [mm]**	LATEST VERSION 2/14/2024	SHEET 1 OF 1