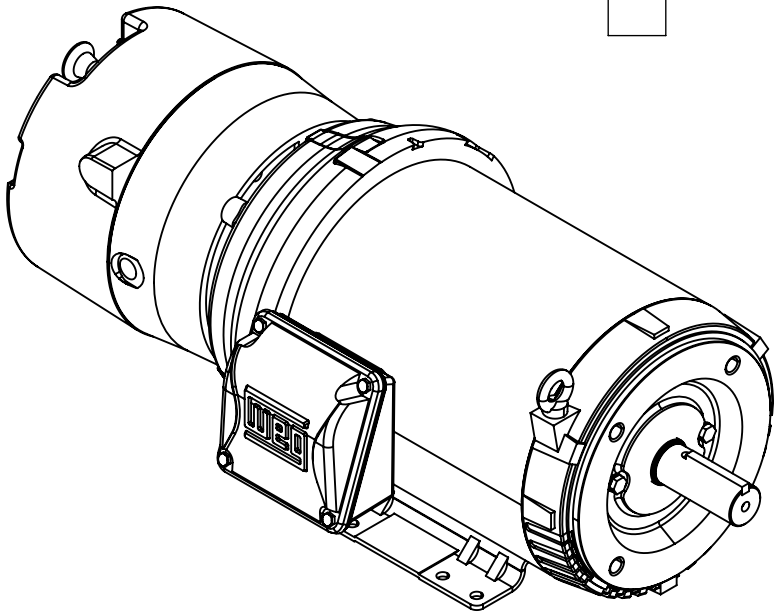

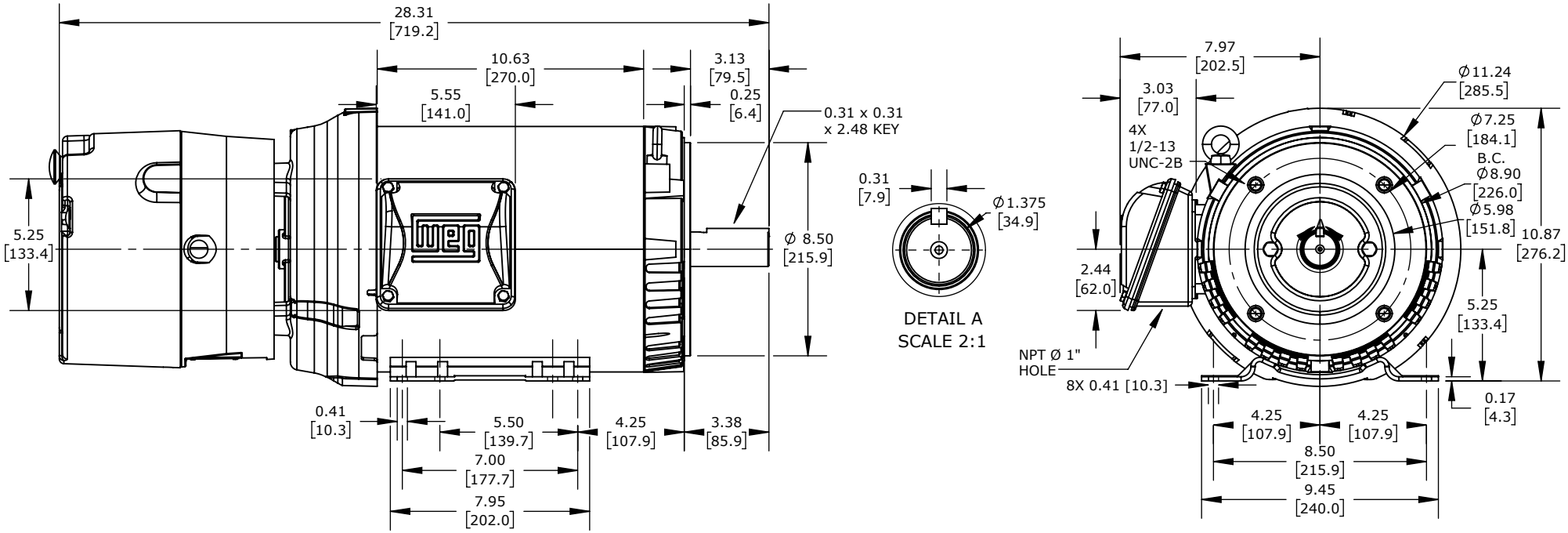

WEG ELECTRIC S PREMIUM EFFICIENCY AC INDUCTION MOTOR, GENERAL PURPOSE, INVERTER RATED & HAZARDOUS LOC & BRAKE, 10HP, 3-PH, 208-230/460 VAC, 1800RPM, TEFC, 215TC FRAME, ROLLED STEEL, C-FACE /RIGID BASE MOUNT				01018ET3EBM215TC-S			AutomationDirect.com 1-800-633-0405
3rd ANGLE	NOT TO SCALE	PART DIMENSIONS MAY DIFFER SLIGHTLY DUE TO MANUFACTURER'S VARIANCES	METRIC UNITS USED FOR PART DESIGN	UNLESS OTHERWISE SPECIFIED UNITS ARE:	**inch** **[mm]**	LATEST VERSION 4/30/2024	SHEET 1 OF 1