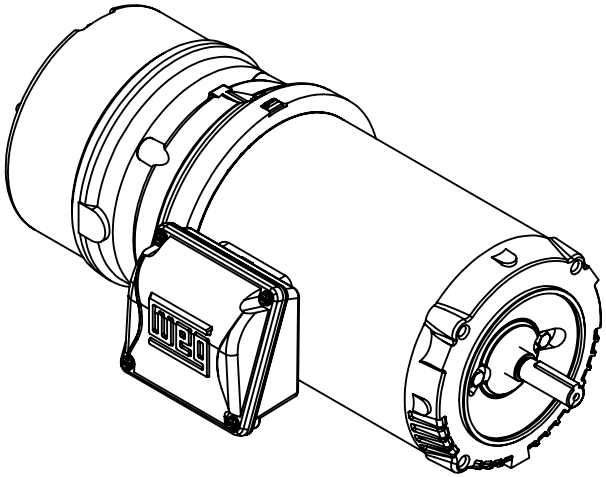

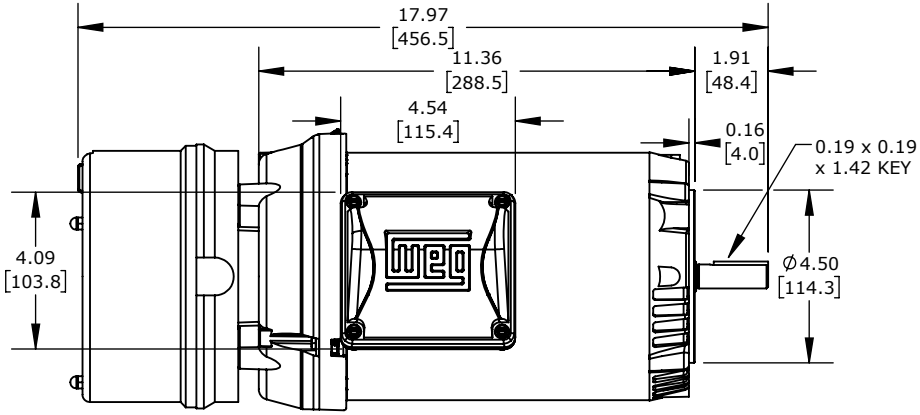

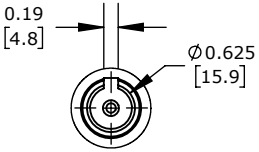

DETAIL A
SCALE 2:1

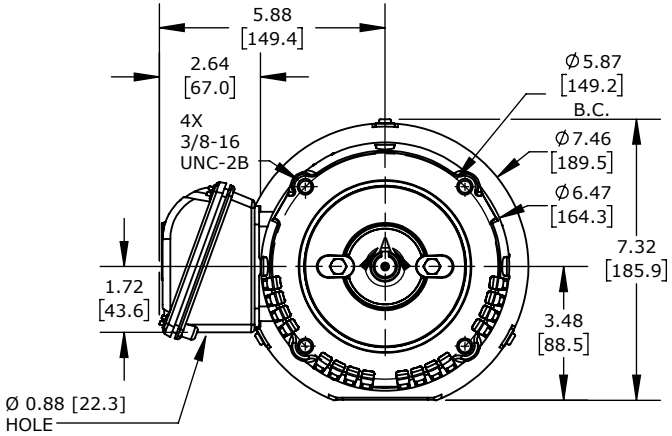

WEG ELECTRIC S SERIES STANDARD EFFICIENCY AC INDUCTION MOTOR, WITH BRAKE, GENERAL PURPOSE, INVERTER RATED, 1HP, 3-PH, 208-230/460 VAC, 1800RPM, TEFC, 56C FRAME, ROLLED STEEL, C-FACE ONLY MOUNT, STEARMS 105602100BQF BRAKE ASSEMBLY INCLUDED			00118ET3EBM56CFL-S				AutomationDirect.com 1-800-633-0405
3rd ANGLE	NOT TO SCALE	PART DIMENSIONS MAY DIFFER SLIGHTLY DUE TO MANUFACTURER'S VARIANCES	METRIC UNITS USED FOR PART DESIGN	UNLESS OTHERWISE SPECIFIED UNITS ARE:	**inch** **[mm]**	LATEST VERSION 1/10/2023	SHEET 1 OF 1