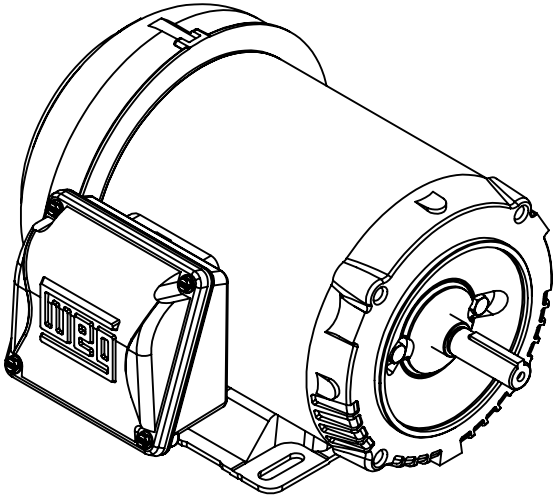

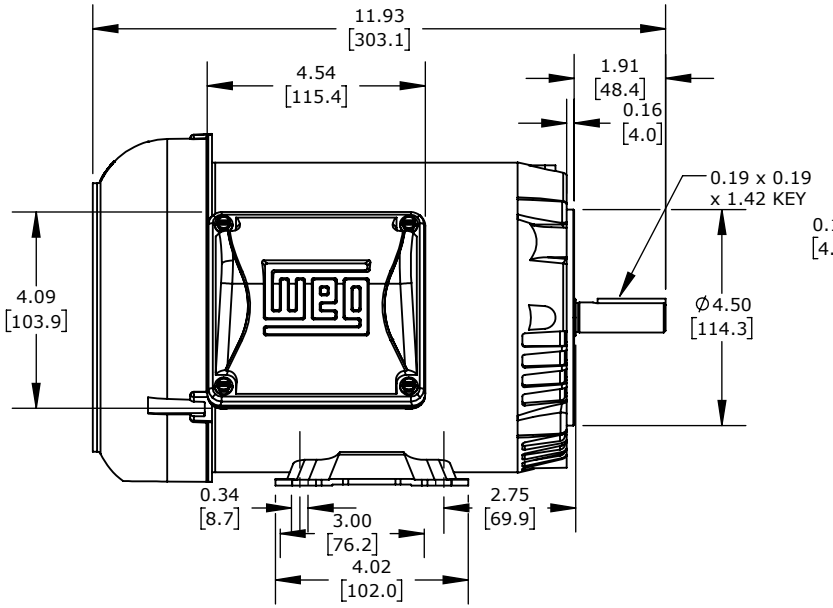

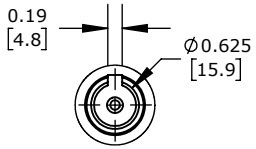

DETAIL A
SCALE 2:1

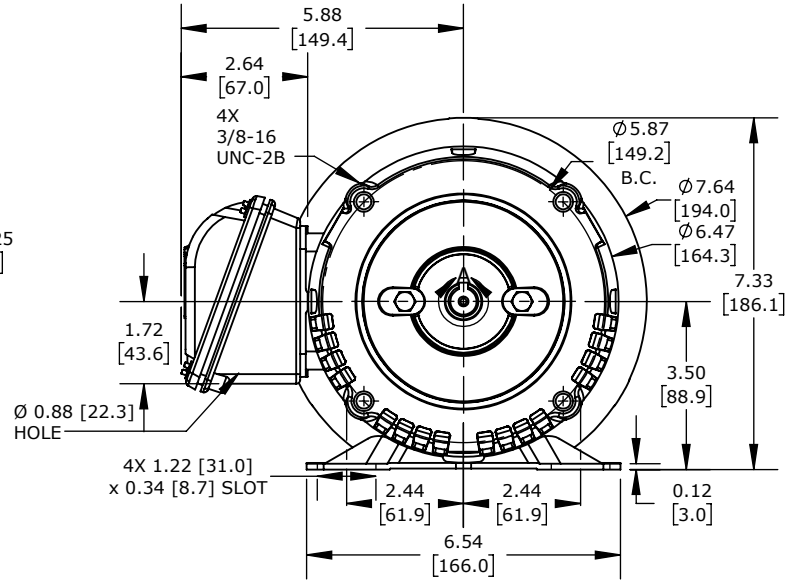

WEG ELECTRIC S SERIES STANDARD EFFICIENCY AC INDUCTION MOTOR, GENERAL PURPOSE, INVERTER RATED & HAZARDOUS LOC, 3/4HP, 3-PH, 208-230/460 VAC, 1800RPM, TEFC, 56C FRAME, ROLLED STEEL, RIGID BASE/C-FACE MOUNT			.7518ES3E56C-S				AutomationDirect.com 1-800-633-0405
3rd ANGLE	NOT TO SCALE	PART DIMENSIONS MAY DIFFER SLIGHTLY DUE TO MANUFACTURER'S VARIANCES	METRIC UNITS USED FOR PART DESIGN	UNLESS OTHERWISE SPECIFIED UNITS ARE:	**inch** **[mm]**	LATEST VERSION 12/7/2022	SHEET 1 OF 1