AutomationDirect Controllers and *ZIP*Links

Modules

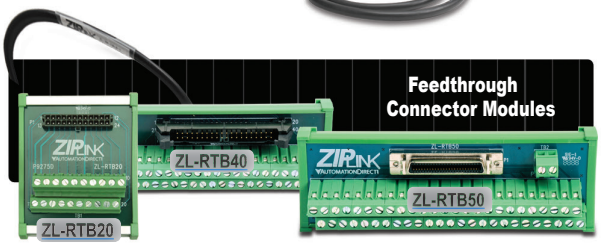

Feedthrough modules provide low-cost and compact field wiring screw termination solutions for quickly connecting Link cables with PLCs.

Fuse modules provide a means to add fuse protection to PLC output devices. The 16 and 32 point fuse modules provide easy accessible fuse holders that accept standard 5x20 mm fuses. Fuses not included.

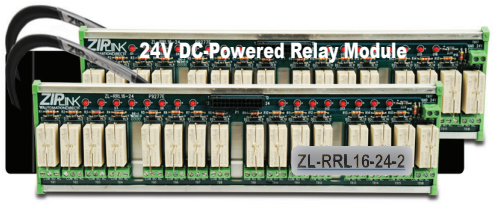

ZL-RRL16-24-1 (sink and source models available)

Our DC-powered relay module provides isolation, switches high current (10A) loads, is offered in 16 points, and includes diode protection to prevent voltage spikes at the relay coil from damaging connected PLC I/O

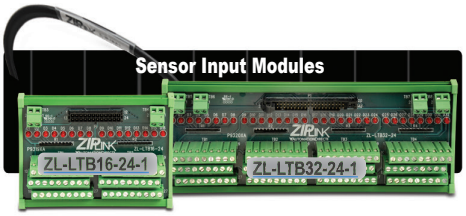

LED modules provide simple and logical termination for 3-wire sensors or other devices. These modules offer visual LED indication of device input status for quick troubleshooting. The LED/sensor modules are available in 16 and 32-point versions.

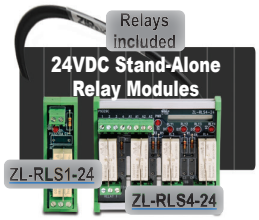

24 VDC stand-alone relay modules use plug-in relays for switching high current (10A) loads.

120 VAC Stand alone relay modules use plug-in relays for switching high current (10A) loads.

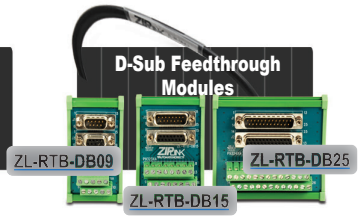

These connector modules provide a fast and convenient method of transitioning between D-Sub connectors and field wiring devices.

The RJ12 feedthrough module provides convenient break-out of wiring to terminal blocks.

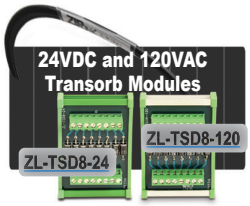

8-channel devices used to suppress counter-electromotive force (CEMF) generated by switching inductive loads which can cause unexpected PLC system shutdown.

The RJ12 multi-port distribution modules allow for fast and convenient RS485 multi-drop connections.

Communication adaptors eliminate the hassle associated with connecting crimp or solder connectors to PLC communication ports.

Modules mount on 35mm DIN rail part # DN-R35S1 or 15mm DIN rail (part #DN-R15S1).

See DIN Rail and Accessories earlier in this section

Cables

• Pre-wired • Ready-to-wire • D-Subminiature • and more!

ZIPLink cables are available in a number of pre-wired and ready-to-wire configurations that accommodate the majority of our PLC I/O modules.

Wiring Solutions

Wiring Solutions using the *ZIP*Link Wiring System

ZIPLinks eliminate the normally tedious process of wiring between devices by utilizing pre-wired cables and DIN rail mount connector modules. It's as simple as plugging in a cable connector at either end or terminating wires at only one end. Pre-wired cables keep installation clean and efficient, using half the space at a fraction of the cost of standard terminal blocks. There are several wiring solutions available when using the ***ZIP***Link System ranging from PLC I/O-to-***ZIP***Link Connector Modules that are ready for field termination, options for connecting to third party devices, GS, DuraPulse and SureServo Drives, as well as special relay, transorb and communications modules. Pre-printed I/O-specific adhesive label strips for quick marking of ***ZIP***Link modules are provided with ***ZIP***Link cables. See the following solutions to help determine the best ***ZIP***Link system for your application.

Solution 1: Do-more, DirectLOGIC, CLICK and Productivity Series I/O Modules to ZIPLink Connector Modules

When looking for quick and easy I/O-to-field termination, a ***ZIP***Link connector module used in conjunction with a prewired ***ZIP***Link cable, consisting of an I/O terminal block at one end and a multi-pin connector at the other end, is the best solution.

Using the PLC I/O Modules to ***ZIP***Link Connector Modules selector tables located in this section,

1. Locate your I/O module/PLC
2. Select a ***ZIP***Link Module
3. Select a corresponding ***ZIP***Link Cable.

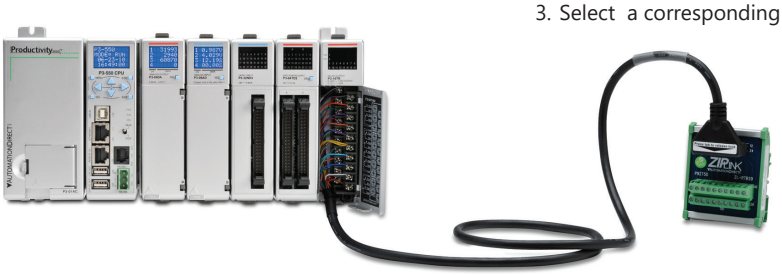

Solution 2: Do-more, DirectLOGIC, CLICK and Productivity Series I/O Modules to 3rd Party Devices

When wanting to connect I/O to another device within proximity of the I/O modules, no extra terminal blocks are necessary when using the ***ZIP***Link Pigtail Cables. ***ZIP***Link Pigtail Cables are prewired to an I/O terminal block with color-coded pigtail with soldered-tip wires on the other end.

Using the I/O Modules to 3rd Party Devices selector tables located in this section,

1. Locate your PLC I/O module
2. Select a ***ZIP***Link Pigtail Cable that is compatible with your 3rd party device.

Solution 3: GS Series and DuraPulse Drives Communication Cables

Need to communicate via Modbus RTU to a drive or a network of drives?

ZIPLink cables are available in a wide range of configurations for connecting to PLCs and SureServo, SureStep, Stellar Soft Starter and AC drives. Add a ***ZIP***Link communications module to quickly and easily set up a multi-device network.

Using the Drives Communication selector tables located in this section,

1. Locate your Drive and type of communications
2. Select a ***ZIP***Link cable and other associated hardware.

ZIPLink Wiring Solutions

Solution 4: Serial Communications Cables

ZIPLink offers communications cables for use with DirectLOGIC, CLICK, and Productivity CPUs, that can also be used with other communications devices. Connections include a 6-pin RJ12 or 9-pin, 15-pin and 25-pin D-sub connectors which can be used in conjunction with the RJ12 or D-Sub feedthrough modules.

Using the Serial Communications Cables selector table located in this section,

1. Locate your connector type
2. Select a cable.

Solution 5: Specialty ZIPLink Modules

For additional application solutions, ***ZIP***Link modules are available in a variety of configurations including stand-alone relays, 24VDC and 120VAC transorb modules, D-sub, RJ12 and RJ45 feedthrough modules, communication port adapter and distribution modules, and SureServo 50-pin I/O interface connection.

Using the ***ZIP***Link Specialty Modules selector table located in this section,

1. Locate the type of application
2. Select a ***ZIP***Link module.

Solution 6: ZIPLink Connector Modules to 3rd Party Devices

If you need a way to connect your device to terminal blocks without all that wiring time, then our pigtail cables with color coded soldered tip wires are a good solution. Used in conjunction with any compatible ***ZIP***Link Connector Modules, a pigtail cable keeps wiring clean and easy and reduces troubleshooting time.

Using the Universal Connector Modules and Pigtail Cables table located in this section,

1. Select module type
2. Select the number of pins
3. Select cable.

CPU I/O Modules to *ZIP*Link Connector Modules – BRX MPUs

Note: In each table below select the length of cable as follows: (Blank) = 0.5 m, -1 = 1.0 m, -2 = 2.0 m.

BX 36/36E MPUs *ZIP*Link Selector			
Part No.	***Feedthrough Modules***	***Cable Part No.****	***Max Qty Needed***
BX-DM1-36ED1	ZL-RTB20 (Standard) OR ZL-RTB20-1 (Compact)	ZL-BX-CBL15 ZL-BX-CBL15-1 ZL-BX-CBL15-2	4
BX-DM1-36ED1-D			
BX-DM1-36ED2			
BX-DM1-36ED2-D			
BX-DM1-36ER **			
BX-DM1-36ER-D **			
BX-DM1-36AR**			
BX-DM1E-36ED13			
BX-DM1E-36ED13-D			
BX-DM1E-36ED23			
BX-DM1E-36ED23-D			
BX-DM1E-36ER3 **			
BX-DM1E-36ER3-D **			
BX-DM1E-36AR3 **			

** Cable Length: Blank = 0.5 m, -1 = 1.0 m, or -2 = 2.0 m.*
*** The relay outputs are derated not to exceed 2A per common when used with the ZIPLink wiring system.*

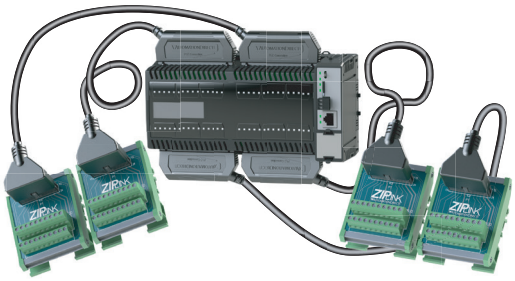

BX 18/18E MPUs *ZIP*Link Selector			
Part Number	***Feedthrough Modules***	***Cable Part No.****	***Max Qty Needed***
BX-DM1-18ED1	ZL-RTB20 (Standard) OR ZL-RTB20-1 (Compact)	ZL-BX-CBL15 ZL-BX-CBL15-1 ZL-BX-CBL15-2	2
BX-DM1-18ED1-D			
BX-DM1-18ED2			
BX-DM1-18ED2-D			
BX-DM1-18ER**			
BX-DM1-18ER-D**			
BX-DM1-18AR**			
BX-DM1E-18ED13			
BX-DM1E-18ED13-D			
BX-DM1E-18ED23			
BX-DM1E-18ED23-D			
BX-DM1E-18ER3**			
BX-DM1E-18ER3-D**			
BX-DM1E-18AR3**			

** Cable Length: Blank = 0.5 m, -1 = 1.0 m, or -2 = 2.0 m.*
*** The relay outputs are derated not to exceed 2A per common when used with the ZIPLink wiring system.*

BX 10/10E MPUs *ZIP*Link Selector			
Part Number	***Feedthrough Modules***	***Cable Part No.****	***Max Qty Needed***
BX-DM1-10ED1-D	ZL-RTB20 (Standard) OR ZL-RTB20-1 (Compact)	ZL-BX-CBL20 ZL-BX-CBL20-1 ZL-BX-CBL20-2	1
BX-DM1-10ED2-D			
BX-DM1-10ER-D**			
BX-DM1-10AR-D**			
BX-DM1E-10ED13-D			
BX-DM1E-10ED23-D			
BX-DM1E-10ER3-D**			
BX-DM1E-10AR3-D**			

** Cable Length: Blank = 0.5 m, -1 = 1.0 m, or -2 = 2.0 m.*
*** The relay outputs are derated not to exceed 2A per common when used with the ZIPLink wiring system.*

CPU I/O Modules to ZIPLink Connector Modules - BRX Expansion Modules

Note: In each table below select the length of cable as follows: (Blank) = 0.5 m, -1 = 1.0 m, -2 = 2.0 m.

8-Point BRX Digital Expansion Module *ZIP*Link Selector			
Expansion Module Part No.	***Feedthrough Modules***	***Cable Part No.****	***Qty Needed***
BX-08ND3	ZL-RTB20 (Standard) OR ZL-RTB20-1 (Compact)	ZL-BXEM-CBL10 ZL-BXEM-CBL10-1 ZL-BXEM-CBL10-2	1
BX-08NF3			
BX-08NA			
BX-08NB			
BX-08TD1			
BX-08TD2			
BX-08TR*			
BX-08TRZ*			
BX-08TA			
BX-08CD3R*			

** Cable Length: Blank = 0.5 m, -1 = 1.0 m, or -2 = 2.0 m.*
*** The relay outputs are derated not to exceed 2A per common when used with the ZIPLink wiring system.*

12- & 5-Point BRX Digital Expansion Module *ZIP*Link Selector			
Expansion Module Part No.	***Feedthrough Modules***	***Cable Part No.****	***Qty Needed***
BX-12ND3	ZL-RTB20 (Standard) OR ZL-RTB20-1 (Compact)	ZL-BXEM-CBL15 ZL-BXEM-CBL15-1 ZL-BXEM-CBL15-2	1
BX-12NA			
BX-12NB			
BX-12TD1			
BX-12TD2			
BX-12TR*			
BX-05TRS			
BX-12TA			
BX-12CD3D1			
BX-12CD3D2			

** Cable Length: Blank = 0.5 m, -1 = 1.0 m, or -2 = 2.0 m.*
*** The relay outputs are derated not to exceed 2A per common when used with the ZIPLink wiring system.*

BRX 16-Point and 32-Point Discrete Expansion Module *ZIP*Link selection tables are shown on next page.

8-Point BRX Digital Expansion Module *ZIP*Link Selector			
Expansion Module Part No.	***Feedthrough Modules***	***Cable Part No.****	***Qty Needed***
BX-HSIO4	ZL-RTB40 (Standard) OR ZL-RTB40-1 (Compact)	ZL-BX-CBL40-S ZL-BX-CBL40-1S	1

BRX CPU with expansion modules and ZIPLink ZL-RTB20 feedthrough module.

BRX Analog Expansion Module *ZIP*Link Selector			
Expansion Module Part No.	***Feedthrough Modules***	***Cable Part No.****	***Qty Needed***
BX-04ADM-1	ZL-RTB20 (Standard) OR ZL-RTB20-1 (Compact)	ZL-BXEM-CBL20 ZL-BXEM-CBL20-1 ZL-BXEM-CBL20-2	1
BX-04AD-1			
BX-04AD-2B			
BX-08AD-1			
BX-08AD-2B			
BX-08AD-3		ZL-BXEM-CBL10	
BX-04DA-1		ZL-BXEM-CBL20 ZL-BXEM-CBL20-1 ZL-BXEM-CBL20-2	
BX-04DA-2B			
BX-08DA-1			
BX-08DA-2B			
BS-08DA-3		ZL-BXEM-CBL10	
BX-16DA-1		ZL-BXEM-CBL20 ZL-BXEM-CBL20-1 ZL-BXEM-CBL20-2	
BX-16DA-2B			
BX-2AD2DA-1			
BX-4AD2DA-1			
BX-2AD2DA-2B			
BX-4AD2DA-2B			
BX-4AD4DA-3		ZL-BXEM-CBL10	
BX-04THM	Temperature Input modules are not supported by the ***ZIP***Link wiring system.		
BX-08THM			
BX-06RTD			
BX-08NTC			
BX-4THM4DA-1			
BX-4RTD4DA-1			

** Cable Length: Blank = 0.5 m, -1 = 1.0 m, or -2 = 2.0 m.*

CPU I/O Modules to ZIPLink Connector Modules - BRX Expansion Modules

Note: In each table below select the length of cable as follows: (Blank) = 0.5 m, -1 = 1.0 m, -2 = 2.0 m.

16-Point BRX Expansion Module *ZIP*Link Selector				
Expansion Module Part	***# of Terms***	***Component***	***Part No.***	***Cable Part No.****
BX-16ND3	18	Sensor	ZL-LTB16-24-1	ZL-BXEM-CBL20 ZL-BXEM-CBL20-1 ZL-BXEM-CBL20-2
BX-16NF3		Feedthrough	ZL-RTB20 (Standard) OR ZL-RTB20-1 (Compact)	
BX-16NA				
BX-16NB				
BX-16TD1		Feedthrough		
		Relay (Sinking)	ZL-RRL16-24-1 ZL-RRL16W-24-1 ZL-RRL16F-24-1	
BX-16TD2		Feedthrough	ZL-RTB20 (Standard) OR ZL-RTB20-1 (Compact)	
		Relay (Sourcing)	ZL-RRL16-24-2 ZL-RRL16W-24-2 ZL-RRL16F-24-2	
BX-16TF2		Feedthrough	ZL-RTB20 (Standard) OR ZL-RTB20-1 (Compact)	
BX-16TR**				
BX-16TRZ**				
BX-16CD3D1				
BX-16CD3D2				
BX-16CF3F2				

** Cable Length: Blank = 0.5 m, -1 = 1.0 m, or -2 = 2.0 m.*
*** The relay outputs are derated not to exceed 2A per common when used with the ZIPLink wiring system.*

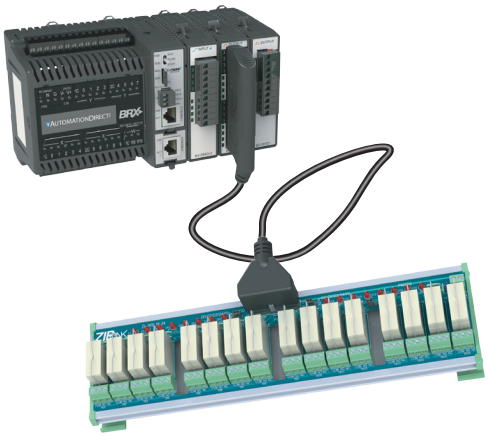

BRX CPU with expansion modules and ZIPLink ZL-RRL16-24-1 relay module.

32-Point BRX Expansion Module *ZIP*Link Selector				
Expansion Module Part No.	***Component***	***Part No.***	***Cable Part No.****	***Qty Needed***
BX-32ND3	Sensor	ZL-LTB32-24-1	ZL-D24-CBL40 ZL-D24-CBL40-1 ZL-D24-CBL40-2 ZL-D24-CBL40-1XP ZL-D24-CBL40-2XP ZL-D24-CBL40-2P	1
	Feedthrough	ZL-RTB40 (Standard) OR ZL-RTB40-1 (Compact)		
BX-32TD1	Feedthrough			
BX-32TD2				

** Select the cable length: Blank = 0.5 m, -1 = 1.0 m, -2 = 2.0 m.*
Suffix -X indicates 45° cable connector angle. Non -X indicates 180° cable connector angle.

CPU I/O Modules to *ZIP*Link Connector Modules – CLICK

Note: In each table below select the length of cable as follows: (Blank) = 0.5 m, -1 = 1.0 m, -2 = 2.0 m.

CLICK CPU Module *ZIP*Link Selector				
CPU Module	***ZIPLink***			
	# of Terms	***Component***	***Module Part No.***	***Cable Part No.***
C0-00DD1-D	20	Feedthrough	ZL-RTB20 (-1)	ZL-C0-CBL20 ZL-C0-CBL20-1 ZL-C0-CBL20-2
C0-00DD2-D				
C0-00DR-D				
C0-00AR-D				
C0-01DD1-D				
C0-01DD2-D				
C0-01DR-D				
C0-01AR-D				
Analog CPUs	No ***ZIP***Links are available for analog CPU modules.			

CLICK Ethernet CPU Module *ZIP*Link Selector				
CPU Module	***ZIPLink***			
	# of Terms	***Component***	***Module Part No.***	***Cable Part No.***
C0-10DD1E-D	20	Feedthrough	ZL-RTB20 (-1)	ZL-C0-CBL20 ZL-C0-CBL20-1 ZL-C0-CBL20-2
C0-10DD2E-D				
C0-10DRE-D				
C0-10ARE-D				
C0-11DD1E-D				
C0-11DD2E-D				
C0-11DRE-D				
C0-11ARE-D				
Analog CPUs	No ***ZIP***Links are available for analog CPU modules.			

Note: ***ZIP***Link Connector Module specifications follow the Compatibility Matrix tables. ***ZIP***Link Cable specifications are at the end of this ***ZIP***Link section.

CPU I/O Modules to *ZIP*Link Connector Modules – CLICK

Note: In each table below select the length of cable as follows: (Blank) = 0.5 m, -1 = 1.0 m, -2 = 2.0 m.

CLICK CPU Discrete Input Module *ZIP*Link Selector

I/O Input Module	ZIPLink # of Terms	ZIPLink Component	ZIPLink Module Part No.	ZIPLink Cable Part No.
C0-08ND3	11	Feedthrough	ZL-RTB20 (-1)	ZL-C0-CBL11 ZL-C0-CBL11-1 ZL-C0-CBL11-2
C0-08ND3-1				
C0-08NE3				
C0-08NA				
C0-16ND3	20	Feedthrough	ZL-RTB20 (-1)	ZL-C0-CBL20 ZL-C0-CBL20-1 ZL-C0-CBL20-2
		Sensor	ZL-LTB16-24-1	
C0-16NE3		Feedthrough	ZL-RTB20 (-1)	
		Sensor	ZL-LTB16-24-1	

CLICK CPU Combo I/O Module *ZIP*Link Selector

I/O Combo Module	ZIPLink # of Terms	ZIPLink Component	ZIPLink Module Part No.	ZIPLink Cable Part No.
C0-16CDD1	20	Feedthrough	ZL-RTB20 (-1)	ZL-C0-CBL20 ZL-C0-CBL20-1 ZL-C0-CBL20-2
C0-16CDD2				
C0-08CDR	11			ZL-C0-CBL11 ZL-C0-CBL11-1 ZL-C0-CBL11-2

CLICK CPU Analog I/O Module *ZIP*Link Selector

I/O Analog Module	ZIPLink # of Terms	ZIPLink Component	ZIPLink Module Part No.	ZIPLink Cable Part No.
C0-04AD-1	11	Feedthrough	ZL-RTB20 (-1)	ZL-C0-CBL11 ZL-C0-CBL11-1 ZL-C0-CBL11-2
C0-04AD-2				
C0-04RTD	20	No *ZIP*Links are available for RTD and thermocouple modules.		
C0-04THM	11			
C0-04DA-1	11	Feedthrough	ZL-RTB20 (-1)	ZL-C0-CBL11 ZL-C0-CBL11-1 ZL-C0-CBL11-2
C0-04DA-2				
C0-4AD2DA-1	20			ZL-C0-CBL20 ZL-C0-CBL20-1 ZL-C0-CBL20-2
C0-4AD2DA-2				

CLICK CPU Discrete Output Module *ZIP*Link Selector

I/O Output Module	ZIPLink # of Terms	ZIPLink Component	ZIPLink Module Part No.	ZIPLink Cable Part No.
C0-08TD1	11	Feedthrough	ZL-RTB20 (-1)	ZL-C0-CBL11 ZL-C0-CBL11-1 ZL-C0-CBL11-2
C0-08TD2				
C0-08TR				
C0-08TA				
C0-16TD1	20	Feedthrough		ZL-C0-CBL20 ZL-C0-CBL20-1 ZL-C0-CBL20-2
		Fuse	ZL-RFU20 [2]	
		Relay (sinking)	ZL-RRL16-24-1 ZL-RRL16W-24-1 ZL-RRL16F-24-1	
C0-16TD2		Feedthrough	ZL-RTB20 (-1)	
		Fuse	ZL-RFU20 [2]	
		Relay (sourcing)	ZL-RRL16-24-2 ZL-RRL16W-24-2 ZL-RRL16F-24-2	
C0-04TRS[1]		Feedthrough	ZL-RTB20 (-1)	

1 The C0-04TRS relay output is derated not to exceed 2A per point maximum when used with the ZIPLink wiring system.

2 Fuses (5 x 20 mm) are not included. See Edison Electronic Fuse section for (5 x 20 mm) fuse. S500 and GMA electronic circuit protection for fast-acting maximum protection. S506 and GMC electronic circuit protection for time-delay performance. Ideal for inductive circuits. To ensure proper operation, do not exceed the voltage and current rating of ZIPLink module. ZL-RFU20 = 2A per circuit.

Note: ***ZIP***Link Connector Module specifications follow the Compatibility Matrix tables. ***ZIP***Link Cable specifications are at the end of this ***ZIP***Link section.

PLC I/O Modules to *ZIP*Link Connector Modules – DL05/06

Note: In each table below select the length of cable as follows: (Blank) = 0.5 m, -1 = 1.0 m, -2 = 2.0 m.

DL05/06 PLC Input Module *ZIP*Link Selector

PLC	ZIPLink			
Input Module	# of Terms	Component	Module Part No.	Cable Part No.
D0-10ND3	13	Feedthrough	ZL-RTB20 (-1)	ZL-D0-CBL13
D0-10ND3F				
D0-16ND3 †	24	Feedthrough		ZL-D0-CBL24-L ZL-D0-CBL24-1L ZL-D0-CBL24-2L
		Sensor	ZL-LTB16-24-1	
F0-08NA-1	10	Not supported by the *ZIP*Link wiring system.		

† Select the cable length: L = 0.5m, 1L = 1.0m, or 2L = 2.0m.

DL05/06 PLC Combo In/Out Module *ZIP*Link Selector

PLC	ZIPLink			
Combo Module	# of Terms	Component	Module Part No.	Cable Part No.
D0-07CDR	10	Not supported by the *ZIP*Link wiring system.		
D0-08CDD1	13	Feedthrough	ZL-RTB20 (-1)	ZL-D0-CBL13

DL05/06 PLC Analog Module *ZIP*Link Selector

PLC	ZIPLink			
Analog Module	# of Terms	Component	Module	Cable
F0-04AD-1	8	These modules are not supported by the *ZIP*Link wiring system.		
F0-04AD-2				
F0-08ADH-1	13	Feedthrough	ZL-RTB20 (-1)	ZL-D0-CBL13
F0-08ADH-2				
F0-04DAH-1				
F0-08DAH-1				
F0-04DAH-2				
F0-08DAH-2				
F0-2AD2DA-2	8	These modules are not supported by the *ZIP*Link wiring system.		
F0-4AD2DA-1				
F0-4AD2DA-2				
F0-04RTD	Matched Only	These modules are not supported by the *ZIP*Link wiring system.		
F0-04THM				

Note: *ZIP*Link Connector Module specifications follow the Compatibility Matrix tables. *ZIP*Link Cables specifications are at the end of this *ZIP*Link section.

DL05/06 PLC Output Module *ZIP*Link Selector

PLC	ZIPLink			
Output Module	# of Terms	Component	Module Part No.	Cable Part No.
D0-10TD1	13	Feedthrough	ZL-RTB20 (-1)	ZL-D0-CBL13
D0-16TD1	24	Feedthrough	ZL-RTB20 (-1)	ZL-D0-CBL24 ZL-D0-CBL24-1 ZL-D0-CBL24-2
		Fuse	ZL-RFU20 2	
		Relay (sinking)	ZL-RRL16-24-1 ZL-RRL16W-24-1 ZL-RRL16F-24-1	
D0-10TD2	13	Feedthrough	ZL-RTB20 (-1)	ZL-D0-CBL13
D0-16TD2	24	Feedthrough		ZL-D0-CBL24 ZL-D0-CBL24-1 ZL-D0-CBL24-2
		Fuse	ZL-RFU20 2	
		Relay (sourcing)	ZL-RRL16-24-2 ZL-RRL16W-24-2 ZL-RRL16F-24-2	
D0-08TR	10	Not supported by the *ZIP*Link wiring system.		
F0-04TRS[1]	13	Feedthrough	ZL-RTB20 (-1)	ZL-D0-CBL13

DL05/06 PLC Fixed I/O *ZIP*Link Selector

PLC	ZIPLink			
	# of Terms	Component	Module Part No.	Cable Part No.
DL05	18	Not supported by the *ZIP*Link wiring system.		
DL06 **	20 (Input side only)	Feedthrough	ZL-RTB20 (-1)	ZL-D06X-CBL20
	20 (Output side only)			ZL-D06Y-CBL20

All Tables Notes:

** Select the cable length by replacing the * with: Blank = 0.5 m, -1 = 1.0 m, or -2 = 2.0 m.*

*** Input side only connects X0 through X17. X20 thru X23 will have to be hand wired if used. Output side the power and auxiliary power terminals will have to be hand wired.*

[1] Caution: The F0-04TRS relay outputs are derated not to exceed 2A per point when used with the ZIPLink wiring system.

[2] Note: Fuses (5 x 20 mm) are not included. See Edison Electronic Fuse section for (5 x 20 mm) fuse. S500 and GMA electronic circuit protection for fast-acting maximum protection. S506 and GMC electronic circuit protection for time-delay performance. Ideal for inductive circuits.

To ensure proper operation, do not exceed the voltage and current rating of ZIPLink module. ZL-RFU20 = 2A per circuit; ZL-RFU40 = 400mA per circuit.

PLC I/O Modules to *ZIP*Link Connector Modules – Do-more!/DL205

Do-more / DL205 PLC Input Module *ZIP*Link Selector

PLC	ZIPLink			
Input Module	# of Terms	Component	Module Part No.	Cable Part No. †
D2-08ND3	10	Feedthrough	ZL-RTB20 (-1)	ZL-D2-CBL10 *
D2-16ND3-2	19	Feedthrough		ZL-D2-CBL19 ZL-D2-CBL19-1 ZL-D2-CBL19-2
		Sensor	ZL-LTB16-24-1	
D2-32ND3 [1]	40	Feedthrough	ZL-RTB40 (-1)	180 deg conn: ZL-D24-CBL40 ZL-D24-CBL40-1 ZL-D24-CBL40-2 45 deg conn: ZL-D24-CBL40-X ZL-D24-CBL40-1X
		Sensor	ZL-LTB32-24-1	
D2-32ND3-2 [1]	40	Feedthrough	ZL-RTB40 (-1)	
		Sensor	ZL-LTB32-24-1	
D2-08NA-1	10	Feedthrough	ZL-RTB20 (-1)	ZL-D2-CBL10 ZL-D2-CBL10-1 ZL-D2-CBL10-2
D2-08NA-2	10			
D2-16NA	19	Feedthrough		ZL-D2-CBL19 *

† X in the part number represents a 45° angle.

Do-more/DL205 PLC Combo In/Out Module *ZIP*Link Selector

PLC	ZIPLink			
Combo Module	# of Terms	Component	Module Part No.	Cable Part No.
D2-08CDR	10	Feedthrough	ZL-RTB20 (-1)	ZL-D2-CBL10 *
H2-CTRIO2	19	Feedthrough	ZL-RTB20 (-1)	ZL-D2-CBL19 *

Do-more/DL205 PLC Analog Module *ZIP*Link Selector

PLC	ZIPLink			
Analog Module	# of Terms	Component	Module	Cable
F2-04AD-1	10	Feedthrough	ZL-RTB20 (-1)	ZL-D2-CBL10 ZL-D2-CBL10-1 ZL-D2-CBL10-2
F2-08AD-1				
F2-04AD-2				
F2-08AD-2				
F2-02DA-1				
F2-02DA-1L				
F2-02DAS-1				
F2-08DA-1				ZL-D2-CBL19 ZL-D2-CBL19-1 ZL-D2-CBL19-2
F2-02DA-2				
F2-02DA-2L				ZL-D2-CBL10 ZL-D2-CBL10-1 ZL-D2-CBL10-2
F2-02DAS-2				
F2-08DA-2				
F2-4AD2DA				
F2-8AD4DA-1	19			ZL-D2-CBL19 ZL-D2-CBL19-1 ZL-D2-CBL19-2
F2-8AD4DA-2				
F2-04RTD	Matched Only	These modules are not supported by the *ZIP*Link wiring system		
F2-04THM				

Do-more/ DL205 PLC Output Module *ZIP*Link Selector

PLC	ZIPLink			
Output Module	# of Terms	Component	Module Part No.	Cable Part No. †
D2-04TD1 [2]	10	Feedthrough	ZL-RTB20 (-1)	ZL-D2-CBL10 ZL-D2-CBL10-1 ZL-D2-CBL10-2
D2-08TD1				
D2-08TD2				
D2-16TD1-2	19	Feedthrough		ZL-D2-CBL19 ZL-D2-CBL19-1 ZL-D2-CBL19-2
		Fuse	ZL-RFU20 [4]	
D2-16TD2-2		Feedthrough	ZL-RTB20 (-1)	
		Fuse	ZL-RFU20 [4]	
		Relay	ZL-RRL16-24-2 ZL-RRL16W-24-2 ZL-RRL16F-24-2	
F2-16TD1P		Feedthrough	ZL-RTB20 (-1)	
F2-16TD2P				
D2-32TD1 [1]	40	Feedthrough	ZL-RFU40 (-1)	180 deg conn: ZL-D24-CBL40 ZL-D24-CBL40-1 ZL-D24-CBL40-2 45 deg conn: ZL-D24-CBL40-X ZL-D24-CBL40-1X
		Fuse	ZL-RFU40 [4]	
D2-32TD2 [1]		Feedthrough	ZL-RTB40 (-1)	
		Fuse	ZL-RFU40 [4]	
D2-08TA	10	Feedthrough	ZL-RTB20 (-1)	ZL-D2-CBL10 ZL-D2-CBL10-1 ZL-D2-CBL10-2
F2-08TA				
D2-12TA	19	Feedthrough		ZL-D2-CBL19 ZL-D2-CBL19-1 ZL-D2-CBL19-2
		Fuse	ZL-RFU20 [4]	
D2-04TRS [2]	10	Feedthrough	ZL-RTB20 (-1)	ZL-D2-CBL10 ZL-D2-CBL10-1 ZL-D2-CBL10-2
D2-08TR				
F2-08TRS [2]	19	Feedthrough		ZL-D2-CBL19 *
F2-08TR [3]	10			ZL-D2-CBL10 *
D2-12TR	19	Feedthrough		ZL-D2-CBL19 ZL-D2-CBL19-1 ZL-D2-CBL19-2
		Fuse	ZL-RFU20 [4]	

† X in the part number represents a 45° angle plug

** Select the cable length by replacing the * with: Blank = 0.5 m, -1 = 1.0 m, or -2 = 2.0 m.*

1 To make a custom cable for the 32-point modules, use: Solder-style 180° connector ZL-D24-CON or Solder-style 45° connector ZL-D24-CON-X

2 Caution: The D2-04TD1, D2-04TRS, and F2-08TRS outputs are derated not to exceed module specs 2A per point and 2A per common when used with the ZIPLink wiring system.

3 The F2-08TR outputs are derated not to exceed 2A per point and 4A per common when used with the ZIPLink wiring system.

4 Fuses (5 x 20 mm) are not included. See Edison Electronic Fuse section for (5 x 20 mm) fuse. S500 and GMA electronic circuit protection for fast-acting maximum protection. S506 and GMC electronic circuit protection for time-delay performance. Ideal for inductive circuits.

To ensure proper operation, do not exceed the voltage and current rating of ZIPLink module. ZL-RFU20= 2A per circuit; ZL-RFU40 = 400mA per circuit.

Note: ***ZIP***Link Connector Module specifications follow the Compatibility Matrix tables. ***ZIP***Link Cables specifications are at the end of this ***ZIP***Link section.

PLC I/O Modules to *ZIP*Link Connector Modules – DL305

DL305 PLC Input Module *ZIP*Link Selector				
PLC	***ZIPLink***			
Input Module	***# of Terms***	***Component***	***Module Part No.***	***Cable Part No.***
D3-08ND2 [1]	10	See Note 1		
D3-16ND2-1	18	These modules are not supported by the ***ZIP***Link wiring system		
F3-16ND3F				
D3-08NA-1 [1]	10	See Note 1		
D3-08NA-2 [1]				
D3-16NA	18	Not supported by the ***ZIP***Link wiring system		
D3-08NE3 [1]	10	See Note 1		
D3-16NE3	18	Not supported by the ***ZIP***Link wiring system		

DL305 PLC Output Module *ZIP*Link Selector				
PLC	***ZIPLink***			
Output Module	***# of Terms***	***Component***	***Module Part No.***	***Cable Part No.***
D3-04TD1 [1]	10	See Note 1		
D3-08TD1 [1]				
D3-08TD2 [1]				
D3-16TD1-1	18	These modules are not supported by the ***ZIP***Link wiring system		
D3-16TD2				
D3-04TAS [1]	10	See Note 1		
F3-08TAS-1	18	These modules are not supported by the ***ZIP***Link wiring system		
D3-08TA-2 [1]	10	See Note 1		
F3-16TA-2	18	These modules are not supported by the ***ZIP***Link wiring system		
D3-16TA-2				
D3-08TR [1]	10	See Note 1		
D3-16TR	18	These modules are not supported by the ***ZIP***Link wiring system		
F3-08TRS-1				
F3-08TRS-2				

All Tables Footnotes:
1 These I/O modules have non-removable terminal blocks which can be terminated using the ZL-CBL24-1P or 2P pigtail cable and the ZL-RTB20 module of the ZIPLink wiring system.

DL305 PLC Analog Module *ZIP*Link Selector				
PLC	***ZIPLink***			
Analog Module	***# of Terms***	***Component***	***Module***	***Cable***
F3-04ADS	18	These modules are not supported by the ***ZIP***Link wiring system		
F3-08AD-1				
F3-16AD				
F3-04DA-1				
F3-08THM-J	T/C Wire Only			
F3-08THM-K				

Note: ***ZIP***Link Connector Modules specifications follow the Compatibility Matrix tables. ***ZIP***Link Cables specifications are at the end of this ***ZIP***Link section.

PLC I/O Modules to *ZIP*Link Connector Modules - DL405

DL405 PLC Input Module *ZIP*Link Selector

PLC	ZIPLink			
Input Module	# of Terms	Component	Module Part No.	Cable Part No.
D4-08ND3S	20	See Note 3		
D4-16ND2				
D4-16ND2F				
D4-32ND3-1 [2]	40	Feedthrough	ZL-RTB40 (-1)	straight conn: ZL-D24-CBL40 ZL-D24-CBL40-1 ZL-D24-CBL40-2
		Sensor	ZL-LTB32-24-1	
D4-64ND2 [1,2]		Feedthrough	ZL-RTB40(-1)	
		Sensor	ZL-LTB32-24-1	45 deg conn: ZL-D24-CBL40-X ZL-D24-CBL40-1X
D4-08NA	11	See Note 3		
D4-16NA	20			
D4-16NA-1				
D4-16NE3				
F4-08NE3S				

DL405 PLC Output Module *ZIP*Link Selector

PLC	ZIPLink			
Output Module	# of Terms	Component	Module Part No.	Cable Part No.
F4-08TD1S	20	See Note 3		
D4-16TD1	20			
D4-16TD2				
D4-32TD1 [2]	40	Feedthrough	Feedthrough ZL-RTB40 (-1) Fused ZL-RFU40 [4]	straight conn: ZL-D24-CBL40 ZL-D24-CBL40-1 ZL-D24-CBL40-2 45 deg conn: ZL-D24-CBL40-X ZL-D24-CBL40-1X
		Fuse		
D4-32TD1-1 [2]		Feedthrough		
		Fuse		
D4-32TD2 [2]		Feedthrough		
		Fuse		
D4-64TD1 [1,2]		Feedthrough		
		Fuse		
D4-08TA	11	See Note 3		
D4-16TA	20			
D4-08TR	11			
F4-08TRS-1	20			
F4-08TRS-2				
D4-16TR				

Tables Footnotes:
1 The D4-64ND2 and D4-64TD1 modules have two 32-point connectors and require two ZIPLink cables and two ZIPLink connector modules.
2 To make a custom cable for the 32 or 64-point modules, use: Solder-style 180° connector ZL-D24-CON or Solder-style 45° connector ZL-D24-CON-X
3 These modules are not supported by the ZIPLink wiring system.
4 Note: Fuses (5 x 20 mm) are not included. See Edison Electronic Fuse section for (5 x 20 mm) fuse. S500 and GMA electronic circuit protection for fast-acting maximum protection. S506 and GMC electronic circuit protection for time-delay performance. Ideal for inductive circuits. To ensure proper operation, do not exceed the voltage and current rating of ZIPLink module. ZL-RFU20 = 2A per circuit; ZL-RFU40 = 400mA per circuit.

DL405 PLC Analog Module *ZIP*Link Selector

PLC	ZIPLink			
Analog Module	# of Terms	Component	Module	Cable
F4-04AD	20	See Note 3		
F4-04ADS				
F4-08AD				
F4-16AD-1				
F4-16AD-2				
F4-04DA-1				
F4-04DA-2				
F4-08DA-1				
F4-16DA-1				
F4-08DA-2				
F4-16DA-2				
F4-04DAS-1				
F4-04DAS-2				
F4-08THM[3]	T/C Wire Only			
F4-08THM-n[3]				
F4-08RTD[3]	Matched Only			

Note: ***ZIP***Link Connector Module specifications follow the Compatibility Matrix tables. ***ZIP***Link Cables specifications are at the end of this ***ZIP***Link section.

CPU I/O Modules to *ZIP*Link Connector Modules - Productivity®1000

Note: In each table below select the length of cable as follows: (Blank) = 0.5 m, -1 = 1.0 m, -2 = 2.0 m.

Productivity1000 Input Module *ZIP*Link Selector

Module	ZIPLink			
Input Module	# of Terms	Component	Part No.	Cable Part No.
P1-08ND3	10	Feedthrough	ZL-RTB20 (-1)	ZL-P1-CBL10 ZL-P1-CBL10-1 ZL-P1-CBL10-2
P1-08NE3				
P1-16ND3	18			ZL-P1-CBL18 ZL-P1-CBL18-1 ZL-P1-CBL18-2
P1-16NE3				
P1-08NA	10			ZL-P1-CBL10 ZL-P1-CBL10-1 ZL-P1-CBL10-2
P1-08SIM	See Note 1			

Productivity1000 Output Module *ZIP*Link Selector

Module	ZIPLink			
Output Module	# of Terms	Component	Part No.	Cable Part No.
P1-08TD1	10	Feedthrough	ZL-RTB20 (-1)	ZL-P1-CBL10 ZL-P1-CBL10-1 ZL-P1-CBL10-2
P1-08TD2				
P1-15TD1	18			ZL-P1-CBL18 ZL-P1-CBL18-1 ZL-P1-CBL18-2
P1-15TD2	18			
P1-08TA	10			ZL-P1-CBL10 ZL-P1-CBL10-1 ZL-P1-CBL10-2
P1-08TRS[2]	18			ZL-P1-CBL18 ZL-P1-CBL18-1 ZL-P1-CBL18-2
P1-16TR[3]				

Productivity1000 Combo Module *ZIP*Link Selector

I/O Module	ZIPLink			
Output Module	# of Terms	Component	Part No.	Cable Part No.
P1-15CDD1	18	Feedthrough	ZL-RTB20 (-1)	ZL-P1-CBL18 ZL-P1-CBL18-1 ZL-P1-CBL18-2
P1-15CDD2				
P1-16CDR				

Productivity1000 Analog Output Module *ZIP*Link Selector

Module	ZIPLink			
Analog Module	# of Terms	Component	Part No.	Cable Part No.
P1-04DAL-1	10	Feedthrough	ZL-RTB20 (-1)	ZL-P1-CBL10 ZL-P1-CBL10-1 ZL-P1-CBL10-2
P1-04DAL-2				
P1-08DAL-1				
P1-08DAL-2				

Productivity1000 Analog Input Module *ZIP*Link Selector

I/O Module	ZIPLink			
Analog Module	# of Terms	Component	Part No.	Cable Part No.
P1-04AD	18	Feedthrough	ZL-RTB20 (-1)	ZL-P1-CBL18 ZL-P1-CBL18-1 ZL-P1-CBL18-2
P1-04ADL-1	10			ZL-P1-CBL10 ZL-P1-CBL10-1 ZL-P1-CBL10-2
P1-04ADL-2				
P1-08ADL-1				
P1-08ADL-2				
P1-04THM	T/C Wire Only	See Note 1		
P1-04RTD	Matched Only	See Note 1		
P1-04NTC	Copper Conductors	See Note 1		

Productivity1000 Analog Input/Output Module *ZIP*Link Selector

I/O Module	ZIPLink			
Analog Module	# of Terms	Component	Part No.	Cable Part No.
P1-4ADL2DAL-1	10	Feedthrough	ZL-RTB20 (-1)	ZL-P1-CBL10 ZL-P1-CBL10-1 ZL-P1-CBL10-2
P1-4ADL2DAL-2				

Table Footnotes:
1. These modules are not supported by the ZIPLink wiring system.
2. The P1-08TRS output module is derated not to exceed 2A per point maximum when used with the ZIPLink wiring system.
3. The P1-16TR output module is derated not to exceed 2A per point and 4 amps per common maximum when used with the ZIPLink wiring system.

Note: ***ZIP***Link Connector Modules specifications follow the Compatibility Matrix tables. ***ZIP***Link Cables specifications are at the end of this ***ZIP***Link section.

CPU I/O Modules to *ZIP*Link Connector Modules - Productivity®2000

Note: In each table below select the length of cable as follows: (Blank) = 0.5 m, -1 = 1.0 m, -2 = 2.0 m.

Productivity2000 Input Module *ZIP*Link Selector				
I/O Module	*ZIPLink*			
Input Module	*# of Terms*	*Component*	*Part No.*	*Cable Part No.*
P2-08ND3-1	18	Feedthrough	ZL-RTB20 (-1)	ZL-P2-CBL18 ZL-P2-CBL18-1 ZL-P2-CBL18-2
P2-16ND3-1		Sensor/LED	ZL-LTB16-24-1	
P2-08NE3		Feedthrough	ZL-RTB20 (-1)	
P2-16NE3		Sensor/LED	ZL-LTB16-24-1	
P2-32ND3-1	40	Feedthrough	ZL-RTB40 (-1)	ZL-CBL40 ZL-CBL40-1 ZL-CBL40-2
		Sensor/LED	ZL-LTB32-24-1	
P2-32NE3		Feedthrough	ZL-RTB40 (-1)	
		Sensor/LED	ZL-LTB32-24-1	
P2-08NAS	18	Feedthrough	ZL-RTB20 (-1)	ZL-P2-CBL18 ZL-P2-CBL18-1 ZL-P2-CBL18-2
P2-16NA				

Productivity2000 Output Module *ZIP*Link Selector				
I/O Module	*ZIPLink*			
Output Module	*# of Terms*	*Component*	*Part No.*	*Cable Part No.*
P2-08TD1S	18	Feedthrough	ZL-RTB20 (-1)	ZL-P2-CBL18 ZL-P2-CBL18-1 ZL-P2-CBL18-2
P2-08TD2S				
P2-15TD1				
P2-15TD2				
P2-08TD1P				
P2-08TD2P				
P2-08TRS				
P2-08TAS				
P2-16TA				
		Fuse	ZL-RFU20 [2]	
P2-16TD1P		Feedthrough	ZL-RTB20 (-1)	
		Relay (Sinking)	ZL-RRL16-24-1 ZL-RRL16W-24-1 ZL-RRL16F-24-1	
P2-16TD2P		Feedthrough	ZL-RTB20 (-1)	
		Relay (Sourcing)	ZL-RRL16-24-2 ZL-RRL16W-24-2 ZL-RRL16F-24-2	
P2-32TD1P	40	Feedthrough	ZL-RTB40 (-1)	ZL-CBL40 ZL-CBL40-1 ZL-CBL40-2
P2-32TD2P		Feedthrough	ZL-RTB40 (-1)	
P2-16TR	18	Feedthrough	ZL-RTB20 (-1)	ZL-P2-CBL18 ZL-P2-CBL18-1 ZL-P2-CBL18-2
		Fuse	ZL-RTB20 [2]	

Productivity2000 Specialty & Motion Modules *ZIP*Link Selector				
I/O Module	*ZIPLink*			
Input Module	*# of Terms*	*Component*	*Module Part No.*	*Cable Part No.*
P2-HSI	40	Feedthrough	ZL-RTB40 (-1)	ZL-CBL40-S ZL-CBL40-1S ZL-CBL40-2S
P2-HSO				
P2-08SIM	See Note 1			
P2-SCM				

Tables Footnotes:
1 These modules are not supported by the ZIPLink wiring system
2 Fuses (5 x 20 mm) are not included. See Edison Electronic Fuse section for (5 x 20 mm) fuse. S500 and GMA electronic circuit protection for fast-acting maximum protection. S506 and GMC electronic circuit protection for time-delay performance. Ideal for inductive circuits.
To ensure proper operation, do not exceed the voltage and current rating of ZIPLink module. ZL-RFU20 = 2A per circuit; ZL-RFU40 = 400mA per circuit.

Note: ***ZIP***Link Connector Modules specifications follow the Compatibility Matrix tables. ***ZIP***Link Cables specifications are at the end of this ***ZIP***Link section.

CPU I/O Modules to *ZIP*Link Connector Modules - Productivity®2000

Note: In each table below select the length of cable as follows: (Blank) = 0.5 m, -1 = 1.0 m, -2 = 2.0 m.

Productivity2000 Analog Input Module *ZIP*Link Selector				
I/O Module	***ZIPLink***			
Analog Module	***# of Terms***	***Component***	***Part No.***	***Cable Part No.***
P2-04AD	18	Feedthrough	ZL-RTB20 (-1)	ZL-P2-CBL18 ZL-P2-CBL18-1 ZL-P2-CBL18-2
P2-08AD-1				
P2-08AD-2				
P2-08ADL-1				
P2-08ADL-2				
P2-16AD-1	24			ZL-P2-CBL24 ZL-P2-CBL24-1 ZL-P2-CBL24-2
P2-16AD-2				
P2-16ADL-1				
P2-16ADL-2				
P2-06RTD	Matched Only	See Note 1		
P2-08THM	T/C Wire Only	See Note 1		
P2-08NTC	Copper Conductors	See Note 1		

1 These modules are not supported by the *ZIP*Link wiring system

Productivity2000 Analog Output Module *ZIP*Link Selector				
I/O Module	***ZIPLink***			
Analog Module	***# of Terms***	***Component***	***Part No.***	***Cable Part No.***
P2-04DA	18	Feedthrough	ZL-RTB20 (-1)	ZL-P2-CBL18 ZL-P2-CBL18-1 ZL-P2-CBL18-2
P2-04DAL-1				
P2-04DAL-2				
P2-08DA-1				
P2-08DA-2				
P2-08DAL-1				
P2-08DAL-2				
P2-16DA-1	24			ZL-P2-CBL24 ZL-P2-CBL24-1 ZL-P2-CBL24-2
P2-16DA-2				
P2-16DAL-1				
P2-16DAL-2				
P2-8AD4DA-1	18			ZL-P2-CBL18 ZL-P2-CBL18-1 ZL-P2-CBL18-2
P2-8AD4DA-2				

Note: ***ZIP***Link Connector Modules specifications follow the Compatibility Matrix tables. ***ZIP***Link Cables specifications are at the end of this ***ZIP***Link section.

CPU I/O Modules to *ZIP*Link Connector Modules - Productivity3000®

Note: In each table below select the length of cable as follows: (Blank) = 0.5 m, -1 = 1.0 m, -2 = 2.0 m.

Productivity3000 CPU Input Module *ZIP*Link Selector

I/O Module		ZIPLink		
Input Module	# of Terms	Component	Module Part No.	Cable Part No.
P3-08NAS	20	Feedthrough	ZL-RTB20 (-1)	ZL-P3-CBL20 ZL-P3-CBL20-1 ZL-P3-CBL20-2
P3-08ND3S				
P3-16NA		Feedthrough		ZL-P3-CBL20-L ZL-P3-CBL20-1L ZL-P3-CBL20-2L
P3-16ND3		Feedthrough		
		Sensor	ZL-LTB16-24-1	
P3-32ND3	40	Feedthrough	ZL-RTB40 (-1)	ZL-CBL40 ZL-CBL40-1 ZL-CBL40-2
		Sensor	ZL-LTB32-24-1	
P3-64ND3 [1]		Feedthrough	ZL-RTB40 (-1)	
		Sensor	ZL-LTB32-24-1	

Productivity3000 CPU Analog In Module *ZIP*Link Selector

I/O Module		ZIPLink		
Analog Module	# of Terms	Component	Module	Cable*
P3-04ADS	20	Feedthrough	ZL-RTB20 (-1)	ZL-P3-CBL20-L ZL-P3-CBL20-1L ZL-P3-CBL20-2L
P3-08AD				
P3-16AD-1				
P3-16AD-2				
P3-08RTD	Matched Only	See Note 2		
P3-08THM	T/C Wire Only			
P3-04DA	20	Feedthrough	ZL-RTB20 (-1)	ZL-P3-CBL20-L ZL-P3-CBL20-1L ZL-P3-CBL20-2L
P3-08DA-1				
P3-08DA-2				
P3-06DAS-1				
P3-06DAS-2				
P3-16DA-1				
P3-16DA-2				
P3-8AD4DA-1				
P3-8AD4DA-2				

Productivity3000 CPU Specialty Module *ZIP*Link Selector

I/O Module		ZIPLink		
Input Module	# of Terms	Component	Module Part No.	Cable Part No.
P3-HSI	40	Feedthrough	ZL-RTB40 (-1)	ZL-CBL40-S ZL-CBL40-1S ZL-CBL40-2S
P3-HSO				

Productivity3000 CPU Output Module *ZIP*Link Selector

I/O Module		ZIPLink		
Output Module	# of Terms	Component	Module Part No.	Cable Part No.
P3-08TAS	20	Feedthrough	ZL-RTB20 (-1)	ZL-P3-CBL20 *
P3-08TD1S				ZL-P3-CBL20-L ZL-P3-CBL20-1L ZL-P3-CBL20-2L
P3-08TD2S				
P3-08TRS		Feedthrough		ZL-P3-CBL20 ZL-P3-CBL20-1 ZL-P3-CBL20-2
P3-16TA		Feedthrough		
		Fuse	ZL-RFU20 [4]	
P3-16TD1		Feedthrough	ZL-RTB20 (-1)	
		Fuse	ZL-RFU20 [4]	
		Relay (sinking)	ZL-RRL16-24-1 ZL-RRL16W-24-1 ZL-RRL16F-24-1	
P3-16TD2		Feedthrough	ZL-RTB20 (-1)	
		Fuse	ZL-RFU20 [4]	
		Relay (sourcing)	ZL-RRL16-24-2 ZL-RRL16W-24-2 ZL-RRL16F-24-2	
P3-16TR		Feedthrough	ZL-RTB20 (-1)	
		Fuse	ZL-RFU20 [4]	
P3-08TRS-1 [3]		Feedthrough	ZL-RTB20 (-1)	
		Fuse	ZL-RFU20 [4]	
P3-32TD1	40	Feedthrough	ZL-RTB40 (-1)	ZL-CBL40 ZL-CBL40-1 ZL-CBL40-2
		Fuse	ZL-RFU40 [4]	
P3-32TD2		Feedthrough	ZL-RTB40 (-1)	
		Fuse	ZL-RFU40 [4]	
P3-64TD1 [1]		Feedthrough	ZL-RTB40 (-1)	
		Fuse	ZL-RFU40 [4]	
P3-64TD2 [1]		Feedthrough	ZL-RTB40 (-1)	
		Fuse	ZL-RFU40 [4]	
P3-16TD3P		Feedthrough	ZL-RTB40(-1)	

Table Footnotes:

* Select the cable length: L = 0.5 m, 1L = 1.0 m, or 2L = 2.0 m.

[1] The P3-64ND3, P3-64TD1 and P3-64TD2 modules have two 32-point connectors and require two *ZIP*Link cables and two *ZIP*Link connector modules.

[2] These modules are not supported by the *ZIP*Link wiring system.

[3] The P3-08TRS-1 output module is derated not to exceed 2A per point maximum when used with the *ZIP*Link wiring system.

[4] Fuses (5 x 20 mm) are not included. See Edison Electronic Fuse section for (5 x 20 mm) fuse. S500 and GMA electronic circuit protection for fast-acting maximum protection. S506 and GMC electronic circuit protection for time-delay performance. Ideal for inductive circuits.

To ensure proper operation, do not exceed the voltage and current rating of *ZIP*Link module. ZL-RFU20 = 2A per circuit; ZL-RFU40 = 400mA per circuit.

Note: ***ZIP***Link Connector Modules specifications follow the Compatibility Matrix tables. ***ZIP***Link Cables specifications are at the end of this ***ZIP***Link section.

PLC I/O to 3rd Party Devices

PLC I/O to 3rd Party Devices *ZIP*Link Cable Selector				
PLC		***ZIPLink***		
PLC Family	***# of Terms***	***Number of Wires***	***Pigtail Cable Part No. †***	***Length***
BRX MPUs	15	18	ZL-BX-CBL15-1P or -2P	"-1P" = 1 meter, "-2P" = 2 meters
	20	24	ZL-BX-CBL20-1P or -2P	
BRX Expansion Modules	10	24	ZL-BXEM-CBL10-1P or -2P	
	15	18	ZL-BXEM-CBL15-1P or -2P	
	20	24	ZL-BXEM-CBL20-1P or -2P	
CLICK I/O Modules	11	11	ZL-C0-CBL11-1P	
	20	20	ZL-C0-CBL20-1P	
DL05 PLC Fixed I/O	22	22	ZL-D05-CBL22-1P	
DL06 PLC Fixed I/O	24	24	ZL-D06-CBL24-1P	
DL05 & DL06 I/O Modules	8	8	ZL-D0-CBL8-1P	
	10	10	ZL-D0-CBL10-1P	
	13	13	ZL-D0-CBL13-1P	
	24	24	ZL-D0-CBL24-1P or -2P	
DL205 I/O Modules †	10	10	ZL-D0-CBL10-1P or -2P	
	19	19	ZL-D2-CBL19-1P or -2P	
	40	40	ZL-D24-CBL40-1P or -2P	
			ZL-D24-CBL40-1XP or -2XP	
DL405 I/O Modules †	40	40	ZL-D24-CBL40-1XP or -2XP	
			ZL-D24-CBL40-1P or -2P	
Productivity®1000 I/O Modules	10	20	ZL-P1-CBL10-1P or -2P	
	18	20	ZL-P1-CBL18-1P or -2P	
Productivity®2000 I/O Modules	20	20	ZL-P2-CBL18-1P or -2P	
	24	24	ZL-P2-CBL24-1P or -2P	
	40	40	ZL-P3-CBL40-1P or -2P	
Productivity3000® I/O Modules	20	20	ZL-P3-CBL20-1P or -2P	
	40	40	ZL-P3-CBL40-1P or -2P	

† X = 45° cable connector, all other cables have 180° cable connector

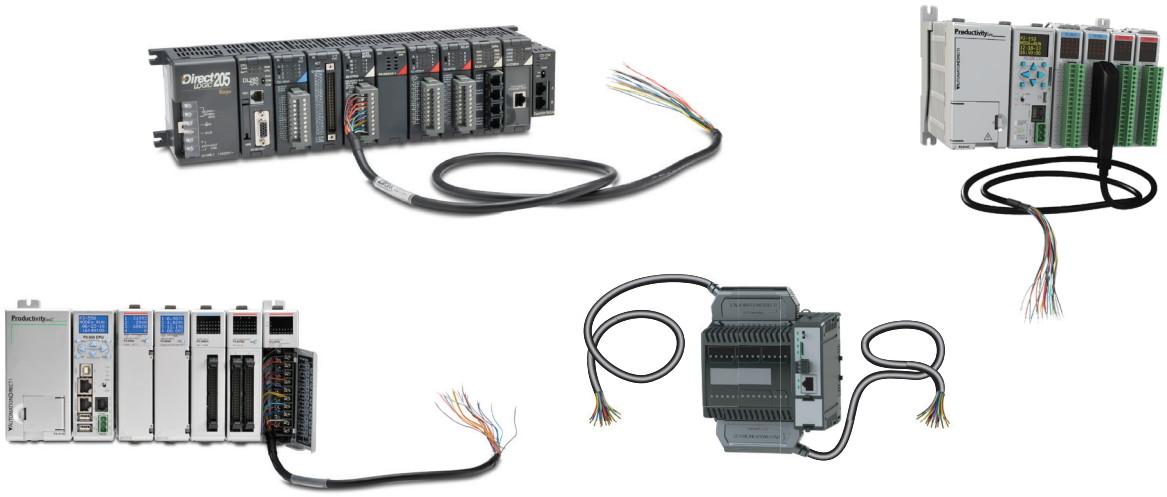

Motor Controller Communication

Drive / Motor Controller (GS/DuraPulse/SureServo/SureStep/Stellar) *ZIP*Link Selector							
Drive / Motor Controller		***Communications***			***ZIPLink Cable***		
Controller	***Comm Port Type***	***Network/Protocol***	***Connects to***	***Comm Port Type***	***Cable (2 meter length)***	***Cable Connectors***	***Other Hardware Required***
GS1	RJ12	RS-485 Modbus RTU	BRX MPUs	RS-485, 3-Pin	ZL-RJ12-CBL-2P	RJ12 to pigtail	N/A
			P2-550				
			P3-530				
			P3-550				
			P3-550E				
			P2-SCM	RS-485, 4-Pin			
			P3-SCM				
			DL06 PLCs	Port 2 (HD15)	GS-485HD15-CBL-2	RJ12 to HD15	
			D2-262 CPU				
			GS-EDRV100	RJ12	GS-EDRV-CBL-2	RJ12 to RJ12	
			ZL-CDM-RJ12Xxx *	RJ12	GS-485RJ12-CBL-2		
			FA-ISOCON	5-pin Connector	GS-ISOCON-CBL-2	RJ12 to 5-pin plug	
GS2	RJ12	RS-232 Modbus RTU	BRX MPUs	RS-232/485, 3-Pin	ZL-RJ12-CBL-2P	RJ12 to pigtail	N/A
			P2-550	RS-485, 4-Pin			
			P3-530				
			P3-550				
			P3-550E				
			P2-SCM	Ports 1, 2 & 3			
			P3-SCM	Ports 1 to 4			
			CLICK PLCs	Port 2 (RJ12)	GS-RJ12-CBL-2	RJ12 to RJ12	
			DL05 PLCs				
			DL06 PLCs	Port 2 (HD15)			FA-15HD
			D2-262 CPU				
			D4-454 CPU	Port 3 (25-pin)			FA-CABKIT
		RS-485 Modbus RTU	BRX MPUs	RS-232/485, 3-Pin	ZL-RJ12-CBL-2P	RJ12 to pigtail	N/A
			P2-550	RS-485, 3-Pin			
			P3-530				
			P3-550				
			P3-550E				
			P2-SCM	RS-485, 4-Pin			
			P3-SCM				
			DL06 PLCs	Port 2 (HD15)	GS-485HD15-CBL-2	RJ12 to HD15	
			D2-262 CPU				
			GS-EDRV100	RJ12	GS-EDRV-CBL-2	RJ12 to RJ12	
			ZL-CDM-RJ12Xxx *	RJ12	GS-485RJ12-CBL-2		
			FA-ISOCON	5-pin Connector	GS-ISOCON-CBL-2	RJ12 to 5-pin plug	
Stellar (Soft Starter) SR44 Series	RJ45 * *	RS-485 Modbus RTU	DL06 PLCs	Port 2 (HD15)	SR44-485HD15-CBL-2	RJ45 to HD15	SR44-RS485
			D2-262 CPU				
			ZL-CDM-RJ12Xxx *	RJ12	SR44-485RJ45-CBL-2	RJ45 to RJ12	

**** When using the ZL-CDM-RJ12Xxx ZIPLink Communication Distribution Module, replace the lowercase xx with the number of RJ12 ports, i.e. 4 for four ports or 10 for ten ports. (ex: ZL-CDM-RJ12X4 or ZL-CDM-RJ12X10)***

**** * The SR44-RS485 Communications Adapter must be installed for RS-485 communications with the Stellar soft starters.***

ZIPLINK AUTOMATIONDIRECT Motor Controller Communication

Drive / Motor Controller (GS/DuraPulse/SureServo/SureStep/Stellar) *ZIP*Link Selector							
Drive / Motor Controller		***Communications***			***ZIPLink Cable***		
Controller	***Comm Port Type***	***Network/Protocol***	***Connects to***	***Comm Port Type***	***Cable (2 meter length)***	***Cable Connectors***	***Other Hardware Required***
DuraPulse (GS3)	RJ12	RS-485 Modbus RTU	BRX MPUs	RS-485, 3-Pin	ZL-RJ12-CBL-2P	RJ12 to pigtail	N/A
			P2-550	RS-485, 3-Pin			
			P3-530				
			P3-550				
			P3-550E				
			P2-SCM	RS-485, 4-Pin			
			P3-SCM				
			DL06 PLCs	Port 2 (HD15)	GS-485HD15-CBL-2	RJ12 to HD15	
			D2-262 CPU				
			GS-EDRV100	RJ12	GS-EDRV-CBL-2	RJ12 to RJ12	
			ZL-CDM-RJ12Xxx *	RJ12	GS-485RJ12-CBL-2		
			FA-ISOCON	5-pin Connector	GS-ISOCON-CBL-2	RJ12 to 5-pin plug	
SureServo	IEEE1394 (CN3)	RS-232 Modbus RTU	CLICK PLCs	Port 2 (RJ12)	SVC-232RJ12-CBL-2	6-pin IEEE to RJ12	N/A
			DL05 PLCs				
			DL06 PLCs	Port 2 (HD15)			FA-15HD
			D2-262 CPU				
			P2-550	RS232	SVC-232RJ12-CBL-2	6-pin IEEE to RJ12	N/A
			P3-530				
			P3-550				
			P3-550E				
			P2-SCM	Ports 1, 2 & 3			
			P3-SCM				
		RS-485 Modbus RTU	DL06 PLCs	Port 2 (HD15)	SVC-485HD15-CBL-2	6-pin IEEE to HD15	
			D2-262 CPU				
			ZL-CDM-RJ12Xxx *	RJ12	SVC-485RJ12-CBL-2	6-pin IEEE to RJ12	
			USB-485M	RJ45	SVC-485CFG-CBL-2	6-pin IEEE to RJ45	
SureStep	RJ12	RS-232 ASCII	BRX MPUs	3-Pin	ZL-RJ12-CBL-2P	RJ12 to pigtail	
			P2-550	RS-485, 3-Pin			
			P3-530				
			P3-550				
			P3-550E				
			P2-SCM	RS-485, 4-Pin			
			P3-SCM				
			DL06 PLCs	Port 2 (HD15)	STP-232HD15-CBL-2	HD15-pin to RJ12	
			D2-262 CPU (Port2)				
			DL05 PLCs	RJ12	STP-232RJ12-CBL-2	RJ12 to RJ12	
			CLICK PLCs				

**** When using the ZL-CDM-RJ12Xxx ZIPLink Communication Distribution Module, replace the lowercase xx with the number of RJ12 ports, i.e. 4 for four ports or 10 for ten ports. (ex: ZL-CDM-RJ12X4or ZL-CDM-RJ12X10)***

**** * The SR44-RS485 Communications Adapter must be installed for RS-485 communications with the Stellar soft starters.***

ZIPLink Serial Communication

ZIPLink Serial Communication Cable Selector					
PLC			ZIPLink		
PLCs and Comm Modules	Port No.	Comm Port Type	Cable Connector Type	Cable Part No. (2 meter length)	D-Sub and RJ12 Feedthrough Module Part No. (optional)
BRX MPUs	RS232	POM (RJ12)	6-pin RJ12 to RJ12 Crossover	ZL-RJ12-CBL-2	ZL-RTB-RJ12
CLICK (Basic, Standard and Analog)	1	RJ12			
	2				
CLICK Ethernet (Basic, Standard)	2				
DL05	1				
	2				
DL06	1				
D0-DCM	1				
D2-262	1				
D2-DCM	1	25-pin D-sub, Female	25-pin Male D-sub to Female D-sub	ZL-DB25-CBL-2	ZL-RTB-DB25
D3-DCM	1	25-pin D-sub, Female	25-pin Male D-sub to Female D-sub	ZL-DB25-CBL-2	ZL-RTB-DB25
D4-454	0	15-pin D-sub, Female	15-pin Male D-sub to Female D-sub	ZL-DB15-CBL-2	ZL-RTB-DB15
	1 & 3	25-pin D-sub, Female	25-pin Male D-sub to Female D-sub	ZL-DB25-CBL-2	ZL-RTB-DB25
	2	RJ12	6-pin RJ12 to RJ12 Crossover	ZL-RJ12-CBL-2	ZL-RTB-RJ12
D4-DCM	1	25-pin D-sub, Female	25-pin Male D-sub to Female D-sub	ZL-DB25-CBL-2	ZL-RTB-DB25
P1-540	RS232	RJ12	6-pin RJ12 to RJ12 Crossover	ZL-RJ12-CBL-2	ZL-RTB-RJ12
P2-550					
P3-530					
P3-550					

Specialty Modules

*ZIP*Link Specialty Modules Selector			
ZIPLink			
Module	***Type***	***Module Part No.***	***Cable Part No. (optional)***
24VDC Stand-Alone Relay	Single-Socket Relay	ZL-RLS1-24	N/A
	Four Socket-Relay	ZL-RLS4-24	
120VAC Stand-Alone Relay	Single-Socket Relay	ZL-RLS1-120	
	Four-Socket Relay	ZL-RLS4-120	
250V AC/DC Max.	16-point, Fused Block	ZL-FUSE-16	
24VDC Transorb	8-Channel	ZL-TSD8-24	
120VAC Transorb	8-Channel	ZL-TSD8-120	
240V AC/DC Max.	40-Point Power/Common	ZL-RTB-COM	
D-Sub Feedthrough	9-pin Male & Female D-Subs to Terminal Blocks	ZL-RTB-DB09	ZL-DB9-CBL-2
	15-pin Male & Female D-Subs to Terminal Blocks	ZL-RTB-DB15	ZL-DB15-CBL-2
	25-pin Male & Female D-Subs to Terminal Blocks	ZL-RTB-DB25	ZL-DB25-CBL-2
RJ12 Feedthrough	6-pin RJ12 to Terminal Block	ZL-RTB-RJ12	ZL-RJ12-CBL-2
RJ45 Feedthrough	8-pin RJ45 to Terminal Block	ZL-RTB-RJ45	N/A
Comm Port Adapters	15-pin HD D-Sub to Terminal Block	ZL-CMA15	
	15-pin HD D-Sub to Terminal Block with LED Indicators	ZL-CMA15L	
Comm Distribution	4-Port RJ12 to Terminal Block	ZL-CDM-RJ12X4	
	10-Port RJ12 to Terminal Block	ZL-CDM-RJ12X10	
Feedthrough Module (SureServo I/O)	50-pin to Terminal Blocks	ZL-RTB50	ZL-SVC-50CBL *

*** Select the cable length by replacing the * with: Blank = 0.5m, -1 = 1.0m, or -2 = 2.0m**

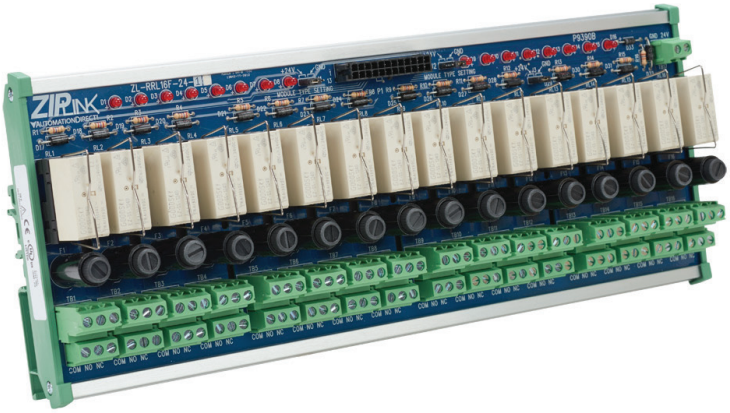

Connector Modules to 3rd Party Devices

*ZIP*Link Connector Modules to 3rd Party Devices Selector			
ZIPLink			
Module	***Type***	***Module Part No.***	***Pigtail Cable Part No. (optional)***
Feedthrough Connector	24-pin to Terminal Blocks	ZL-RTB20 ZL-RTB20-1	ZL-CBL24-1P ZL-CBL24-2P
	40-pin to Terminal Blocks	ZL-RTB40 ZL-RTB40-1	ZL-CBL40-1P ZL-CBL40-2P
	50-pin to Terminal Blocks	ZL-RTB50	ZL-CBL50-1P ZL-CBL50-2P
Fuse	16-Fuse, 24-pin	ZL-RFU20	ZL-CBL24-1P ZL-CBL24-2P
	32-Fuse, 40-pin	ZL-RFU40	ZL-CBL40-1P ZL-CBL40-2P
24VDC Powered Relay	16-Relay, Sinking, 24-pin	ZL-RRL16-24-1 ZL-RRL16F-24-1 ZL-RRL16W-24-1	ZL-CBL24-1P ZL-CBL24-2P
	16-Relay, Sourcing, 24-pin	ZL-RRL16-24-2 ZL-RRL16F-24-2 ZL-RRL16W-24-2	ZL-CBL24-1P ZL-CBL24-2P
Sensor Input	16-Point with LEDs	ZL-LTB16-24-1	ZL-CBL24-1P ZL-CBL24-2P
	32-Point with LEDs	ZL-LTB32-24-1	ZL-CBL40-1P ZL-CBL40-2P
D-Sub Feedhrough	9-pin D-Sub to Terminal Block	ZL-RTB-DB09	ZL-DB9F-CBL-2P
			ZL-DB9F-CBL-5P

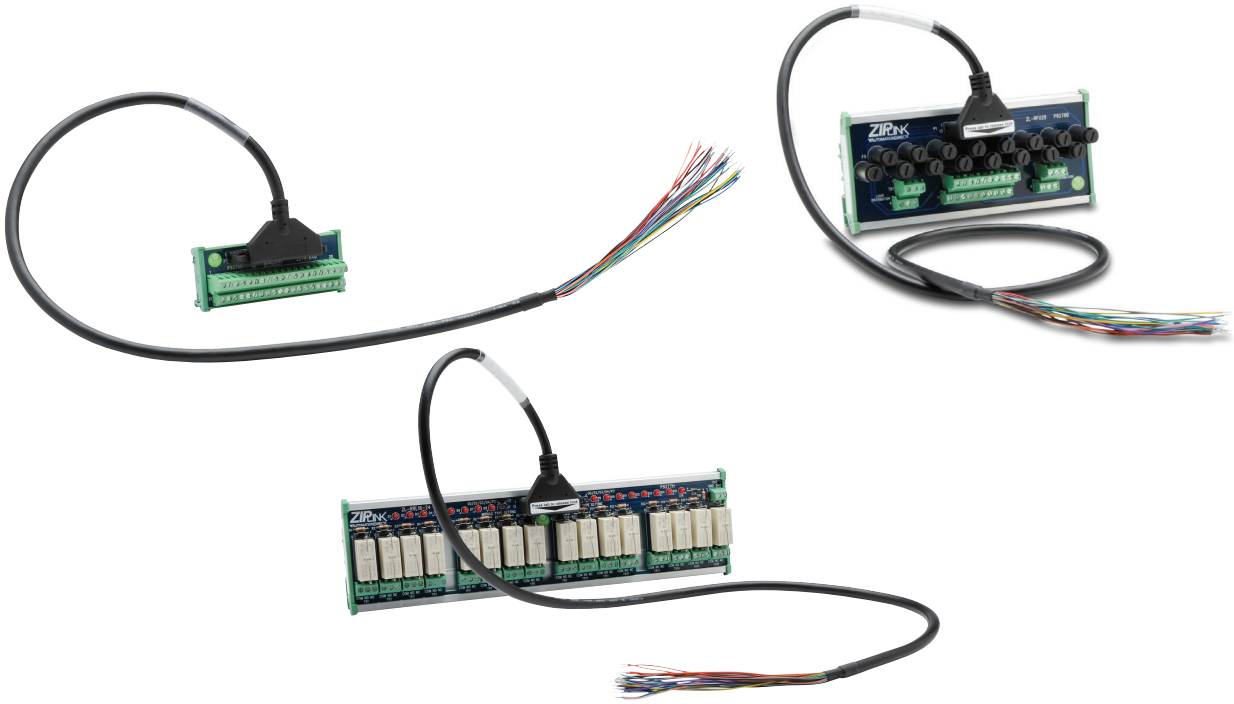

Feedthrough Connector Modules

Feedthrough modules provide low-cost and compact field wiring screw termination solutions allowing quick connection with ***ZIP***Link cables to PLC I/O modules. ***ZIP***Link modules mount on 35mm DIN rail (part #DN-R35S1). Module ZL-RTB20 will mount on 15mm DIN rail (part #DN-R15S1).

ZL-RTB20

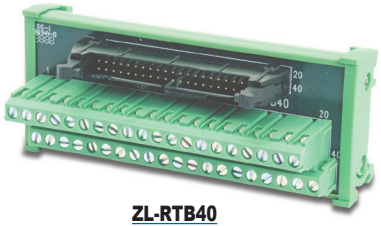

ZL-RTB40

ZL-RTB50

Specifications												
Feedthrough Modules	***Part #***	***Pcs/ Pkg***	***Price/ Pkg***	***Weight (lbs)***	***Part #***	***Pcs/ Pkg***	***Price/Pkg***	***Weight (lbs)***	***Part #***	***Pcs/ Pkg***	***Price/ Pkg***	***Weight (lbs)***
	ZL-RTB20	***1***	***$34.00***	***0.26***	***ZL-RTB40***	***1***	***$57.00***	***0.22***	***ZL-RTB50***	***1***	***$80.00***	***0.33***
Description 4	20-Pole Feedthrough Connector Module				40-Pole Feedthrough Connector Module				50-Pole Connector Module for interfacing SureServo I/O to a controller			
Maximum Voltage	300 VAC/VDC				36 VAC/VDC				0–30 VDC 2			
UL Voltage Rating	0–250 VAC/VDC				0–30 VAC/VDC 2				24VDC			
Maximum Current per Circuit	2A				500mA				0.2 A			
Maximum Current per Common Circuit	4A 1				N/A				N/A			
Maximum Current per Module	40A (all conductors combined including commons)				32A (all conductors combined including commons)				10A			
Number of Terminal Block Positions	20				40				50			
Surrounding Temperature Range	32 to 140°F (0 to 60°C)											
Terminal Block Contacts	Copper alloy, tin-lead plated											
Wire Range (Rated Cross Section) 3	12–24 AWG Solid or Stranded Copper Conductor (2.5 mm²)											
Wire Strip Length	0.24–0.27 in (6–7 mm)											
Screw Torque	4.4 in·lbs (0.5 N·m)											
Connector Type	Molex Micro-Fit 3.0, 24 pin connector Example: Receptacle 43020-2400 Pins 43031 Series, Male				3M 34000 Series IDC Connector, strain relief is required to latch to header. Example: Socket 3417-7640, Strain relief 3448-3040				3M mini DELTA Ribbon (MDR), 101 Series, 50 pin Example: Plug 10150 - 3000VE, Shell 10350 - 52A0 - 008			
Connecting Cables (Sold Separately)	Click on link: Wiring Selection Guides. Click on link: Connection Cable Specifications Tables.								ZL-SVC-CBL50 (0.5 m/1.6 ft) ZL-SVC-CBL50-1 (1m/3.3 ft) ZL-SVC-CBL50-2 (2m/6.6 ft) Click on link: Connection Cable Specifications Tables.			
Cable/Wire Clearance	0.5 in (12.7 mm) Required											
Mounting Restrictions	None											
Approvals	File # E200031 UL, cUL, Class 1, Division 2, Groups A,B,C,D Hazardous Locations, CE, EN 61131-2:2007											

1 The 4 common circuits are at terminal block positions 1, 6, 11, and 16. Each common circuit has 2 cable wires per terminal.
2 Use Class 2 power supply
3 Use conductors rated 60°/75°C
4 Connecting cables are for internal wiring only.

Note: See wiring details and dimensional drawings on our Web site at : http://www.automationdirect.com/static/manuals/ziplinks/ziplinks.html.

Feedthrough Connector Modules

Feedthrough modules provide low-cost and compact field wiring screw termination solutions for quickly connecting ***ZIP***Link cables with PLCs. Modules mount on 35mm DIN rail (part #DN-R35S1) or 15mm DIN rail (part #DN-R15S1).

ZL-RTB20-1

ZL-RTB40-1

Specifications								
Feedthrough Modules	***Part #***	***Pcs/Pkg***	***Price/Pkg***	***Weight (lbs)***	***Part #***	***Pcs/Pkg***	***Price/Pkg#***	***Weight (lbs)***
	ZL-RTB20-1	***1***	***$46.00***	***0.25***	***ZL-RTB40-1***	***1***	***$79.00***	***0.46***
Description 1	20-Pole Feedthrough Connector Module				40-Pole Feedthrough Connector Module			
Maximum Voltage	300 VAC/VDC				36 VAC/VDC			
UL Voltage Rating 2	0–250 VAC/VDC				0–30 VAC/VDC			
Maximum Current per Circuit	2A				500mA			
Maximum Current per Common Circuit	4A				N/A			
Maximum Current per Module	40A (All conductors combined including commons)				32A (All conductors combined including commons)			
Number of Terminal Block Positions	24				48			
Operating Temperature Range	32 to 140°F (0 to 60°C)							
Terminal Block Contacts	Copper alloy, tin-lead plated							
Wire Range (Rated Cross Section) 2	12–24 AWG Solid or Stranded Copper Conductor (2.5 mm²)							
Wire Strip Length	0.24–0.27 in (6-7 mm)							
Screw Torque	4.4 in·lbs (0.5 N·m)							
Connector Type	Molex Micro-Fit 3.0, 24 pin connector Example: Receptacle 43020-2400 Pins 43031 Series, Male				3M 34000 Series IDC Connector, strain relief is required to latch to header. Example: Socket 3417-7640, Strain relief 3448-3040			
Connecting Cables (Sold Separately)	Click on link: Wiring Selection Guides. Click on link: Connection Cable Specifications Tables.							
Cable/Wire Clearance	0.5 in (12.7 mm) Required							
Mounting Restrictions	None							
Approvals	UL 508 File E139594, Canada & USA CE (EN61131-2*)							

1 Connecting cables are for internal wiring only.
2 Use Class 2 power supply; use conductors rated 60°/75°C

Note: See wiring details and dimensional drawings on our Web site at: http://www.automationdirect.com/static/manuals/ziplinks/ziplinks.html.

Common Connector Module

Common Connection standalone module provides low-cost and compact field wiring screw termination solutions for power and ground connections. Module mounts on 35mm DIN rail (part #DN-R35S1) or 15mm DIN rail (part #DN-R15S1).

ZL-RTB-COM

Input Terminal Block Specifications				
Feedthrough Module	***Part #***	***Pcs/Pkg***	***Price/Pkg***	***Weight (lbs)***
	ZL-RTB-COM	***1***	***$78.00***	***0.35***
Description	40-Pole Common Connector Module			
Voltage Rating	250 VAC/VDC			
Maximum Operating Range	300 VAC/VDC			
Maximum Current	10A (Total all 40 positions), 0.5 A/pt			
Terminal Block Contacts	Copper alloy, tin-lead plated			
Wire Range (Rated Cross Section)	12–24 AWG Solid or Stranded Copper Conductor (2.5 mm²)			
Wire Strip Length	0.24–0.27 in (6–7 mm)			
Screw Size	M2.5			
Screw Torque	3.5 in·lbs (0.4 N·m)			

Common Specifications	
Operating Temperature	0 to 60°C (32 to 140°F) IEC 60068-2-14 (Test Nb, Thermal Shock)
Storage Temperature	-20 to 70°C (-4 to 158°F) IEC 60068-2-1 (Test Ab, Cold) IEC 60068-2-2 (Test Bb, Dry Heat) IEC 60068-2-14 (Test Na, Thermal Shock)
Humidity	5 to 95% (Non-condensing) IEC 60068-2-30 (Test Db, Damp Heat)
Environmental Air	No corrosive gases permitted (EN61131-2 pollution degree 1)
Vibration Resistance	MIL STD 810C 514.2 IEC60068-2-6 (Test Fc)
Shock Resistances	MIL STD 810C 516.2 IEC60068-2-27 (Test Ea)
Agency Approvals	UL 508 File E139594, Canada & USA CE (EN61131-2:2007)

Note: See wiring details and dimensional drawings on our Web site at: http://www.automationdirect.com/static/manuals/ziplinks/ziplinks.html.

Fuse Modules

Fuse modules provide fuse protection for PLC output devices. Use with Do-more, CLICK, DL05/06/205/305/405 PLCs.

Modules mount on 35mm DIN rail (part #DN-R35S1) or 15mm DIN rail (part #DN-R15S1).

ZL-RFU20

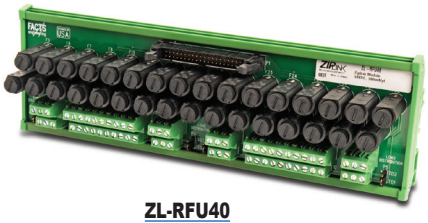

ZL-RFU40

Specifications								
Fuse Modules	***Part #***	***Pcs/ Pkg***	***Price/Pkg***	***Weight (lbs)***	***Part #***	***Pcs/ Pkg***	***Price/Pkg***	***Weight (lbs)***
	ZL-RFU20	***1***	***$158.00***	***0.79***	***ZL-RFU40***	***1***	***$257.00***	***1.10***
Description 4	16-point fuse connector module				32-point fuse connector module			
Operation Voltage	0–250 VAC/0–75 VDC 1				0–30 VDC			
UL Rated Current	1A per point				0.3 A per circuit 2			
Maximum Current per Circuit	2A				0.4 A			
Maximum Current per Module	32A				20A			
Number of Circuits	16				32			
Field to Logic Side Isolation	1800VAC applied for 1 second							
Insulation Resistance	>10MΩ @ 500VDC							
Surrounding Temperature Range	32 to 140°F (0 to 60°C)							
Terminal Block Contacts	Copper alloy, tin-lead plated							
Wire Range (Rated Cross Section) 3	12–24 AWG Solid or Stranded Copper Conductor (2.5 mm²)							
Wire Strip Length	0.24–0.27 in (6–7 mm)							
Screw Torque	4.4 in·lbs (0.5 N·m)							
Fuses (Not Included)	Sixteen 5x20 mm, 250V, 2 Amp fast blow				Thirty-two 5x20 mm, 250V, 0.4 Amp fast blow			
Replacement Fuse	See Edison 5x20 mm Glass Fuse Section range up to a Max. 2 Amp fuse				See Edison 5x20 mm Glass Fuse Section range up to a Max. 0.4 Amp fuse			
Connector Type	Molex Micro-Fit 3.0, 24 pin connector Example receptacle 43020-2400, Pins 43031 Series, Male				3M 34000 Series IDC Connector, strain relief is required to latch to header. Example: Socket 3417-7640, Strain relief 3448-3040			
Connecting Cables (Sold Separately)	Click on link: Wiring Selection Guides. Click on link: Connection Cable Specifications Tables.							
Cable/Wire Clearance	0.5 in (12.7 mm) Required							
Mounting Restrictions	None							
Approvals	File # E200031 UL, cUL, Class 1, Division 2, Groups A,B,C,D Hazardous Locations, CE, EN 61131-2:2007							

1 UL rated 0–75 VDC applies when using a DC rated fuse (not supplied), example: Littelfuse 217 series.
2 Use Class 2 power supply - This refers to the ZL-RFU40 only.
3 Use conductors rated 60°/75°C
4 Connecting cables are for internal wiring only.

Note: See wiring details and dimensional drawings on our Web site at: http://www.automationdirect.com/static/manuals/ziplinks/ziplinks.html.

Fuse Modules

ZIPLink reduced-width stand-alone fuse module. Use with Productivity, Do-more, CLICK, DL05/06/205/305/405 PLCs.

Modules mount on 35mm DIN rail (part #DN-R35S1) or 15mm DIN rail (part #DN-R15S1).

ZL-FUSE-16

ZL-FUSE-16 Specifications				
Fuse Module	***Part #***	***Pcs/ Pkg***	***Price/Pkg***	***Weight (lbs)***
	ZL-FUSE-16	***1***	***$152.00***	***0.47***
Description	16-point fuse connector module			
Operation Voltage	0–250 V AC/DC (-10%/+20%)			
UL Rated Current	5A/250V per point			
Maximum Current per Circuit	8A			
Fuse Size (Not Included)*	Sixteen 5x20 mm			
Terminal Block Contacts	Copper alloy, tin-lead plated			
Wire Range (Rated Cross Section)	12-24 AWG Solid or Stranded Copper Conductor (2.5 mm²)			
Wire Strip Length	0.24–0.27 in (6–7 mm)			
Screw Torque	4.4 in·lbs (0.5 N·m)			

*** Fuses not supplied. See AutomationDirect GMA, GMC, or S500 fuses.**

Note: See wiring details and dimensional drawings on our Web site at: http://www.automationdirect.com/static/manuals/ziplinks/ziplinks.html.

24V DC-Powered Relay Modules

DC-powered relay modules provide isolation, switch high current (10A) loads, and include diode protection to prevent voltage spikes at the relay coil from damaging connected 16-point PLC I/O modules. Relays are included with these modules.

Modules mount on 35mm DIN rail (part #DN-R35S1) or 15mm DIN rail (part #DN-R15S1).

ZL-RRL16-24-1

ZL-RRL16-24-2

Specifications

24V DC-Powered Relay Module	Part #	Pcs/ Pkg	Price/Pkg	Weight (lbs)	Part #	Pcs/ Pkg	Price/Pkg	Weight (lbs)
	ZL-RRL16-24-1	1	$233.00	1.45	ZL-RRL16-24-2	1	$233.00	1.45
Description	16 Output Relay module, sinking, with LEDs, 24VDC coil				16 Output Relay module, sourcing, with LEDs, 24VDC coil			
Operating Frequency	20 cycles per minute electrical, 300 cycles per minute mechanical							
Isolation Coil to Contact	2500VAC for 1 minute							
Isolation NC Contact to NO Contact Same Relay	1000VAC for 1 minute							
Isolation Between Relays	1000VAC for 1 minute							
Red LED Indicator State Relay	ON = relay energized, OFF = relay de-energized				ON = relay de-energized, OFF = relay energized			
Operating Temperature Range	32 to 140°F (0 to 60°C)							
Humidity Range	45 to 85% RH							
Terminal Block Contacts	Copper alloy, tin-lead plated							
Wire Range *	12–24 AWG Solid or Stranded Conductor							
Wire Strip Length	0.24–0.27 in (6–7 mm)							
Screw Torque	4.4 in·lbs (0.5 N·m)							
Connector Type	Molex Micro-Fit 3.0, 24 pin connector, example receptacle 43020-2400, Pins 43031 Series, Male							
Connecting Cables (Sold Separately)	Click on link: Wiring Selection Guides. Click on link: Connection Cable Specifications Tables.							
Replacement Relays	ZL-RELAY-24X4, Qty. 4/pkg							
Cable/Wire Clearance	0.5 in (12.7 mm) required							
Mounting Restrictions	Horizontal mounting only, non-corrosive environment							
Approvals	File # E157382 UL, cUL 508							

Relay Specifications **

Contact		Coil	
Current Rating	30VDC @ 10A, 250VAC @ 8A, General Use	Input Voltage Rating	24VDC (-20%/+30%)
Contact Type	1 Form C (SPDT)	Maximum Continuous Coil Voltage	31.2 VDC
Contact Voltage (per point) *	250VAC/30VDC	Rated Current per Coil	16.7 mA (±10%) @ 24VDC
Maximum Power Inductive	2000VA General Use	Coil Resistance	1440Ω (±10%)
Maximum Power Resistive	AC 2000VA, DC 300W	Power Consumption per Coil	0.4 W
Maximum Switching Voltage	250VAC, 110VDC	Total Coil Supply Current Max.	293mA (all relays on)
Minimum Load	10mA @ 5VDC	Pick Up Current Max. per Coil	15mA
Contact Resistance	100mΩ Max @ 1A, 6VDC	Drop-Out Voltage Min.	1.2 VDC
Contact Material	AgNi (Silver Nickel Alloy)	Pick-Up Voltage Max.	19.2 VDC
Vibration Resistance	10 to 55 Hz dual amplitude width 1.5 mm	Off to On/On to Off Response Time	12ms / 8ms
Shock Resistances	1000m/s² endurance, 100m/s² operation		
Service Life	Mechanical: 10,000,000 Operations at no load condition; Electrical: 100,000 Operations at rated resistive load		

*** Use conductors rated for 60°/75°C for relay outputs.**
**** Relay modules are reverse polarity protected and will not operate if reverse voltage is connected.**

Note: See wiring details and dimensional drawings on our Web site at: http://www.automationdirect.com/static/manuals/ziplinks/ziplinks.html.

24V DC-Powered Relay Modules

DC-powered relay modules provide isolation, switch high current (10A) loads, and include diode protection to prevent voltage spikes at the relay coil from damaging connected 16-point PLC I/O modules. Relays are included with these modules.

Modules mount on 35mm DIN rail (part #DN-R35S1) or 15mm DIN rail (part #DN-R15S1).

ZL-RRL16W-24-1

ZL-RRL16W-24-2

Specifications

24V DC-Powered Relay Module	Part #	Pcs/ Pkg	Price/Pkg	Weight (lbs)	Part #	Pcs/ Pkg	Price/Pkg	Weight (lbs)
	ZL-RRL16W-24-1	1	$226.00	1.45	ZL-RRL16W-24-2	1	$226.00	1.45
Description	16 Sinking Output Relay module with LEDs, 24VDC coil				16 Sourcing Output Relay module with LEDs, 24VDC coil			
Operating Frequency	20 cycles per minute electrical, 300 cycles per minute mechanical							
Isolation Coil to Contact	2500VAC for 1 minute							
Isolation NC Contact to NO Contact Same Relay	1000VAC for 1 minute							
Isolation Between Relays	1000VAC for 1 minute							
Red LED Indicator State Relay	ON = relay energized, OFF = relay de-energized				ON = relay de-energized, OFF = relay energized			
Operating Temperature Range	32 to 140°F (0 to 60°C)							
Humidity Range	45 to 85% RH							
Terminal Block Contacts	Copper alloy, tin-lead plated							
Wire Range *	12–24 AWG Solid or Stranded Conductor							
Wire Strip Length	0.24–0.27 in (6–7 mm)							
Screw Torque	4.4 in·lbs (0.5 N·m)							
Connector Type	Molex Micro-Fit 3.0, 24 pin connector, example receptacle 43020-2400, Pins 43031 Series, Male							
Connecting Cables (Sold Separately)	Click on link: Wiring Selection Guides. Click on link: Connection Cable Specifications Tables.							
Replacement Relays	ZL-RELAY-24X4, Qty. 4/pkg							
Cable/Wire Clearance	0.5 in (12.7 mm) required							
Mounting Restrictions	Horizontal mounting only, non-corrosive environment							
Approvals	File # E157382 UL, cUL 508, CE, EN 61131-2:2007							

Relay Specifications * *

Contact		Coil	
Current Rating	30VDC @ 10A, 250VAC @ 8A, General Use	Input Voltage Rating	24VDC (-20%/+30%)
Contact Type	1 Form C (SPDT)	Maximum Continuous Coil Voltage	31.2 VDC
Contact Voltage (per point) *	250VAC / 30VDC	Rated Current per Coil	16.7 mA (±10%) @ 24VDC
Maximum Power Inductive	2000VA General Use	Coil Resistance	1440Ω (±10%)
Maximum Power Resistive	AC 2000VA, DC 300W	Power Consumption per Coil	0.4 W
Maximum Switching Voltage	250VAC, 110VDC	Total Coil Supply Current Max.	293mA (all relays on)
Minimum Load	10mA @ 5VDC	Pick Up Current Max. per Coil	15mA
Contact Resistance	100mΩ Max @ 1A, 6VDC	Drop-Out Voltage Min.	1.2 VDC
Contact Material	AgNi (Silver Nickel Alloy)	Pick-Up Voltage Max.	19.2 VDC
Vibration Resistance	10 to 55 Hz dual amplitude width 1.5 mm	Off to On/On to Off Response Time	12ms / 8ms
Shock Resistances	1000m/s² endurance, 100m/s² operation		
Service Life	Mechanical: 10,000,000 Operations at no load condition; Electrical: 100,000 Operations at rated resistive load		

*** Use conductors rated for 60°/75°C for relay outputs.**
*** * Relay modules are reverse polarity protected and will not operate if reverse voltage is connected.**

Note: See wiring details and dimensional drawings on our Web site at: http://www.automationdirect.com/static/manuals/ziplinks/ziplinks.html.

24V DC-Powered Fused Relay Modules

DC-powered fused relay modules provide isolation, switch high current (8A) loads, and includes fused protection to prevent voltage spikes at the relay coil from damaging connected 16-point PLC I/O modules. Relays are included with these modules.

Modules mount on 35mm DIN rail (part #DN-R35S1) or 15mm DIN rail (part #DN-R15S1).

ZL-RRL16F-24-1

ZL-RRL16F-24-2

Specifications

24V DC-Powered Fused Relay Module	Part #	Pcs/ Pkg	Price/Pkg	Weight (lbs)	Part #	Pcs/ Pkg	Price/Pkg	Weight (lbs)
	ZL-RRL16F-24-1	1	$302.00	2.05	ZL-RRL16F-24-2	1	$302.00	2.05
Description	16 Fused Output Relay module, sinking, with LEDs, 24VDC coil				16 Fused Output Relay module, sourcing, with LEDs, 24VDC coil			
Mechanical Life	1,000,000 Operations no load condition							
Electrical Life	1,000,000 Operations at rated resistive load							
Operating Frequency	6 cycles per minute electrical, 180 cycles per minute mechanical							
Isolation Coil to Contact	2500VAC for 1 minute							
Isolation NC Contact to NO Contact	1000VAC for 1 minute							
Isolation Between Relays	1000VAC for 1 minute							
Red LED Indicator State Relay	ON = relay energized, OFF = relay de-energized				ON = relay de-energized, OFF = relay energized			
Operating Temperature Range	32 to 140°F (0 to 60°C)							
Humidity Range	45 to 85% RH							
Vibration Resistance	10 to 55 Hz dual amplitude width 1.5 mm							
Shock Resistances	1000m/s2 endurance, 100m/s2 operation							
Terminal Block Contacts	Copper alloy, tin-lead plated							
Wire Range *	12–24 AWG Solid or Stranded Conductor							
Wire Strip Length	0.24–0.27 in (6–7 mm)							
Screw Torque	4.4 in·lbs (0.5 N·m)							
Connector Type	Molex Micro-Fit 3.0, 24-pin connector, example receptacle 43020-2400, Pins 43031 Series, Male							
Replacement Relays	ZL-RELAY-24X4, Qty. 4/pkg							
Fuses (Sold Separately)	Sixteen 5x20mm, 250V							
Replacement Fuses	See Edison 5x20mm Glass Fuse section, range up to Max. 10							
Cable/Wire Clearance	0.5 in (12.7 mm)							
Approvals	File # E139594 UL, cUL 508, CE, EN61131-2:2007							

Relay Specifications **

Contact		Coil	
Current Rating	30VDC @ 8A, 250VAC @ 8A, General Use	Input Voltage Rating	24VDC (-20%/+30%)
Contact Type	1 Form C (SPDT)	Maximum Continuous Coil Voltage	31.2 VDC
Contact Voltage (per point) *	250VAC/30VDC	Rated Current per Coil	16.7 mA (±10%) @ 24VDC
Maximum Power Inductive	2000VA General Use	Coil Resistance	1440Ω (±10%)
Maximum Power Resistive	AC 2000VA, DC 240W	Power Consumption per Coil	0.4 W
Maximum Switching Voltage	250VAC, 300VDC	Total Coil Supply Current Max.	400mA (Total 16 relays)
Minimum Load	10mA @ 5VDC	Pick Up Current Max. per Coil	15mA
Contact Resistance	100mΩ Max @ 1A, 6VDC	Drop-Out Voltage Min.	1.2 VDC
Contact Capacity	5FLA/30LRA, 250VAC, 1/2 HP, 250VAC, Pilot Duty B300-C300	Pick-Up Voltage Max.	19.2 VDC
Contact Material	AgNi (Silver Nickel Alloy)	Off to On/On to Off Response Time	12ms/8ms

*** Use conductors rated for 60°/75°C for relay outputs.**
**** Relay modules are reverse polarity protected and will not operate if reverse voltage is connected.**

Note: See wiring details and dimensional drawings on our Web site at: http://www.automationdirect.com/static/manuals/ziplinks/ziplinks.html.

24VDC Stand-Alone Relay Modules

Our single and four-socket 24 VDC stand-alone relay modules use plug-in relays for switching high current (10A) loads. Relays are included with the modules.

Modules mount on 35mm DIN rail (part #DN-R35S1) or 15mm DIN rail (part #DN-R15S1).

ZL-RLS1-24

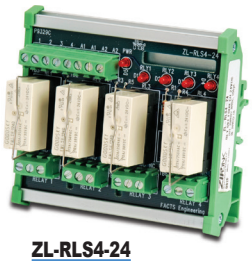

ZL-RLS4-24

Specifications 1								
24VDC Stand-Alone Relay Modules	Part #	Pcs/ Pkg	Price/Pkg	Weight (lbs)	Part #	Pcs/ Pkg	Price/Pkg	Weight (lbs)
	ZL-RLS1-24	1	$34.00	0.10	ZL-RLS4-24	1	$93.00	0.45
Description	Single-socketed relay with 24VDC relay with LEDs				Four-socketed relays with 24VDC relays with LEDs			
Mechanical Life	10,000,000 Operations at no load condition							
Electrical Life	100,000 Operations at rated resistive load							
Operating Frequency	20 cycles per minute electrical, 300 cycles per minute mechanical							
Isolation Coil to Contact	2500VAC for 1 minute							
Isolation NC Contact to NO Contact Same Relay	1000VAC for 1 minute							
Isolation Between Relays	N/A				1000VAC for 1 minute			
Red LED Indicator State Relay	ON = relay energized, OFF = relay de-energized							
Operating Temperature Range	32 to 140°F (0 to 60°C)							
Humidity Range	45 to 85% RH							
Vibration Resistance	10 to 55 Hz dual amplitude width 1.5 mm							
Shock Resistances	1000m/s² endurance, 100m/s² operation							
Terminal Block Contacts	Copper alloy, tin-lead plated							
Wire Range 2	12–24 AWG Solid or Stranded Conductor							
Wire Strip Length	0.24–0.27 in (6–7 mm)							
Screw Torque	4.4 in·lbs (0.5 N·m)							
Replacement Relays	ZL-RELAY-24X4, Qty. 4/pkg							
Cable/Wire Clearance	0.5 in (12.7 mm) Required							
Approvals	File # E157382 UL, cUL 508							

Relay Specifications			
Contact		Coil	
Current Rating	30VDC @ 10A 250VAC @ 8A General Use	Input Voltage Rating	24VDC (-20%/+30%)
Contact Type	1 Form C (SPDT)	Maximum Continuous Coil Voltage	31.2 VDC
Contact Voltage (per point) 2	250VAC/30VDC	Rated Current per Coil	16.7 mA (±10%) @ 24 VDC
Maximum Power Inductive	2000VA General Use	Coil Resistance	1440Ω (±10%)
Maximum Power Resistive	AC 2000VA, DC 300W	Power Consumption per Coil	0.4 W
Maximum Switching Voltage	250VAC, 110VDC	Pick Up Current Max. per Coil	15mA
Minimum Load	10mA @ 5VDC	Drop-Out Voltage Min.	1.2 VDC
Contact Resistance	100mΩ Max @ 1A, 6VDC	Pick-Up Voltage Max.	19.2 VDC
Contact Material	AgNi (Silver Nickel Alloy)	Off to On/On to Off Response Time	12ms / 8ms

[1] These modules do not provide transient protection on the relay coil.
[2] Use conductors rated for 60°/75°C for relay outputs.

Note: See wiring details and dimensional drawings on our Web site at: http://www.automationdirect.com/static/manuals/ziplinks/ziplinks.html.

120VAC Stand-Alone Relay Modules

Our AC-powered stand-alone relay modules provide isolation, switch high current (10A) loads and are offered in single or 4-socket modules. Relays are included with the modules.

Modules mount on 35mm DIN rail (part #DN-R35S1) or 15mm DIN rail (part #DN-R15S1).

ZL-RLS1-120

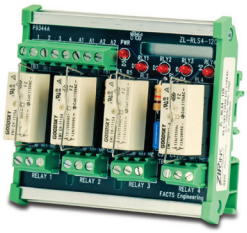

ZL-RLS4-120

Specifications								
120VAC Stand-Alone Relay Modules	Part #	Pcs/ Pkg	Price/Pkg	Weight (lbs)	Part #	Pcs/ Pkg	Price/Pkg	Weight (lbs)
	ZL-RLS1-120	1	$37.50	0.10	ZL-RLS4-120	1	$110.00	0.45
Description	Single-socketed relay with 120VAC relay with LED				Four-socketed relays with 120VAC relays with LEDs			
Mechanical Life	10,000,000 Operations at no load condition							
Electrical Life	100,000 Operations at rated resistive load							
Operating Frequency	20 cycles per minute electrical, 300 cycles per minute mechanical							
Isolation Coil to Contact	2500VAC for 1 minute							
Isolation NC Contact to NO Contact Same Relay	1000VAC for 1 minute							
Isolation Between Relays	N/A				1000VAC for 1 minute			
Red LED Indicator State Relay	ON = relay energized, OFF = relay de-energized							
Operating Temperature Range	32 to 140°F (0 to 60°C)							
Humidity Range	45 to 85% RH							
Vibration Resistance	10 to 55 Hz dual amplitude width 1.5 mm							
Shock Resistances	1000m/s² endurance, 100m/s² operation							
Terminal Block Contacts	Copper alloy, tin-lead plated							
Wire Range*	12–24 AWG Solid or Stranded Conductor							
Wire Strip Length	0.24–0.27 in (6–7 mm)							
Screw Torque	4.4 in·lbs (0.5 N·m)							
Replacement Relays	ZL-RELAY-120X4, Qty. 4/pkg							
Cable/Wire Clearance	0.5 in (12.7 mm) Required							
Approvals	File # E157382 UL, cUL 508							

Relay Specifications			
Contact		Coil	
Current Rating	30VDC @ 10A 250VAC @ 8A General Use	Input Voltage Rating	115VAC (-20%/+30%), 50–60Hz
Contact Type	1 Form C (SPDT)	Maximum Continuous Coil Voltage	150VAC
Contact Voltage (per point) *	250VAC/30VDC	Rated Current per Coil	7.65 mA (±10%) @ 115VAC 50Hz 6.30 mA (±10%) @ 115VAC 60Hz
Maximum Power Inductive	2000VA General Use	Coil Resistance	8100Ω (±10%)
Maximum Power Resistive	AC 2000VA, DC 300W	Power Consumption per Coil	0.88 W @ 50Hz 0.73 W @ 60Hz
Maximum Switching Voltage	250VAC, 110VDC	Drop-Out Voltage Min.	34.5 VAC
Minimum Load	10mA @ 5VDC	Pick-Up Voltage Max.	92VAC
Contact Resistance	100mΩ Max @ 1A, 6VDC	Off to On/On to Off Response Time	12ms / 8ms
Contact Material	AgNi (Silver Nickel Alloy)		

*** Use conductors rated for 60°/75°C for relay outputs.**

Note: See wiring details and dimensional drawings on our Web site at: http://www.automationdirect.com/static/manuals/ziplinks/ziplinks.html.

Sensor Input Modules

LED modules provide simple and logical termination for 3-wire sensors or other devices. These modules offer visual LED indication of device input status for quick troubleshooting. The LED/sensor modules are available in 16 and 32-point versions.

Modules mount on 35mm DIN rail (part #DN-R35S1) or 15mm DIN rail (part #DN-R15S1).

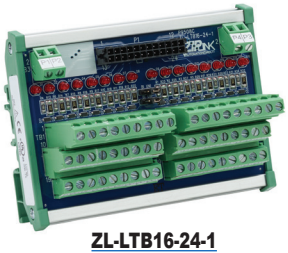

ZL-LTB16-24-1

ZL-LTB32-24-1

Specifications								
Sensor Input Modules	***Part #***	***Pcs/ Pkg***	***Price/Pkg***	***Weight (lbs)***	***Part#***	***Pcs/ Pkg***	***Price/Pkg***	***Weight (lbs)***
	ZL-LTB16-24-1	***1***	***$113.00***	***0.49***	***ZL-LTB32-24-1***	***1***	***$181.00***	***0.99***
Description *	16-point, 24VDC Sensor Input Module with LEDs				32-point, 24VDC Sensor Input Module with LEDs			
Maximum Voltage	50 VAC/VDC (-10%/+20%)							
UL Voltage Rating	0–30 VAC/VDC (-10%/+20%)							
Nominal Current per Input	I/O module max. input current per point plus 2mA for LED indicator							
Maximum Current per Input	500mA							
Maximum Current per Power Group (P1, P2, P3, or P4)	4A							
Operating Temperature Range	32 to 140°F (0 to 60°C)							
LED Indicator Circuit	2mA @ 24VDC per LED							
Terminal Block Contacts	Copper alloy, tin-lead plated							
Wire Range (Rated Cross Section)	12–24 AWG Solid or Stranded Copper Conductor (2.5 mm²)							
Wire Strip Length	0.24–0.27 in (6–7 mm)							
Screw Torque	4.4 in·lbs (0.5 N·m)							
Connector Type	Molex Micro-Fit 3.0, 24 pin connector Example: Receptacle 43020-2400 Pins 43031 Series, Male				3M 34000 Series IDC Connector, strain relief is required to latch to header. Example: Socket 3417-7640, Strain relief 3448-3040			
Connecting Cables (Sold Separately)	Click on link: Wiring Selection Guides. Click on link: Connection Cable Specifications Tables.							
Cable/Wire Clearance	Minimum requirement: 0.5 in (12.7 mm)							
Mounting Restrictions	None							
Approvals	File # E139594, UL, cUL, CE, EN 61131-2:2007							

***Connecting cables are for internal wiring only.**

Note: See wiring details and dimensional drawings on our Web site at: http://www.automationdirect.com/static/manuals/ziplinks/ziplinks.html.

24VDC and 120VAC Transorb Modules

Our transorb diode modules are 8-channel devices used to suppress counter-electromotive force (CEMF) generated by switching inductive loads such as solenoids, contactors, motor starters, interposing relays, etc., that may cause an unexpected PLC system shutdown.

Modules mount on 35mm DIN rail (part #DN-R35S1) or 15mm DIN rail (part #DN-R15S1).

ZL-TSD8-24

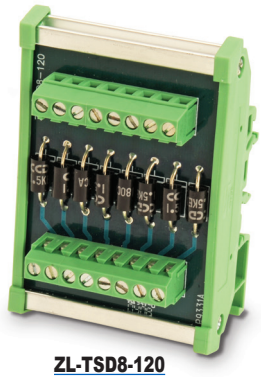

ZL-TSD8-120

Specifications

24VDC and 120VAC Transorb Modules	Part #	Pcs/ Pkg	Price/Pkg	Weight (lbs)	Part #	Pcs/ Pkg	Price/Pkg	Weight (lbs)
	ZL-TSD8-24	1	$46.50	0.19	ZL-TSD8-120	1	$47.00	0.22
Description * *	8-Channel Transient Voltage Suppressor Module, 24VDC				8-Channel Transient Voltage Suppressor Module, 120VAC			
Number of Circuits	8							
UL Voltage Rating	24VDC Voltage Breakdown: Min: 28.5 VDC Normal: 30VDC Max: 31.5 VDC				120VAC Voltage Breakdown: Min: 209 Normal: 220 Max: 231			
Peak Power Dissipation	1500W surge capability at 1ms							
Maximum Surge Current	2A							
Terminal Block Contacts	Copper alloy, tin-lead plated							
1-Wire Range (Rated Cross Section) *	12–24 AWG Solid or Stranded Copper Conductor (2.5 mm²)							
2-Wire Range (Rated Cross Section) *	16–24 AWG Solid or Stranded Copper Conductor (2.5 mm²)							
Wire Strip Length	0.24–0.27 in (6–7 mm)							
Screw Torque	4.4 in·lbs (0.5 N·m)							
Surrounding Temperature Range	32 to 140°F (0 to 60°C)							
Cable/Wire Clearance	0.5 in (12.7 mm) Required							
Mounting Restrictions	None							
Approvals	File # E200031 UL, cUL, Class 1, Division 2, Groups A,B,C,D Hazardous Locations, CE, EN 61131-2:2007							

*** Use conductors rated for 60°/75°C.**
*** *Connecting cables are for internal wiring only.**

The waveform in the figure below shows the energy released when opening a contact switching a 24VDC solenoid.
Notice the large voltage spike.

ZL-TSD8-24

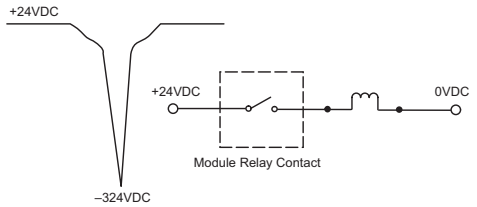

This figure shows the same circuit with a transorb (TVS) across the coil. Notice that the voltage spike is significantly reduced.

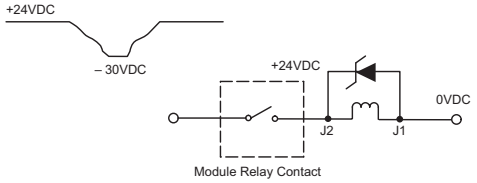

The waveform in the figure below shows the energy released when opening a contact switching a 120VAC solenoid.
Notice the large voltage spike.

ZL-TSD8-120

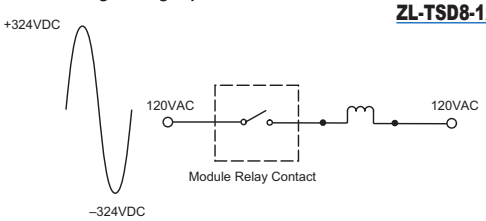

This figure shows the same circuit with a transorb (TVS) across the coil. Notice that the voltage spike is significantly reduced.

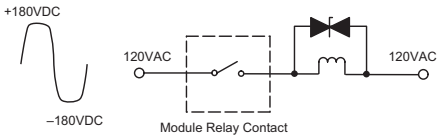

Note: See wiring details and dimensional drawings on our Web site at: http://www.automationdirect.com/static/manuals/ziplinks/ziplinks.html.

D-Sub Feedthrough Modules

Available in male and female, 9, 15 or 25-pin versions, these connector modules provide a fast, convenient transition between D-Sub connectors and field wiring through the use of screw terminals.

Modules mount on 35mm DIN rail (part #DN-R35S1) or 15mm DIN rail (part #DN-R15S1).

ZL-RTB-DB09

ZL-RTB-DB15

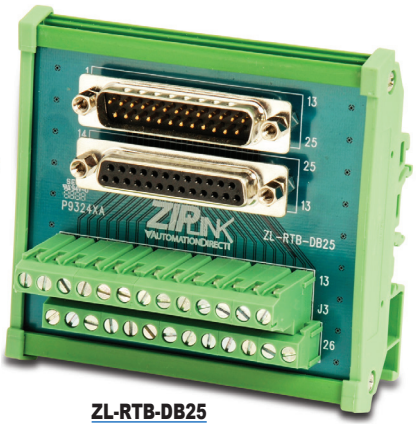

ZL-RTB-DB25

Specifications												
D-Sub Feedthrough Modules	***Part #***	***Pcs/ Pkg***	***Price/Pkg***	***Weight (lbs)***	***Part #***	***Pcs/ Pkg***	***Price/Pkg***	***Weight (lbs)***	***Part #***	***Pcs/ Pkg***	***Price/Pkg***	***Weight (lbs)***
	ZL-RTB-DB09	***1***	***$37.50***	***0.08***	***ZL-RTB-DB15***	***1***	***$47.50***	***0.13***	***ZL-RTB-DB25***	***1***	***$59.00***	***0.32***
Description 2	9-pin male and female D-subs to terminal blocks				15-pin male and female D-subs to terminal blocks				25-pin male and female D-subs to terminal blocks			
UL Voltage Rating 3	30VDC											
Maximum Current per Circuit	1A											
Number of Circuits	9				15				25			
Wire Range (Rated Cross Section) 1	12–24 AWG Solid or Stranded Copper Conductor (2.5 mm²)											
Wire Strip Length	0.24–0.27 in (6–7 mm)											
Screw Torque	4.4 in·lbs (0.5 N·m)											
Surrounding Temperature Range	32 to 140°F (0 to 60°C)											
Terminal Block Contacts	Copper alloy, tin-lead plated											
Cable/Wire Clearances	0.5 in (12.7 mm) Required											
Mounting Restrictions	None											
Connecting Cables (Sold Separately)	ZL-DB9-CBL-2 Click on link: Connection Cable Specifications Tables.				ZL-DB15-CBL-2 Click on link: Connection Cable Specifications Tables.				ZL-DB25-CBL-2 Click on link: Connection Cable Specifications Tables.			
Approvals	File # E200031 UL, cUL, Class 1, Division 2, Groups A,B,C,D Hazardous Locations, CE, EN 61131-2:2007											

1 Use conductors rated for 60°/75°C.
2 Connecting cables are for internal wiring only.
3 Use Class 2 power supply.

Note: See wiring details and dimensional drawings on our Web site at: http://www.automationdirect.com/static/manuals/ziplinks/ziplinks.html.

RJ12 and RJ45 Feedthrough Modules

The RJ12 and RJ45 feedthrough modules provide convenient break-out of wiring to terminal blocks.

Modules mount on 35mm DIN rail (part #DN-R35S1) or 15mm DIN rail (part #DN-R15S1).

ZL-RTB-RJ12

ZL-RTB-RJ45

Specifications		
	Part #	
	ZL-RTB-RJ12	***ZL-RTB-RJ45***
Price	$31.50	$40.50
Pcs/Pkg	1	
Weight (lbs)	0.32	0.45
Description [3]	RJ12 Connector to terminal block	RJ45 Connector to terminal block
UL Voltage Rating [1]	30VDC	
Maximum Current per Circuit	1A	
Number of Circuits	6	8
Terminal Block Contacts	Copper alloy, tin-lead plated	
Wire Range (Rated Cross Section) [2]	12–24 AWG Solid or Stranded Copper Conductor (2.5 mm²)	
Wire Strip Length	0.24–0.27 in (6–7 mm)	
Screw Torque	4.4 in·lbs (0.5 N·m)	
Surrounding Temperature Range	32 to 140°F (0 to 60°C)	
Cable/Wire Clearance	0.5 in (12.7 mm) Required	
Mounting Restrictions	None	
Connecting Cables (Sold Separately)	ZL-RJ12-CBL-2, ZL-RJ12-CBL-2P, GS-RJ12-CBL-2, SVC-232RJ12-CBL-2 Click on link: Connection Cable Specifications Tables	Cat5e Cable w/RJ45 connectors
Approvals	File # E200031 UL, cUL, Class 1, Division 2, Groups A,B,C,D Hazardous Locations, CE, EN 61131-2:2007	File # E139594 UL, cUL, CE EN 61131-2:2007

1 Use Class 2 power supply.
2 Use conductors rated for 60°/75°C.
3 Connecting cables are for internal wiring only.

Note: See wiring details and dimensional drawings on our Web site at: http://www.automationdirect.com/static/manuals/ziplinks/ziplinks.html.

Communication Port Adapters

Communication adapters eliminate the hassle associated with connecting crimp or solder connectors to PLC communication ports and 9-pin serial ports. The communication adapters offer fast and convenient screw terminal connections for the DL06 CPUs, Advantech Modbus gateways and other devices with D-sub ports.

The ZL-CMA15L adapter offers transmit and receive LEDs, a jumper selectable network termination resistor, and circuit surge protection.

ZL-CMA9

ZL-CMA15

ZL-CMA15L

Specifications			
Communication Port Adapters	***ZL-CMA9***	***ZL-CMA15***	***ZL-CMA15L***
Pcs/Pkg	1	1	1
Price/Pkg	$26.00	$19.50	$59.00
Weight (lbs)	ZL-CMA9: 0.03 M to M adapter: 0.02	0.04	0.06
Description	***ZIP***Link port adapter communication module, 1 port, 9-position terminal block to 9-pin D-sub female. Includes 9-pin D-sub male to male adapter.	DL06, D2-250-1 and D2-262 PLC Port 2 adapter: HD 15-pin D-sub to terminal block	
Communications Interface	RS232, RS422, RS485		
Indication Transmit Data	N/A	N/A	Green LED
Indication Receive Data	N/A	N/A	Green LED
RS232 Surge Protection	N/A	N/A	2 Circuits clamped by Zener transient voltage suppressors
RS422/485 Surge Protection	N/A	N/A	4 Circuits clamped by low capacitance Zener diodes
RS422/485 Network Termination Resistor	N/A	N/A	Jumper Selectable 120Ω
Voltage Rating [1]	30VDC		
Maximum Current per Circuit	1A		
Supported Signal Types	RS422/485 TXD+ RS422/485 RXD+ RS232 TXD, +5VDC PWR	RS422/485 TXD– RS422/485 RXD– RS232 RXD Ground	
Terminal Block Contacts	Copper alloy, tin-lead plating		
Wire Range (Rated Cross Section) [2]	16–30 AWG Solid or Stranded Conductor (1.5 mm²)		16–28 AWG Solid or Stranded Conductor (1.5 mm²)
Wire Strip Length	0.19–0.24 in [5–6 mm]	0.24–0.27 in [6–7 mm]	
Screw Torque	1.7 in·lbs [0.2 N·m]		
Operating Temperature Range	32 to 140°F [0 to 60°C]		
Drawing Link	PDF	PDF	PDF
Approvals	EN 61010-1, EN61010-2-201	EN 61010-1, EN61010-2-201 File # E200031 Approved for use in Class 1 Division 2, Groups A, B, C, D Hazardous Locations	

1 Use Class 2 power supply.
2 Use conductors rated for 60°/75°C.

Note: See wiring details and dimensional drawings on our Web site at: http://www.automationdirect.com/static/manuals/ziplinks/ziplinks.html.

Communication Distribution Modules

The RJ12 multi-port distribution modules allow for fast and convenient RS485 multi-drop connections.

Uses include serial network communication multi-drop to GS series drives, DuraPulse drives and SureServo drives.

Modules mount on 35mm DIN rail (part #DN-R35S1) or 15mm DIN rail (part #DN-R15S1).

ZL-CDM-RJ12X4

ZL-CDM-RJ12X10

Specifications								
Communication Distribution Modules	Part #	Pcs/ Pkg	Price/Pkg	Weight (lbs)	Part #	Pcs/ Pkg	Price/Pkg	Weight (lbs)
	ZL-CDM-RJ12X4	1	$31.50	0.14	ZL-CDM-RJ12X10	1	$39.50	0.23
Description 2	4-port RJ12 Communication Distribution Module				10-port RJ12 Communication Distribution Module			
Voltage Rating 3	30VDC							
Maximum Current per Circuit	1A							
Number of Circuits per RJ12	6							
Terminal Block Contacts	Copper alloy, tin-lead plated							
Wire Range (Rated Cross Section) 1	12–24 AWG Solid or Stranded Copper Conductor (2.5 mm²)							
Wire Strip Length	0.24–0.27 in (6–7 mm)							
Screw Torque	4.4 in·lbs (0.5 N·m)							
Connecting Cables (Sold Separately)	ZL-RJ12-CBL-2, ZL-RJ12-CBL-2P, GS-RJ12-CBL-2, SVC-232RJ12-CBL-2 Click on link: Connection Cable Specifications Tables.							
Surrounding Temperature Range	32 to 140°F (0 to 60°C)							
Cable/Wire Clearances	0.5 in (12.7 mm) Required							
Mounting Restrictions	None							
Approvals	File # E200031 UL, cUL, Class 1, Division 2, Groups A,B,C,D Hazardous Locations, CE, EN 61131-2:2007							

1 Use conductors rated for 60°/75°C.
2 Connecting cables are for internal wiring only.
3 Use Class 2 power supply.

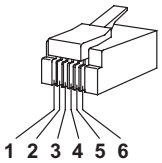

RJ12 Plug Pin Layout
(For Reference Only)

ZL-CDM-RJ12n Typical Internal Circuit

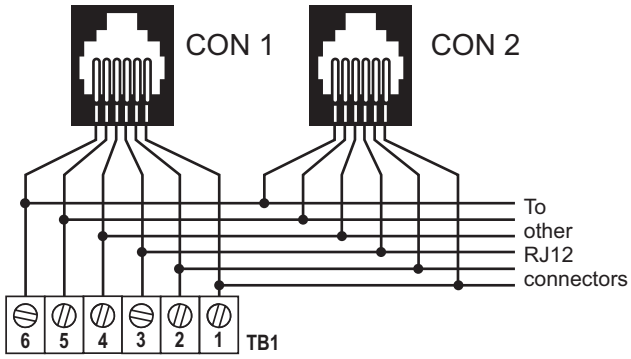

Note: See wiring details and dimensional drawings on our Web site at: http://www.automationdirect.com/static/manuals/ziplinks/ziplinks.html.

Accessories

Replacement Relays

Replacement relays are offered with a 24VDC coil or 120VAC coil and are for use with the ***ZIP***Link relay modules.

Sold in packages of 4.

ZL-RELAY-24X4
$23.00

ZL-RELAY-120X4
$31.50

24VDC Relay Specifications			
Contact		***Coil***	
Current Rating	30VDC @ 10A 250VAC @ 8A General Use	***Input Voltage Range***	24VDC (-20%/+30%)
		Maximum Continuous Coil Voltage	31.2 VDC
Contact Type	1 Form C (SPDT)	***Rated Current per Coil***	16.7 mA (±10%) @ 24VDC
Contact Voltage (per point)	250VAC/30VDC	***Coil Resistance***	1440Ω (±10%)
Maximum Power Inductive	2000VA General Use	***Power Consumption per Coil***	0.4 W
Maximum Power Resistive	AC 2000VA, DC 300W	***Pick Up Current Max. per Coil***	15mA
Maximum Switching Voltage	250VAC, 110VDC	***Drop-Out Voltage Min.***	1.2 VDC
Minimum Load	10mA @ 5VDC	***Pick-Up Voltage Max.***	19.2 VDC
Contact Resistance	100mΩ Max @ 1A, 6VDC	***Off to On/On to Off Response Time***	12ms/8ms
Contact Material	AgNi (Silver Nickel Alloy)	***Weight (lbs)***	0.11
120VAC Relay Specifications			
Contact		***Coil***	
Current Rating	30VDC @ 10A 250VAC @ 8A General Use	***Input Voltage Range***	115VAC (-20%/+30%), 50–60Hz
Contact Type	1 Form C (SPDT)	***Maximum Continuous Coil Voltage***	150VAC
Contact Voltage (per point)	250VAC/30VDC	***Rated Current per Coil***	7.65 mA (±10%) @ 115VAC 50Hz 6.30 mA (±10%) @ 115VAC 60Hz
Maximum Power Inductive	2000VA General Use	***Coil Resistance***	8100Ω (±10%)
Maximum Power Resistive	AC 2000VA, DC 300W	***Power Consumption per Coil***	0.88 W @ 50Hz 0.73 W @ 60Hz
Maximum Switching Voltage	250VAC, 110VDC	***Drop-Out Voltage Min.***	34.5 VAC
Minimum Load	10mA @ 5VDC	***Pick-Up Voltage Max.***	92VAC
Contact Resistance	100mΩ Max @ 1A, 6VDC	***Off to On / On to Off Response Time***	12ms/8ms
Contact Material	AgNi (Silver Nickel Alloy)	***Weight (lbs)***	0.11

Installation Accessories

Accessories			
	Part #	***Pcs/Pkg***	***Price/Pkg***
DIN Rail	DN-R35S1	10	$39.00
Angled Support Bracket	DN-ASB1	50	$107.00
End Bracket	DN-EB35	50	$74.00

Accessories

Replacement Relays

Replacement 24VDC relays are offered for use with the ***ZIP***Link relay modules ZL-RRL16F-24-1/-2.

Sold in packages of 4.

ZL-RELAY-F24X4
$26.00

ZL-RELAY-F24x4 24VDC Relay Specifications			
Contact		***Coil***	
Current Rating	30VDC @ 8A 250VAC @ 8A General Use	***Input Voltage Range***	24VDC (-20%/+30%)
		Maximum Continuous Coil Voltage	31.2 VDC
Contact Type	1 Form C (SPDT)	***Rated Current per Coil***	16.7 mA (±10%) @ 24VDC
Contact Voltage (per point)	250VAC / 30VDC	***Coil Resistance***	1440Ω (±10%)
Maximum Power Inductive	2000VA General Use	***Power Consumption per Coil***	0.4 W
Maximum Power Resistive	AC 2000VA, DC 240W	***Pick Up Current Max. per Coil***	15mA
Maximum Switching Voltage	250VAC, 300VDC	***Drop-Out Voltage Min.***	1.2 VDC
Minimum Load	10mA @ 5VDC	***Pick-Up Voltage Max.***	19.2 VDC
Contact Resistance	100mΩ Max @ 1A, 6VDC	***Off to On/On to Off Response Time***	12ms/8ms
Contact Material	AgNi (Silver Nickel Alloy)	***Weight (lbs)***	0.11

Module Dimensions

ZL-RTB20

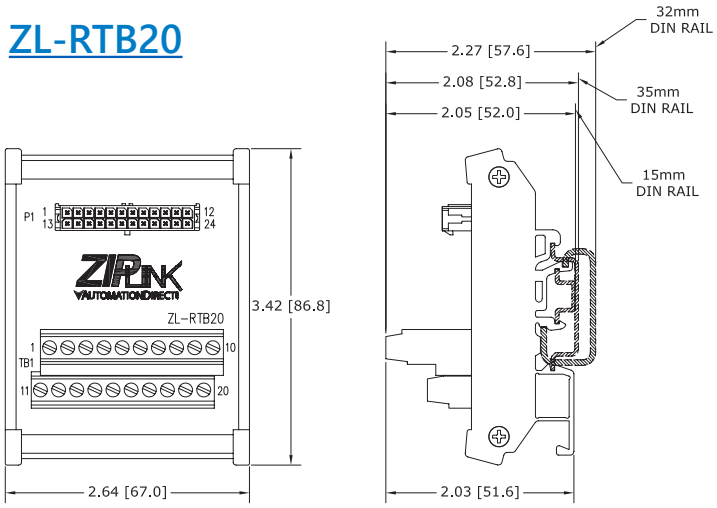

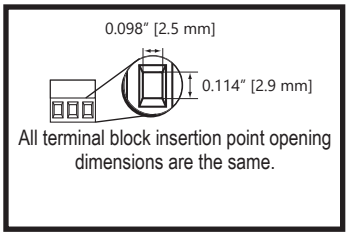

ZL-RTB40

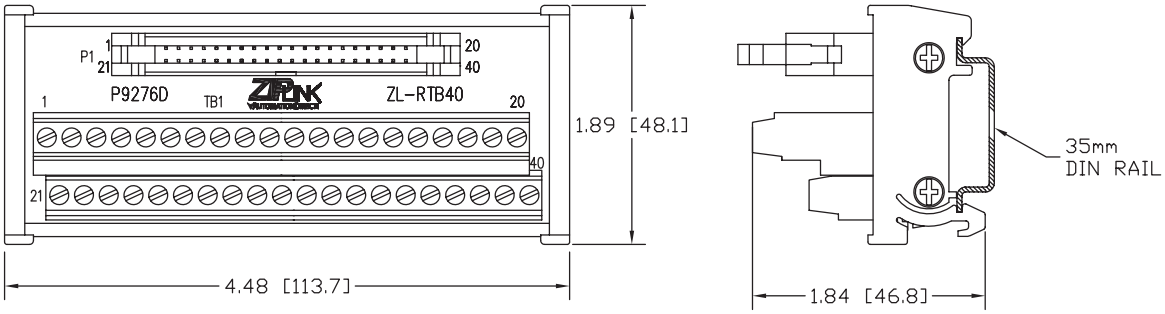

ZL-RTB50

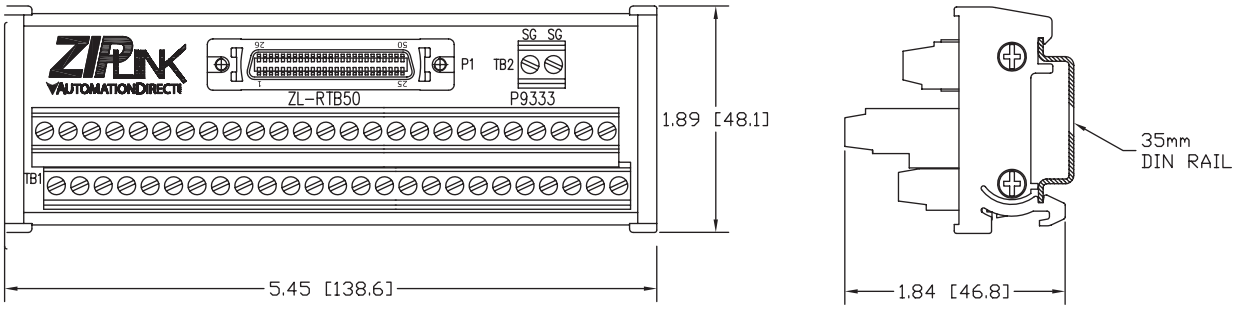

Note: Dimensions shown in Inches [mm]

Module Dimensions

ZL-RTB20-1

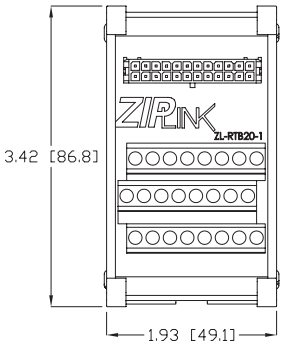

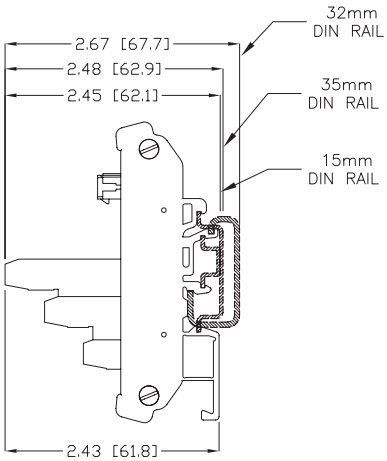

ZL-RTB40-1

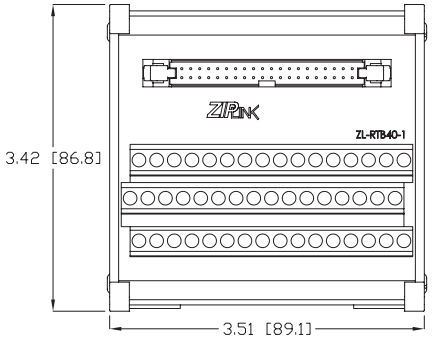

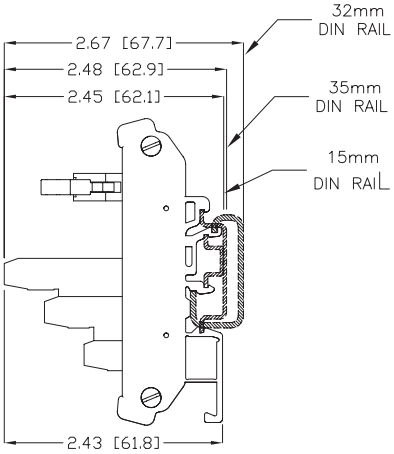

ZL-RTB-COM

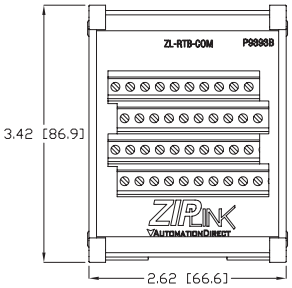

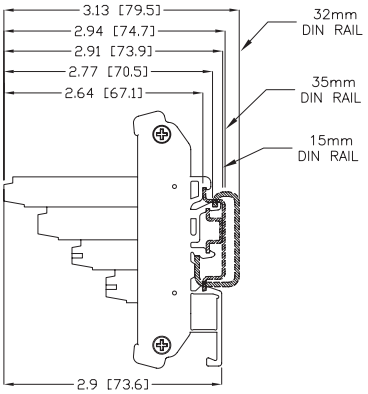

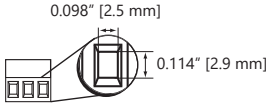

All terminal block insertion point opening dimensions are the same.

Module Dimensions

ZL-RFU20

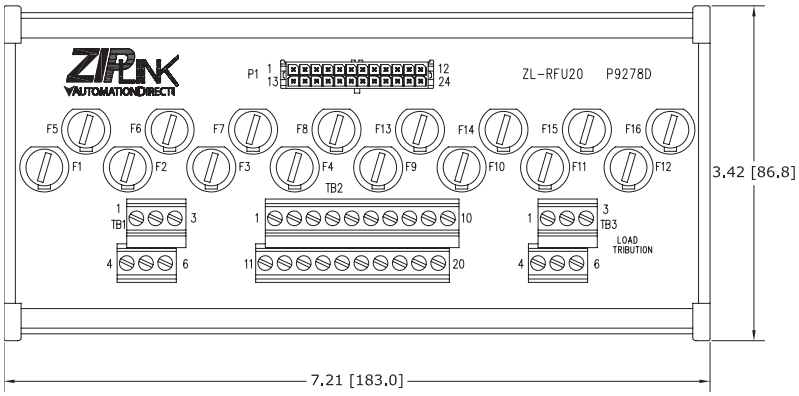

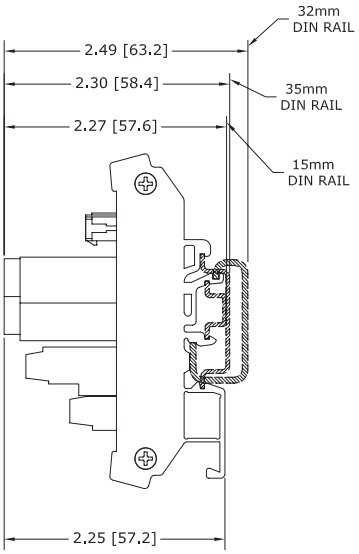

ZL-RFU40

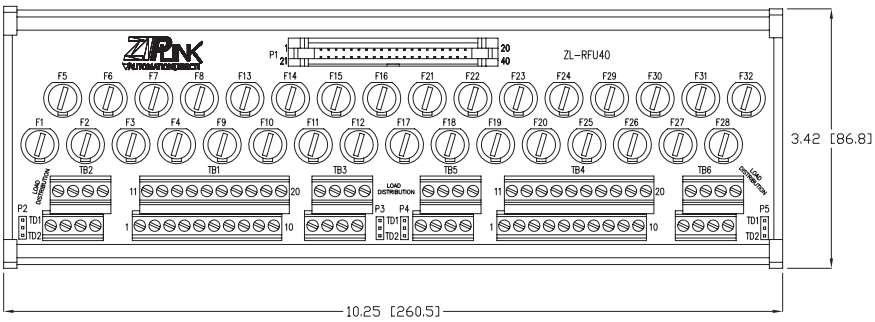

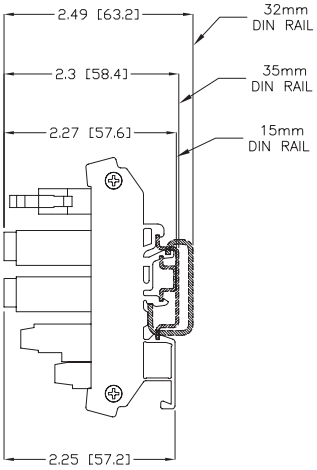

ZL-FUSE-16

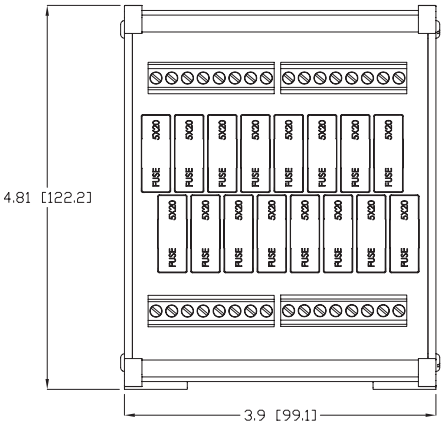

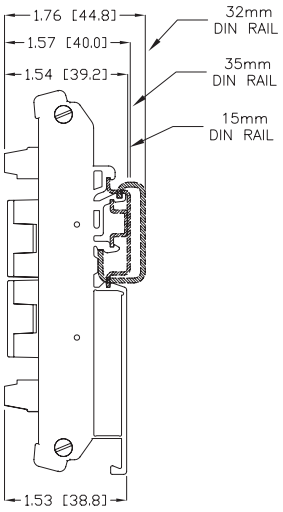

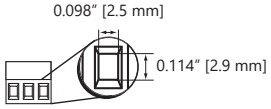

All terminal block insertion point opening dimensions are the same.

Note: Dimensions shown in Inches [mm]

Module Dimensions

ZL-RRL16-24-1
ZL-RRL16-24-2

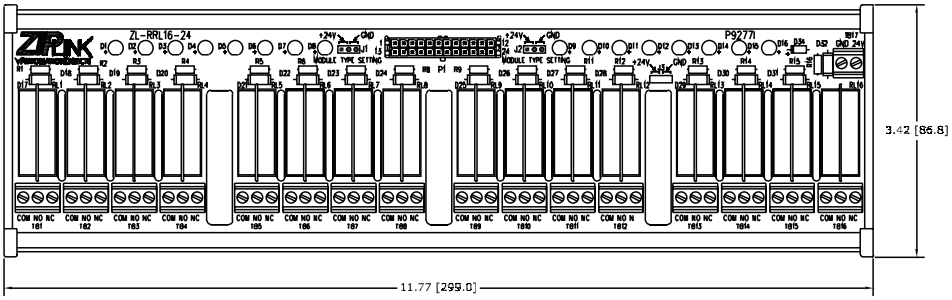

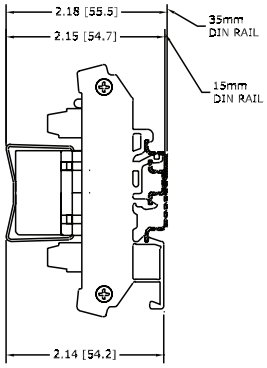

ZL-RLS1-24
ZL-RLS1-120

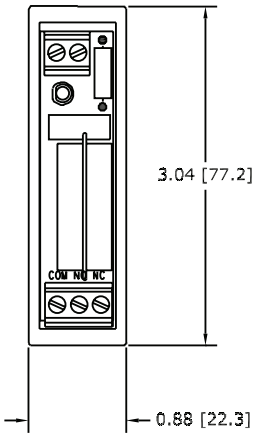

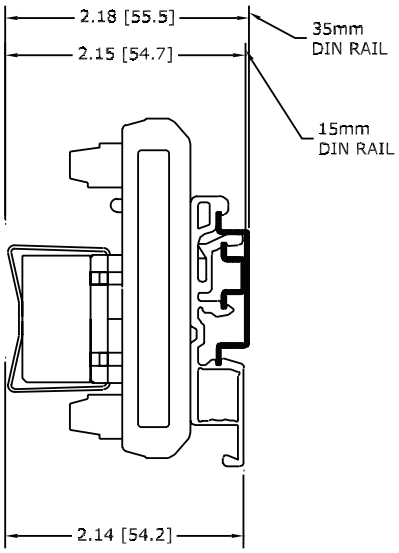

ZL-RLS1-24
ZL-RLS4-120

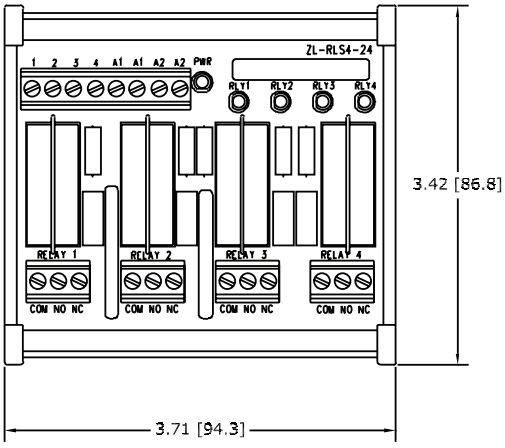

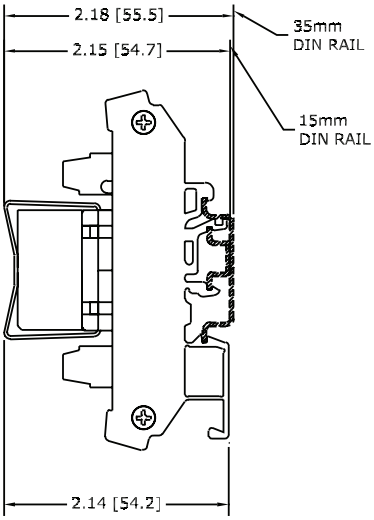

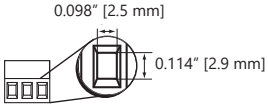

All terminal block insertion point opening dimensions are the same.

Note: Dimensions shown in Inches [mm]

Module Dimensions

ZL-RRL16F-24-1
ZL-RRL16F-24-2

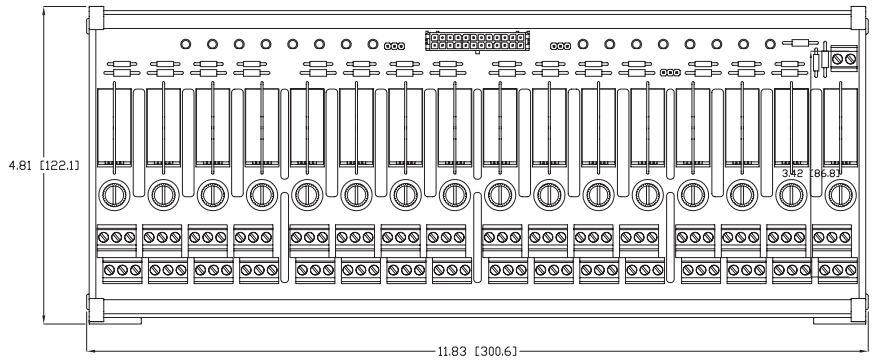

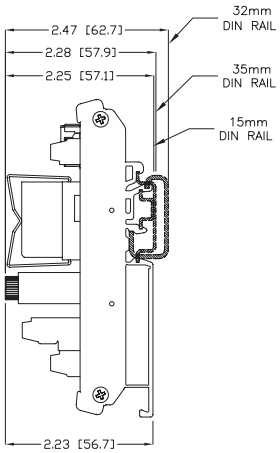

ZL-RRL16W-24-1
ZL-RRL16W-24-2

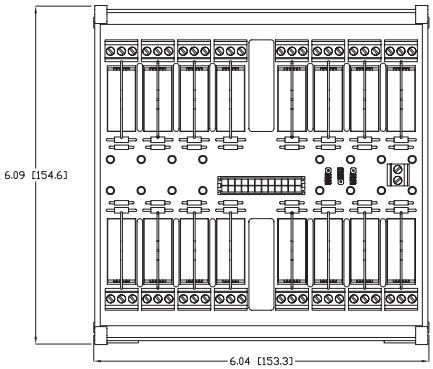

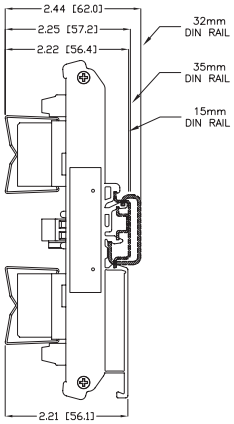

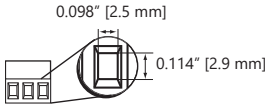

All terminal block insertion point opening dimensions are the same.

Note: Dimensions shown in Inches [mm]

Module Dimensions

ZL-LTB16-24-1

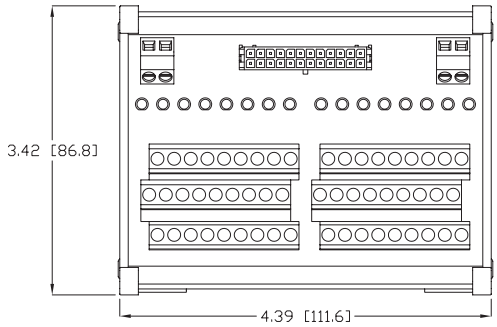

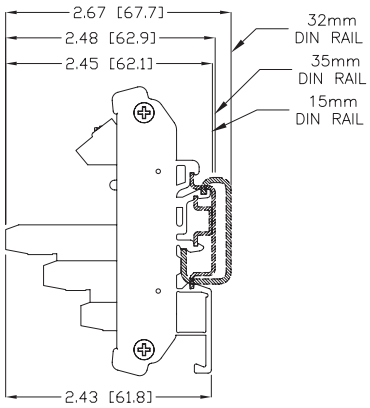

ZL-LTB32-24-1

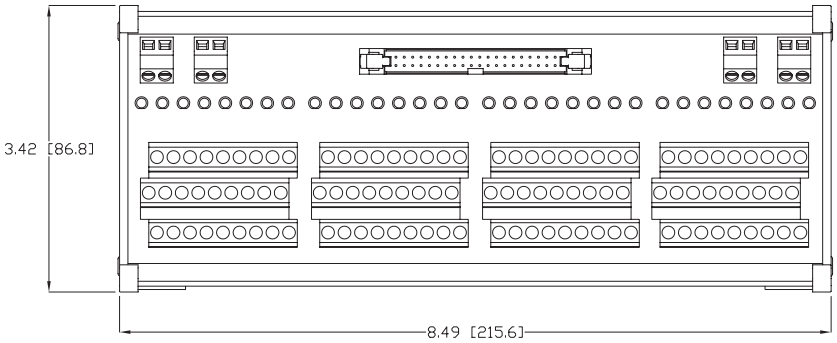

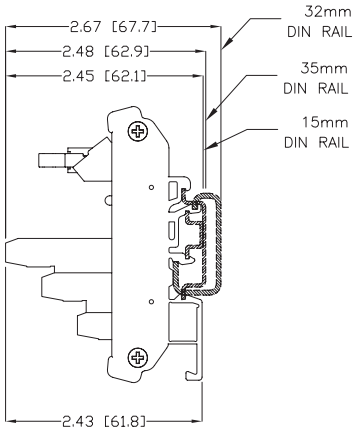

ZL-TSD8-24
ZL-TSD8-120

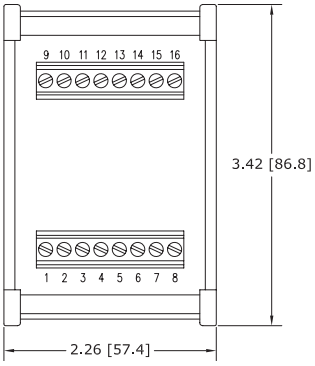

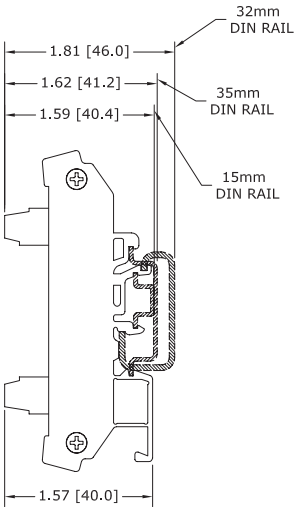

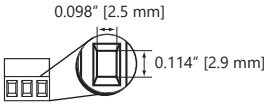

All terminal block insertion point opening dimensions are the same.

Note: Dimensions shown in Inches [mm]

Module Dimensions

ZL-RTB-DB09/15/25

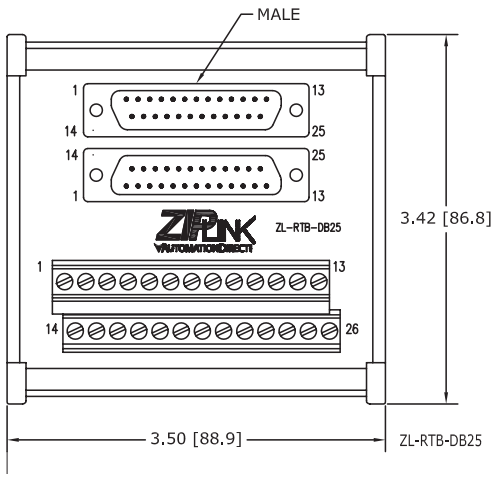

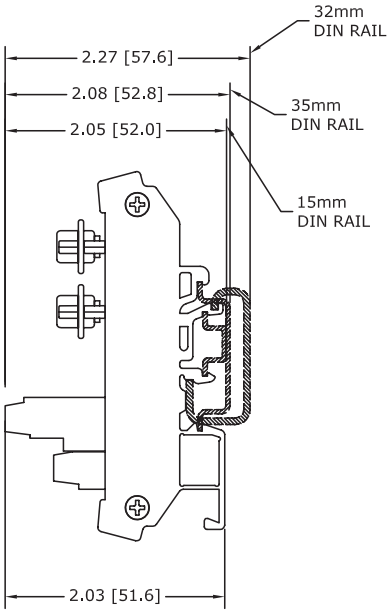

ZL-RTB-RJ12

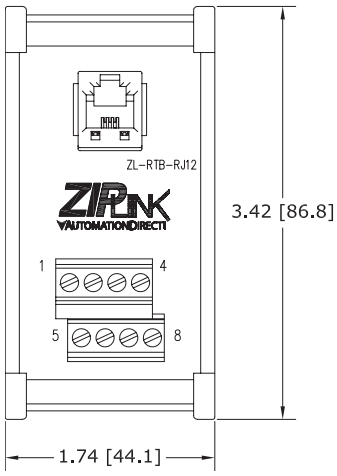

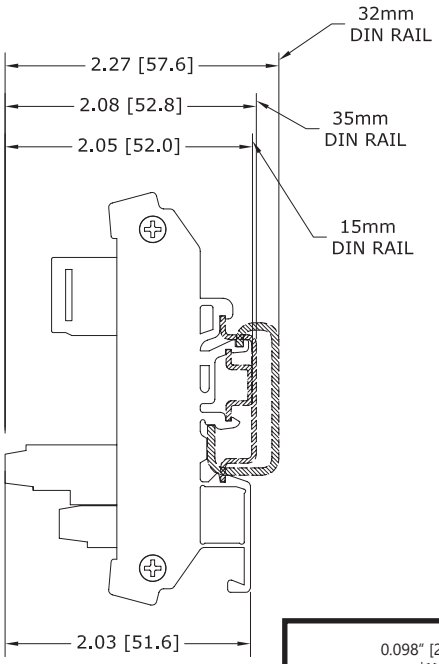

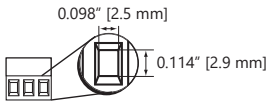

All terminal block insertion point opening dimensions are the same.

Note: Dimensions shown in Inches [mm]

Module Dimensions

ZL-CDM-RJ12X4

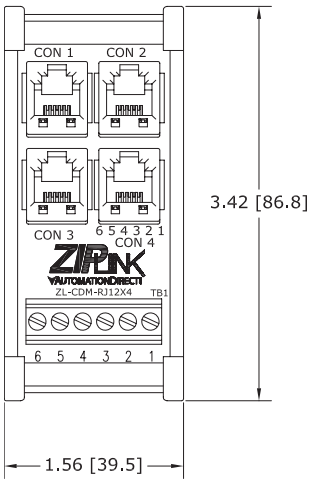

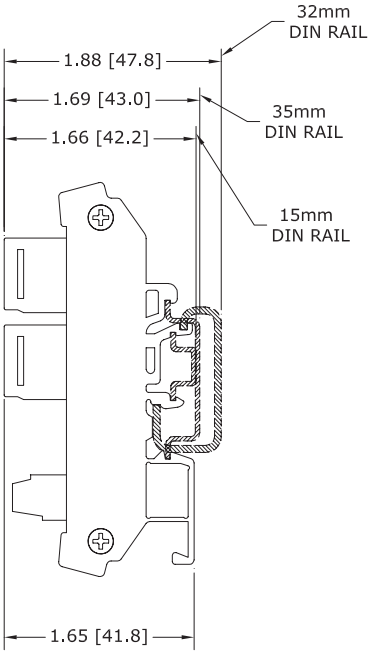

ZL-CDM-RJ12X10

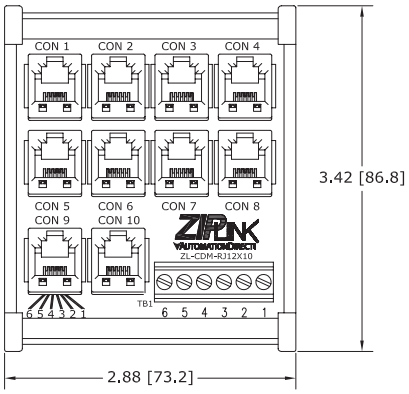

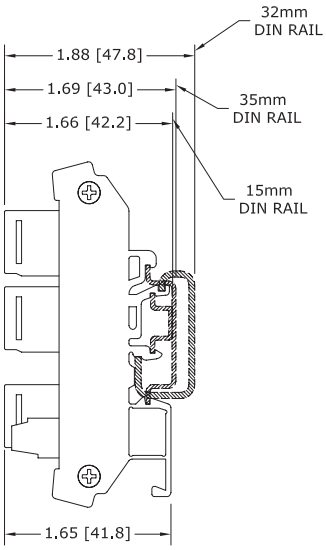

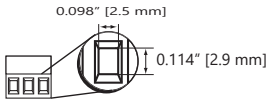

All terminal block insertion point opening dimensions are the same.

Note: Dimensions shown in Inches [mm]

Module Dimensions

ZL-RTB-RJ45

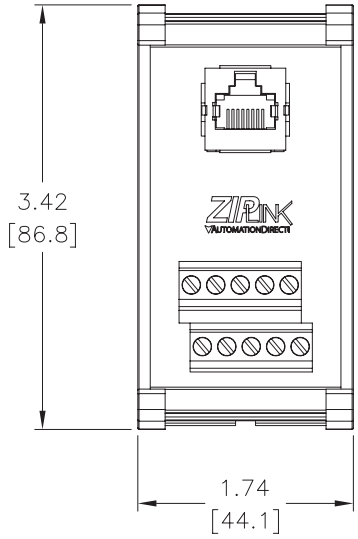

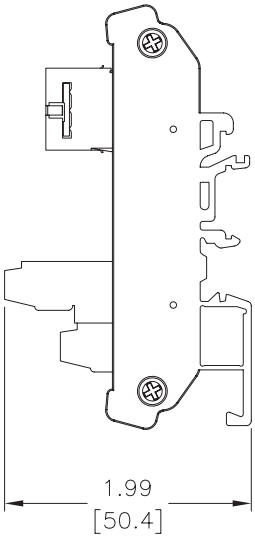

Note: Dimensions shown in Inches [mm]

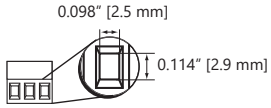

All terminal block insertion point opening dimensions are the same.

Connection Cables

*ZIP*Link Connection Cables				
Part Number	**Description**	**Insulation Rating**	**Weight (lbs)**	**Price**
	BRX ZIPLink Cables			
ZL-BX-CBL15	*ZIP*Link PLC I/O cable, 15-position terminal block to 24-pin connector, 1.6ft/0.5m cable length. For use with BRX 18-point and 36-point PLCs.	300V, 80˚C	0.3	$40.00
ZL-BX-CBL15-1	*ZIP*Link PLC I/O cable, 15-position terminal block to 24-pin connector, 3.2ft/1m cable length. For use with BRX 18-point and 36-point PLCs.	300V, 80˚C	0.4	$46.00
ZL-BX-CBL15-2	*ZIP*Link PLC I/O cable, 15-position terminal block to 24-pin connector, 6.5ft/2m cable length. For use with BRX 18-point and 36-point PLCs.	300V, 80˚C	0.7	$40.00
ZL-BX-CBL15-1P	*ZIP*Link PLC I/O cable, 15-position terminal block to pigtail, 3.2ft/1m cable length. For use with BRX 18-point and 36-point PLCs.	300V, 80˚C	0.4	$31.50
ZL-BX-CBL15-2P	*ZIP*Link PLC I/O cable, 15-position terminal block to pigtail, 6.5ft/2m cable length. For use with BRX 18-point and 36-point PLCs.	300V, 80˚C	0.6	$36.00
ZL-BX-CBL20	*ZIP*Link PLC I/O cable, 20-position terminal block to 24-pin connector, 1.6ft/0.5m cable length. For use with BRX 10-point PLCs.	300V, 80˚C	0.3	$30.00
ZL-BX-CBL20-1	*ZIP*Link PLC I/O cable, 20-position terminal block to 24-pin connector, 3.2ft/1m cable length. For use with BRX 10-point PLCs.	300V, 80˚C	0.5	$29.50
ZL-BX-CBL20-2	*ZIP*Link PLC I/O cable, 20-position terminal block to 24-pin connector, 6.5ft/2m cable length. For use with BRX 10-point PLCs.	300V, 80˚C	0.7	$36.00
ZL-BX-CBL20-1P	*ZIP*Link PLC I/O cable, 20-position terminal block to pigtail, 3.2ft/1m cable length. For use with BRX 10-point PLCs.	300V, 80˚C	0.4	$25.50
ZL-BX-CBL20-2P	*ZIP*Link PLC I/O cable, 20-position terminal block to pigtail, 6.5ft/2m cable length. For use with BRX 10-point PLCs.	300V, 80˚C	0.7	$33.50
ZL-BX-CBL40-S	*ZIP*Link PLC I/O cable, 40-pin connector to 40-pin connector, shielded, 1.6ft/0.5m cable length. For use with BRX series high-speed modules.	300V, 80˚C	0.5	$45.50
ZL-BX-CBL40-1S	*ZIP*Link PLC I/O cable, 40-pin connector to 40-pin connector, shielded, 3.2ft/1m cable length. For use with BRX series high-speed modules.	300V, 80˚C	0.7	$56.00
ZL-BXEM-CBL10	*ZIP*Link PLC I/O cable, 10-position terminal block to 24-pin connector, 1.6ft/0.5m cable length. For use with BRX 8-point expansion modules.	300V, 80˚C	0.3	$25.50
ZL-BXEM-CBL10-1	*ZIP*Link PLC I/O cable, 10-position terminal block to 24-pin connector, 3.2ft/1m cable length. For use with BRX 8-point expansion modules.	300V, 80˚C	0.4	$25.50
ZL-BXEM-CBL10-2	*ZIP*Link PLC I/O cable, 10-position terminal block to 24-pin connector, 6.5ft/2m cable length. For use with BRX 8-point expansion modules.	300V, 80˚C	0.7	$28.50
ZL-BXEM-CBL10-1P	*ZIP*Link PLC I/O cable, 10-position terminal block to pigtail, 3.2ft/1m cable length. For use with BRX 8-point expansion modules.	300V, 80˚C	0.4	$24.50
ZL-BXEM-CBL10-2P	*ZIP*Link PLC I/O cable, 10-position terminal block to pigtail, 6.5ft/2m cable length. For use with BRX 8-point expansion modules.	300V, 80˚C	0.6	$38.00
ZL-BXEM-CBL15	*ZIP*Link PLC I/O cable, 15-position terminal block to 24-pin connector, 1.6ft/0.5m cable length. For use with BRX 5-point and 12-point expansion modules.	300V, 80˚C	0.3	$24.50
ZL-BXEM-CBL15-1	*ZIP*Link PLC I/O cable, 15-position terminal block to 24-pin connector, 3.2ft/1m cable length. For use with BRX 5-point and 12-point expansion modules.	300V, 80˚C	0.5	$27.50
ZL-BXEM-CBL15-2	*ZIP*Link PLC I/O cable, 15-position terminal block to 24-pin connector, 6.5ft/2m cable length. For use with BRX 5-point and 12-point expansion modules.	300V, 80˚C	0.7	$31.50
ZL-BXEM-CBL15-1P	*ZIP*Link PLC I/O cable, 15-position terminal block to pigtail, 3.2ft/1m cable length. For use with BRX 5-point and 12-point expansion modules.	300V, 80˚C	0.4	$24.00
ZL-BXEM-CBL15-2P	*ZIP*Link PLC I/O cable, 15-position terminal block to pigtail, 6.5ft/2m cable length. For use with BRX 5-point and 12-point expansion modules.	300V, 80˚C	0.7	$27.00
ZL-BXEM-CBL20	*ZIP*Link PLC I/O cable, 20-position terminal block to 24-pin connector, 1.6ft/0.5m cable length. For use with BRX 16-point expansion modules.	300V, 80˚C	0.3	$39.50
ZL-BXEM-CBL20-1	*ZIP*Link PLC I/O cable, 20-position terminal block to 24-pin connector, 3.2ft/1m cable length. For use with BRX 16-point expansion modules.	300V, 80˚C	0.5	$40.00
ZL-BXEM-CBL20-2	*ZIP*Link PLC I/O cable, 20-position terminal block to 24-pin connector, 6.5ft/2m cable length. For use with BRX 16-point expansion modules.	300V, 80˚C	0.7	$47.00
ZL-BXEM-CBL20-1P	*ZIP*Link PLC I/O cable, 20-position terminal block to pigtail, 3.2ft/1m cable length. For use with BRX 16-point expansion modules.	300V, 80˚C	0.4	$43.00
ZL-BXEM-CBL20-2P	*ZIP*Link PLC I/O cable, 20-position terminal block to pigtail, 6.5ft/2m cable length. For use with BRX 16-point expansion modules.	300V, 80˚C	0.7	$51.00

ZL-BX-CBL15

ZL-BX-CBL20-1P

ZL-BXEM-CBL20

ZL-BXEM-CBL20-1P

Connection Cables (cont.)

*ZIP*Link Connection Cables				
Part Number	***Description***	***Insulation Rating***	***Weight (lbs)***	***Price***
BRX ZIPLink Cables, continued				
ZL-D24-CBL40	Cable w/180° plug for module with 40-pin connector to 40-pin connector, 24 AWG, 1.6 ft. (0.5 m)	300V, 80˚C	0.36	$48.50
ZL-D24-CBL40-1	Cable w/180° plug for module with 40-pin connector to 40-pin connector, 24 AWG, 3.3 ft. (1.0 m)	300V, 80˚C	0.56	$62.00
ZL-D24-CBL40-2	Cable w/180° plug for module with 40-pin connector to 40-pin connector, 24 AWG, 6.6 ft. (2.0 m)	300V, 80˚C	0.61	$73.00
ZL-D24-CBL40-X	Cable w/45° plug for module with 40-pin connector to 40-pin connector, 24 AWG, 1.6 ft. (0.5 m)	300V, 80˚C	0.36	$73.00
ZL-D24-CBL40-1X	Cable w/45° plug for module with 40-pin connector to 40-pin connector, 24 AWG 3.3 ft. (1.0 m)	300V, 80˚C	0.56	$84.00
ZL-D24-CBL40-1P	Cable w/180° plug for module with 40-pin connector to 40-wire pigtail, 24 AWG, 3.3 ft. (1.0 m)	300V, 80˚C	0.56	$52.00
ZL-D24-CBL40-2P	Cable w/180° plug for module with 40-pin connector to 40-wire pigtail, 24 AWG, 6.6 ft. (2.0 m)	300V, 80˚C	0.61	$70.00
ZL-D24-CBL40-2XP	Cable w/45° plug for module with 40-pin connector to 40-wire pigtail, 24 AWG, 6.6 ft. (2.0 m)	300V, 80˚C	0.61	$95.00

ZL-D24-CBL40

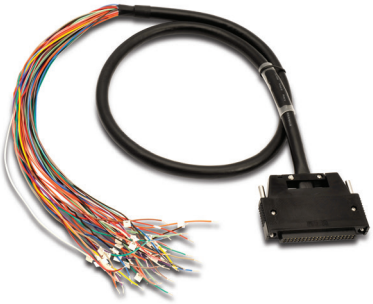

ZL-D24-CBL40-1P

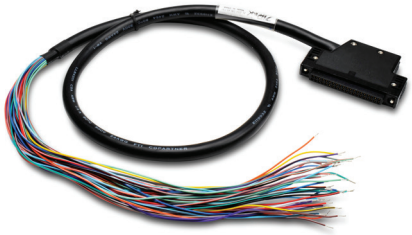

ZL-D24-CBL40-1XP

Connection Cables (cont.)

*ZIP*Link Connection Cables				
Part Number	***Description***	***Insulation Rating***	***Weight (lbs)***	***Price***
CLICK ZIPLink Cables				
ZL-C0-CBL11	Cable for module with 11 terminals to 24-pin connector, 24 AWG, 1.6 ft. (0.5 m)	300V, 80˚C	0.21	$34.00
ZL-C0-CBL11-1	Cable for module with 11 terminals to 24-pin connector, 24 AWG, 3.3 ft. (1.0 m)	300V, 80˚C	0.31	$37.50
ZL-C0-CBL11-2	Cable for module with 11 terminals to 24-pin connector, 24 AWG, 6.6 ft. (2.0 m)	300V, 80˚C	0.56	$43.50
ZL-C0-CBL11-1P	Cable for module with 11 terminals to pigtail, 24 AWG, 3.3 ft. (1.0 m)	300V, 80˚C	0.21	$34.00
ZL-C0-CBL11-2P	Cable for module with 11 terminals to pigtail, 24 AWG, 6.6 ft. (2.0 m)	300V, 80˚C	0.26	$41.00
ZL-C0-CBL20	Cable for module with 20 terminals to 24-pin connector, 24 AWG, 1.6 ft. (0.5 m)	300V, 80˚C	0.25	$37.50
ZL-C0-CBL20-1	Cable for module with 20 terminals to 24-pin connector, 24 AWG, 3.3 ft. (1.0 m)	300V, 80˚C	0.31	$41.50
ZL-C0-CBL20-2	Cable for module with 20 terminals to 24-pin connector, 24 AWG, 6.6 ft. (2.0 m)	300V, 80˚C	0.61	$50.00
ZL-C0-CBL20-1P	Cable for module with 20 terminals to pigtail, 24 AWG, 3.3 ft. (1.0 m)	300V, 80˚C	0.21	$37.50
ZL-C0-CBL20-2P	Cable for module with 20 terminals to pigtail, 24 AWG, 6.6 ft. (2.0 m)	300V, 80˚C	0.26	$47.00
DL05 and DL06 ZIPLink Cables				
ZL-D0-CBL13	Cable for module with 13 terminals to 24-pin connector, 24 AWG, 1.6 ft. (0.5 m)	300V, 80˚C	0.26	$26.50
ZL-D0-CBL24	Cable for module with 24-pin connector to 24-pin connector, 24 AWG, 1.6 ft. (0.5 m)	300V, 80˚C	0.26	$34.50
ZL-D0-CBL24-1	Cable for module with 24-pin connector to 24-pin connector, 24 AWG, 3.3 ft. (1.0 m)	300V, 80˚C	0.36	$34.00
ZL-D0-CBL24-2	Cable for module with 24-pin connector to 24-pin connector, 24 AWG, 6.6 ft. (2.0 m)	300V, 80˚C	0.56	$43.00
ZL-D0-CBL24-L	Cable for module with 24-pin connector to 24-pin connector for LED module, 24 AWG, 1.6 ft. (0.5 m)	300V, 80˚C	0.26	$32.00
ZL-D0-CBL24-1L	Cable for module with 24-pin connector to 24-pin connector for LED module, 24 AWG, 3.3 ft. (1.0 m)	300V, 80˚C	0.36	$34.00
ZL-D0-CBL24-2L	Cable for module with 24-pin connector to 24-pin connector for LED module, 24 AWG, 6.6 ft. (2.0 m)	300V, 80˚C	0.56	$43.00
ZL-D0-CBL24-1P	Cable for module with 24-pin connector to 24-wire pigtail, 24 AWG, 3.3 ft. (1.0 m)	300V, 80˚C	0.26	$29.00
ZL-D0-CBL24-2P	Cable for module with 24-pin connector to 24-wire pigtail, 24 AWG, 6.6 ft. (2.0 m)	300V, 80˚C	0.56	$36.00
ZL-D06X-CBL20	Cable used to connect DirectLOGIC 06 PLC fixed inputs with 20 terminals to the ZL-RTB20 ***ZIP***Link module with a 24-pin connector, can be used on the input side terminal block only, 24 AWG, 1.6 ft. (0.5 m)	300V, 80˚C	0.36	$64.00
ZL-D06Y-CBL20	Cable used to connect DirectLOGIC 06 PLC fixed outputs with 20 terminals to the ZL-RTB20 ***ZIP***Link module with a 24-pin connector, can be used on the output side terminal block only, 24 AWG, 1.6 ft. (0.5 m)	300V, 80˚C	0.36	$53.00

ZL-C0-CBL11

ZL-D0-CBL24-1

ZL-D0-CBL24-1P

Connection Cables (cont.)

*ZIP*Link Connection Cables				
Part Number	***Description***	***Insulation Rating***	***Weight (lbs)***	***Price***
Do-more / DL205 ZIPLink Cables				
ZL-D2-CBL10	Cable for module with 10 terminals to 24-pin connector, 24 AWG, 1.6 ft. (0.5 m)	300V, 80˚C	0.36	$36.50
ZL-D2-CBL10-1	Cable for module with 10 terminals to 24-pin connector, 24 AWG, 3.3 ft. (1.0 m)	300V, 80˚C	0.61	$41.00
ZL-D2-CBL10-2	Cable for module with 10 terminals to 24-pin connector, 24 AWG, 6.6 ft. (2.0 m)	300V, 80˚C	0.61	$50.00
ZL-D2-CBL10-2P	Cable for module with 10 terminals to pigtail, 24 AWG, 6.6 ft (2.0 m)	300V, 80˚C	0.46	$42.50
ZL-D2-CBL19	Cable for module with 19 terminals to 24-pin connector, 24 AWG, 1.6 ft. (0.5 m)	300V, 80˚C	0.36	$66.00
ZL-D2-CBL19-1	Cable for module with 19 terminals to 24-pin connector, 24 AWG, 3.3 ft. (1.0 m)	300V, 80˚C	0.61	$70.00
ZL-D2-CBL19-2	Cable for module with 19 terminals to 24-pin connector, 24 AWG, 6.6 ft. (2.0 m)	300V, 80˚C	0.61	$76.00
ZL-D2-CBL19-1P	Cable for module with 19 terminals to pigtail, 24 AWG, 3.3 ft (1.0 m)	300V, 80˚C	0.61	$59.00
ZL-D2-CBL19-2P	Cable for module with 19 terminals to pigtail, 24 AWG, 6.6 ft (2.0 m)	300V, 80˚C	0.61	$69.00
ZL-D24-CBL40	Cable w/180° plug for module with 40-pin connector to 40-pin connector, 24 AWG, 1.6 ft (0.5 m)	300V, 80˚C	0.36	$48.50
ZL-D24-CBL40-1	Cable w/180° plug for module with 40-pin connector to 40-pin connector, 24 AWG, 3.3 ft. (1.0 m)	300V, 80˚C	0.61	$62.00
ZL-D24-CBL40-2	Cable w/180° plug for module with 40-pin connector to 40-pin connector, 24 AWG, 6.6 ft. (2.0 m)	300V, 80˚C	0.61	$73.00
ZL-D24-CBL40-X	Cable w/45° plug for module with 40-pin connector to 40-pin connector, 24 AWG, 1.6 ft. (0.5 m)	300V, 80˚C	0.36	$73.00
ZL-D24-CBL40-1X	Cable w/45° plug for module with 40-pin connector to 40-pin connector, 24 AWG, 3.3 ft. (1.0 m)	300V, 80˚C	0.61	$84.00
ZL-D24-CBL40-1P	Cable w/180° plug for module with 40-pin connector to 40-wire pigtail, 24 AWG, 3.3 ft. (1.0 m)	300V, 80˚C	0.56	$52.00
ZL-D24-CBL40-2P	Cable w/180° plug for module with 40-pin connector to 40-wire pigtail, 24 AWG, 6.6 ft. (2.0 m)	300V, 80˚C	0.61	$70.00
ZL-D24-CBL40-2XP	Cable w/45° plug for module with 40-pin connector to 40-wire pigtail, 24 AWG, 6.6 ft. (2.0 m)	300V, 80˚C	0.61	$95.00
ZL-D24-CON	***ZIP***Link solder-style connector, 180°, 40-pin, qty. 2	N/A	0.36	$51.00
ZL-D24-CON-X	***ZIP***Link solder-style connector, 105°, 40-pin, qty. 2	N/A	0.36	$96.00

ZL-D06X-CBL20

ZL-D2-CBL10

ZL-D24-CBL40

ZL-D2-CBL19-1P

Connection Cables (cont.)

*ZIP*Link Connection Cables				
Part Number	***Description***	***Insulation Rating***	***Weight (lbs)***	***Price***
DL405 ZIPLink Cables				
ZL-D24-CBL40	Cable w/180° plug for module with 40-pin connector to 40-pin connector, 24 AWG, 1.6 ft. (0.5 m)	300V, 80˚C	0.36	$48.50
ZL-D24-CBL40-1	Cable w/180° plug for module with 40-pin connector to 40-pin connector, 24 AWG, 3.3 ft. (1.0 m)	300V, 80˚C	0.56	$62.00
ZL-D24-CBL40-2	Cable w/180° plug for module with 40-pin connector to 40-pin connector, 24 AWG, 6.6 ft. (2.0 m)	300V, 80˚C	0.61	$73.00
ZL-D24-CBL40-X	Cable w/45° plug for module with 40-pin connector to 40-pin connector, 24 AWG, 1.6 ft. (0.5 m)	300V, 80˚C	0.36	$73.00
ZL-D24-CBL40-1X	Cable w/45° plug for module with 40-pin connector to 40-pin connector, 24 AWG 3.3 ft. (1.0 m)	300V, 80˚C	0.56	$84.00
ZL-D24-CBL40-1P	Cable w/180° plug for module with 40-pin connector to 40-wire pigtail, 24 AWG, 3.3 ft. (1.0 m)	300V, 80˚C	0.56	$52.00
ZL-D24-CBL40-2P	Cable w/180° plug for module with 40-pin connector to 40-wire pigtail, 24 AWG, 6.6 ft. (2.0 m)	300V, 80˚C	0.61	$70.00
ZL-D24-CBL40-2XP	Cable w/45° plug for module with 40-pin connector to 40-wire pigtail, 24 AWG, 6.6 ft. (2.0 m)	300V, 80˚C	0.61	$95.00
ZL-D24-CON	***ZIP***Link solder-style connector, 180°, 40-pin, qty. 2	N/A	0.36	$51.00
ZL-D24-CON-X	***ZIP***Link solder-style connector, 45°, 40-pin, qty. 2	N./A	0.36	$96.00

ZL-D24-CBL40-1P

ZL-D24-CBL40-1XP

ZL-D24-CON Parts

Connection Cables (cont.)

*ZIP*Link Connection Cables				
Part Number	***Description***	***Insulation Rating***	***Weight (lbs)***	***Price***
Productivity1000 ZIPLink Cables				
ZL-P1-CBL10	Cable for module with 10 terminals to 24-pin 90-degree connector, 24 AWG, 1.6 ft. (0.5 m)	300V, 80˚C	0.26	$30.00
ZL-P1-CBL10-1	Cable for module with 10 terminals to 24-pin 90-degree connector, 24 AWG, 3.3 ft. (1.0 m)	300V, 80˚C	0.38	$30.00
ZL-P1-CBL10-2	Cable for module with 10 terminals to 24-pin 90-degree connector, 24 AWG, 6.6 ft. (2.0 m)	300V, 80˚C	0.63	$35.00
ZL-P1-CBL10-1P	Cable for module with 10 terminals connector to 20-wire pigtail, 24 AWG, 3.3 ft. (1.0 m)	300V, 80˚C	0.31	$25.00
ZL-P1-CBL10-2P	Cable for module with 10 terminals connector to 20-wire pigtail, 24 AWG, 6.6 ft. (2.0 m)	300V, 80˚C	0.56	$30.50
ZL-P1-CBL18	Cable for module with 18 terminals to 24-pin 90-degree connector, 24 AWG, 1.6 ft. (0.5 m)	300V, 80˚C	0.28	$32.00
ZL-P1-CBL18-1	Cable for module with 18 terminals to 24-pin 90-degree connector, 24 AWG, 3.3 ft. (1.0 m)	300V, 80˚C	0.41	$34.00
ZL-P1-CBL18-2	Cable for module with 18 terminals to 24-pin 90-degree connector, 24 AWG, 6.6 ft. (2.0 m)	300V, 80˚C	0.66	$38.50
ZL-P1-CBL18-1P	Cable for module with 18 terminals connector to 20-wire pigtail, 24 AWG, 3.3 ft. (1.0 m)	300V, 80˚C	0.33	$25.50
ZL-P1-CBL18-2P	Cable for module with 18 terminals connector to 20-wire pigtail, 24 AWG, 6.6 ft. (2.0 m)	300V, 80˚C	0.58	$29.50
Serial Communication ZIPLink Cables				
ZL-RJ12-CBL-2	Crossover cable with 6-pin RJ12 to 6-pin RJ12 connectors, 26 AWG, 6.6 ft. (2.0 m)	150V, 60˚C	0.26	$8.00
ZL-RJ12-CBL-2P	Cable with 6-pin RJ12 connector to 6-wire pigtail, 26 AWG, 6.6 ft. (2.0 m)	150V, 60˚C	0.26	$9.25

ZL-P1-CBL10-1

ZL-P1-CBL10-1P

ZL-RJ12-CBL-2

ZL-RJ12-CBL-2P

ZL-P1-CBL18-1

ZL-P1-CBL18-1P

Connection Cables (cont.)

*ZIP*Link Connection Cables				
Part Number	***Description***	***Insulation Rating***	***Weight (lbs)***	***Price***
Productivity®2000 ZIPLink Cables				
ZL-P2-CBL18	Cable for module with 18 terminals to 24-pin connector, 24 AWG, 1.6 ft. (0.5 m)	300V, 80˚C	0.36	$38.00
ZL-P2-CBL18-1	Cable for module with 18 terminals to 24-pin connector, 24 AWG, 3.3 ft. (1.0 m)	300V, 80˚C	0.36	$42.00
ZL-P2-CBL18-2	Cable for module with 18 terminals to 24-pin connector, 24 AWG, 6.6 ft. (2.0 m)	300V, 80˚C	0.56	$59.00
ZL-P2-CBL18-1P	Cable for module with 18-pin connector to 20-wire pigtail, 24 AWG, 3.3 ft. (1.0 m)	300V, 80˚C	0.56	$36.50
ZL-P2-CBL18-2P	Cable for module with 18-pin connector to 20-wire pigtail, 24 AWG, 6.6 ft. (2.0 m)	300V, 80˚C	0.61	$51.00
ZL-P2-CBL24	Cable for module with 24 terminals to 24-pin connector, 24 AWG, 1.6 ft. (0.5 m)	300V, 80˚C	0.36	$52.00
ZL-P2-CBL24-1	Cable for module with 24 terminals to 24-pin connector, 24 AWG, 3.3 ft. (1.0 m)	300V, 80˚C	0.56	$52.00
ZL-P2-CBL24-2	Cable for module with 24 terminals to 24-pin connector, 24 AWG, 6.6 ft. (2.0 m)	300V, 80˚C	0.61	$51.00
ZL-P2-CBL24-1P	Cable with 24-pin connector to 24-wire pigtail for connecting any 24-pin ***ZIP***Link module to another device, 24 AWG, 3.3 ft. (1.0 m)	300V, 80˚C	0.36	$52.00
ZL-P2-CBL24-2P	Cable with 24-pin connector to 24-wire pigtail for connecting any 24-pin ***ZIP***Link module to another device, 24 AWG, 6.6 ft. (2.0 m)	300V, 80˚C	0.56	$51.00
ZL-P3-CBL40-1P	***ZIP***Link PLC I/O cable, for Productivity Modules, 40-pin connector to pigtail, 24 AWG, 1.0 meter (3.3 ft.) length.	300V, 80˚C	0.56	$43.00
ZL-P3-CBL40-2P	***ZIP***Link PLC I/O cable, for Productivity Modules, 40-pin connector to pigtail, 24 AWG, 2.0 meter (6.6 ft.) length.	300V, 80˚C	0.56	$62.00
ZL-CBL40-S	Cable for module with 40-pin connector to 40-pin connector, shielded, 24 AWG, 1.6 ft. (0.5 m) (High-Speed I/O modules only)	300V, 80˚C	0.4	$43.00
ZL-CBL40-1S	Cable for module with 40-pin connector to 40-pin connector, shielded, 24 AWG, 3.3 ft. (1.0 m) (High-Speed I/O modules only)	300V, 80˚C	0.7	$55.00
ZL-CBL40-2S	Cable for module with 40-pin connector to 40-pin connector, shielded, 24 AWG, 6.6 ft. (2.0 m) (High-Speed I/O modules only)	300V, 80˚C	1.2	$66.00
Serial Communication ZIPLink Cables				
ZL-RJ12-CBL-2	Crossover cable with 6-pin RJ12 to 6-pin RJ12 connectors, 26 AWG, 6.6 ft. (2.0 m)	150V, 60˚C	0.26	$8.00
ZL-RJ12-CBL-2P	Cable with 6-pin RJ12 connector to 6-wire pigtail, 26 AWG, 6.6 ft. (2.0 m)	150V, 60˚C	0.26	$9.25

ZL-P2-CBL18-1

ZL-P2-CBL18-1P

ZL-RJ12-CBL-2

ZL-RJ12-CBL-2P

ZL-P2-CBL24-1P

Connection Cables (cont.)

*ZIP*Link Connection Cables				
Part Number	***Description***	***Insulation Rating***	***Weight (lbs)***	***Price***
Productivity3000 ZIPLink Cables				
ZL-P3-CBL20	Cable for module with 20 terminals to 20-pin connector, 24 AWG, 1.6 ft. (0.5 m)	300V, 80˚C	0.36	$53.00
ZL-P3-CBL20-1	Cable for module with 20 terminals to 20-pin connector, 24 AWG, 3.3 ft. (1.0 m)	300V, 80˚C	0.36	$63.00
ZL-P3-CBL20-2	Cable for module with 20 terminals to 20-pin connector, 24 AWG, 6.6 ft. (2.0 m)	300V, 80˚C	0.56	$72.00
ZL-P3-CBL20-L	Cable for module with 20-pin connector to 20-pin connector for LED module, 24 AWG, 1.6 ft. (0.5 m)	300V, 80˚C	0.36	$59.00
ZL-P3-CBL20-1L	Cable for module with 20-pin connector to 20-pin connector for LED module, 24 AWG, 3.3 ft. (1.0 m)	300V, 80˚C	0.36	$63.00
ZL-P3-CBL20-2L	Cable for module with 20-pin connector to 20-pin connector for LED module, 24 AWG, 6.6 ft. (2.0 m)	300V, 80˚C	0.56	$72.00
ZL-P3-CBL20-P	Cable for module with 20-pin connector to 20-wire pigtail, 24 AWG, 1.6 ft. (0.5 m)	300V, 80˚C	0.36	$57.00
ZL-P3-CBL20-1P	Cable for module with 20-pin connector to 20-wire pigtail, 24 AWG, 3.3 ft. (1.0 m)	300V, 80˚C	0.56	$52.00
ZL-P3-CBL20-2P	Cable for module with 20-pin connector to 20-wire pigtail, 24 AWG, 6.6 ft. (2.0 m)	300V, 80˚C	0.61	$63.00
ZL-CBL40	Cable for module with 40-pin connector to 40-pin connector, 24 AWG, 1.6 ft. (0.5 m)	300V, 80˚C	0.36	$37.50
ZL-CBL40-1	Cable for module with 40-pin connector to 40-pin connector, 24 AWG, 3.3 ft. (1.0 m)	300V, 80˚C	0.56	$44.50
ZL-CBL40-2	Cable for module with 40-pin connector to 40-pin connector, 24 AWG, 6.6 ft. (2.0 m)	300V, 80˚C	0.61	$60.00
ZL-CBL40-S	Cable for module with 40-pin connector to 40-pin connector, shielded, 24 AWG, 1.6 ft. (0.5 m) (High-Speed I/O modules only)	300V, 80˚C	0.4	$43.00
ZL-CBL40-1S	Cable for module with 40-pin connector to 40-pin connector, shielded, 24 AWG, 3.3 ft. (1.0 m) (High-Speed I/O modules only)	300V, 80˚C	0.7	$55.00
ZL-CBL40-2S	Cable for module with 40-pin connector to 40-pin connector, shielded, 24 AWG, 6.6 ft. (2.0 m) (High-Speed I/O modules only)	300V, 80˚C	1.2	$66.00
ZL-P3-CBL40-1P	Cable for module with 40 terminals to pigtail, 24 AWG, 3.3 ft. (1.0 m)	300V, 80˚C	0.41	$43.00
ZL-P3-CBL40-2P	Cable for module with 40 terminals to pigtail, 24 AWG, 6.6 ft. (2.0 m)	300V, 80˚C	0.56	$62.00
Universal ZIPLink Cables				
ZL-CBL24-1P	Cable with 24-pin connector to 24-wire pigtail for connecting any 24-pin ***ZIP***Link module to another device, 24 AWG, 3.3 ft. (1.0 m)	300V, 80˚C	0.36	$28.50
ZL-CBL24-2P	Cable with 24-pin connector to 24-wire pigtail for connecting any 24-pin ***ZIP***Link module to another device, 24 AWG, 6.6 ft. (2.0 m)	300V, 80˚C	0.56	$36.00
ZL-DB9F-CBL-2P	***ZIP***Link pigtail cable with 9-pin D-sub female connector, 28 AWG, 2.0 m (6.6 ft) length	300V, 80˚C	0.30	$14.00
ZL-DB9F-CBL-5P	***ZIP***Link pigtail cable with 9-pin D-sub female connector, 28 AWG, 5.0 m (16.4 ft) length	300V, 80˚C	0.30	$27.00
ZL-CBL40-1P	Cable that allows the ZL-RTB40, ZL-RFU40 or ZL-LTB32-24-1 to custom wire to third party devices, 24 AWG, 3.3 ft. (1.0 m)	300V, 80˚C	0.41	$43.50
ZL-CBL40-2P	Cable that allows the ZL-RTB40, ZL-RFU40 or ZL-LTB32-24-1 to custom wire to third party devices, 24 AWG, 6.6 ft. (2.0 m)	300V, 80˚C	0.56	$60.00
Serial Communication ZIPLink Cables				
ZL-DB9-CBL-2	Shielded cable with 9-pin D-sub male to female connectors, 28 AWG, 6.6 ft. (2.0 m)	300V, 80˚C	0.36	$12.00
ZL-DB15-CBL-2	Shielded cable with 15-pin D-sub male to female connectors, 28 AWG, 6.6 ft. (2.0 m)	300V, 80˚C	0.56	$16.00
ZL-DB25-CBL-2	Shielded cable with 25-pin D-sub male to female connectors, 28 AWG, 6.6 ft. (2.0 m)	300V, 80˚C	0.56	$19.00
ZL-RJ12-CBL-2	Crossover cable with 6-pin RJ12 to 6-pin RJ12 connectors, 26 AWG, 6.6 ft. (2.0 m)	150V, 60˚C	0.26	$8.00
ZL-RJ12-CBL-2P	Cable with 6-pin RJ12 connector to 6-wire pigtail, 26 AWG, 6.6 ft. (2.0 m)	150V, 60˚C	0.26	$9.25

ZL-P3-CBL20-1

ZL-CBL24-1P

ZL-DB9-CBL-2

ZL-RJ12-CBL-2

ZL-DB9F-CBL-2P

ZL-RJ12-CBL-2P

Connection Cables (cont.)

*ZIP*Link Connection Cables				
Part Number	***Description***	***Insulation Rating***	***Weight (lbs)***	***Price***
AC Drive, Servo, Stepper, and Soft Starter ZIPLink Cables				
GS-RJ12-CBL-2	RS232 cable with 6-pin RJ12 connector to 6-pin RJ12 connector for GS2 Series drives ONLY. 26 AWG, 6.6 ft. (2.0 m)	300V, 80˚C	0.26	$12.00
GS-485HD15-CBL-2	RS485 shielded twisted pair cable with 6-pin RJ12 to 15-pin male D-sub connector for all GS Series/DuraPulse drives, 28 AWG, 6.6 ft. (2.0 m)	30V, 80˚C	0.26	$13.00
GS-485RJ12-CBL-2	GS drive communication cable with 6-pin RJ12 connector to 6-pin RJ12 connector, 3-wire straight-through, 26 AWG, 6.6 ft. (2.0 m). Use this cable and a ZL-CDM-RJ12Xxx distribution module to create a plug and play RS-485 network. Connect multiple SureServo amplifiers, Stellar SR44 soft starters, GS series drives, and Durapulse series drives to a PLC via RS-485.	300V, 80˚C	0.11	$9.50
GS-EDRV-CBL-2	GS drive communication cable with 6-pin RJ12 connector to 6-pin RJ12 connector, 6-wire straight-through, 26 AWG, 6.6 ft. (2.0 m). Use this cable to connect GS series and Durapulse series drives to the GS-EDRV Ethernet communication module.	150V, 60˚C	0.11	$9.00
GS-ISOCON-CBL-2	***ZIP***Link GS drive cable, 6-pin RJ12 to 5-pin terminal block, 6.5ft/2m cable length. For use with GS series drives and FA-ISOCON converter.	150V, 60˚C	0.11	$13.00
ZL-SVC-CBL50	Shielded twisted pair cable with 50-pin connectors to connect any SureServo amplifier to a ZL-RTB50 module, 28 AWG, 1.6 ft. (0.5 m)	30V, 80˚C	0.36	$57.00
ZL-SVC-CBL50-1	Shielded twisted pair cable with 50-pin connectors to connect any SureServo amplifier to a ZL-RTB50 module, 28 AWG, 3.3 ft. (1.0 m)	30V, 80˚C	0.46	$55.00
ZL-SVC-CBL50-2	Shielded twisted pair cable with 50-pin connectors to connect any SureServo amplifier to a ZL-RTB50 module, 28 AWG, 6.6 ft. (2.0 m)	30V, 80˚C	0.56	$63.00
ZL-CBL50-1P	SureServo cable used to connect any SureServo amplifier to custom wire to third party devices, 28AWG, 3.3 ft. (1.0 m)	30V, 80˚C	0.46	$63.00
ZL-CBL50-2P	SureServo cable used to connect any SureServo amplifier to custom wire to third party devices, 28AWG, 6.6 ft. (2.0 m)	30V, 80˚C	0.56	$62.00
SVC-232RJ12-CBL-2	RS232 shielded twisted pair cable with 6-pin RJ12 to 6-pin IEEE connector for all SureServo amplifiers, 6.6 ft. (2.0m)	30V, 80˚C	0.16	$12.50
SVC-485HD15-CBL-2	***ZIP***Link servo cable, 15-pin D-sub HD15 male to 6-pin IEEE connector, shielded, twisted pair, RS-485, 6.5ft/2m cable length. For use with SureServo amplifiers.	30V, 80˚C	0.26	$13.50
SVC-485RJ12-CBL-2	***ZIP***Link servo cable, 6-pin RJ12 to 6-pin IEEE connector, shielded, twisted pair, RS-485, 6.5ft/2m cable length. For use with SureServo amplifiers.	30V, 80˚C	0.16	$17.00
SVC-485CFG-CBL-2	***ZIP***Link servo cable, 6-pin RJ45 to 6-pin IEEE connector, shielded, twisted pair, RS-485, 6.5ft/2m cable length. For use with SureServo amplifiers.	30V, 80˚C	0.16	$20.00
STP-232RJ12-CBL-2	SureStep drive communication cable with 6P4C RJ11 connector to 6-pin RJ12 connector, 3-wire, RS-232, 26 AWG, 6.6 ft. (2.0 m). Use this cable to connect STP-DRV-4850 or STP-DRV-80100 stepper drives to a DL05 PLC or a CLICK PLC.	300V, 80˚C	0.11	$12.00
STP-232HD15-CBL-2	***ZIP***Link stepper cable, 6P4C RJ11 to 15-pin D-sub HD15 male, shielded, twisted pair, RS-232, 6.5ft/2m cable length. For use with SureStep drives.	30V, 80˚C	0.21	$19.00
SR44-485HD15-CBL-2	***ZIP***Link soft starter cable, 6-pin RJ45 to 15-pin D-sub HD15 male, shielded, twisted pair, RS-485, 6.5ft/2m cable length. For use with Stellar soft starters.	30V, 80˚C	0.21	$18.00
SR44-485RJ45-CBL-2	Stellar SR44 soft starter communication cable with 6-pin RJ45 connector to 6-pin RJ12 connector, 3-wire, RS-485, 26 AWG, 6.6 ft. (2.0 m). Use this cable and a ZL-CDM-RJ12Xxx distribution module to create a plug and play RS-485 network. Connect multiple SureServo amplifiers, Stellar SR44 soft starters (with optional SR44-RS485 communication adapter), GS series drives, and Durapulse series drives to a PLC via RS-485.	30V, 80˚C	0.16	$13.50

GS-485HD15-CBL-2

SVC-232RJ12-CBL-2

SVC-485HD15-CBL-2

ZL-SVC-CBL50

ZL-CBL50-1P