Productivity®2000 Overview

Bases

Four bases are available, with 4, 7, 11, or 15 slots.

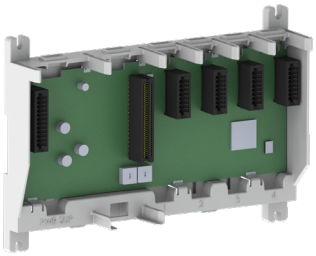

Productivity2000 Bases		
Part Number	**Description**	**Price**
P2-04B	4-slot base	$108.00
P2-07B	7-slot base	$145.00
P2-11B	11-slot base	$195.00
P2-15B	15-slot base	$228.00

Power Supply

Four power supplies are available. One accepts 24VDC, one accepts 24-48 VDC, the other two are dual voltage - one accepting 100–240 VAC or 125VDC and the other 24VAC or 12-24 VDC.

Productivity2000 Power Supplies		
Part Number	**Description**	**Price**
P2-01DC	Power supply (24–48 VDC source)	$117.00
P2-02DC	Power supply (24VDC source)	$86.00
P2-01AC	Power supply (100–240 VAC or 125VDC source)	$105.00
P2-01DCAC	Power supply (24VAC or 12–24 VDC source)	$120.00

CPU Module

Two CPU modules are currently available - P2-622 and P2-550.

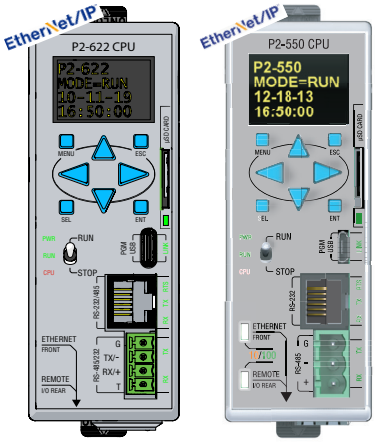

Productivity2000 CPU Module		
Part Number	**Description**	**Price**
P2-550	CPU module	$365.00
P2-622	CPU module	$302.00

Remote Slave Module

One remote slave module is currently available.

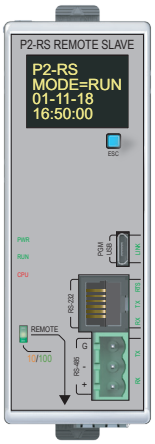

Productivity2000 Remote Slave Module		
Part Number	**Description**	**Price**
P2-RS	Remote Slave module	$332.00

Productivity®2000 Overview

Discrete I/O Modules

Nine discrete input and fourteen discrete output modules are available.

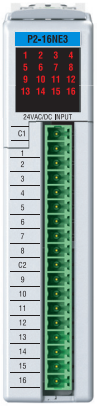

Discrete Input Modules

Part Number	Description	Price
P2-08SIM	Input Simulator	$69.00
P2-08ND3-1	Sinking/Sourcing 12–24 VDC	$72.00
P2-16ND3-1	Sinking/Sourcing 12–24 VDC	$100.00
P2-32ND3-1	Sinking/Sourcing 12–24 VDC	$148.00
P2-08NE3	Sinking/Sourcing 24V AC/DC	$59.00
P2-16NE3	Sinking/Sourcing AC/DC	$101.00
P2-32NE3	Sinking/Sourcing 24V AC/DC	$148.00
P2-08NAS	AC Isolated 100–120 VAC	$113.00
P2-16NA	AC Input 100–240 VAC	$154.00

Discrete Output Modules

Part Number	Description	Price
P2-08TD1S	Isolated Sinking	$70.00
P2-08TD2S	Isolated Sourcing	$70.00
P2-15TD1	Sinking	$97.00
P2-15TD2	Sourcing	$95.00
P2-08TD1P	Sinking Protected	$60.00
P2-08TD2P	Sourcing Protected	$60.00
P2-16TD1P	Sinking Protected	$101.00
P2-16TD2P	Sourcing Protected	$101.00
P2-32TD1P	Sinking Protected	$148.00
P2-32TD2P	Sourcing Protected	$148.00
P2-08TAS	Isolated AC	$154.00
P2-16TA	AC Output	$190.00
P2-08TRS	Isolated Relay	$73.00
P2-16TR	Relay	$137.00

Analog I/O Modules

14 analog input, 13 analog output, and 2 analog input/output combo modules are available.

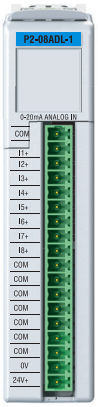

Analog Input Modules

Part Number	Description	Price
P2-04AD	Voltage/Current	$288.00
P2-04AD-1	Current	$217.00
P2-04AD-2	Voltage	$224.00
P2-08AD-1	Current	$303.00
P2-08AD-2	Voltage	$333.00
P2-08ADL-1*	Current	$212.00
P2-08ADL-2*	Voltage	$230.00
P2-16AD-1	Current	$366.00
P2-16AD-2	Voltage	$406.00
P2-16ADL-1*	Current	$261.00
P2-16ADL-2*	Voltage	$289.00
P2-06RTD	RTD	$476.00
P2-08NTC	Thermistor	$424.00
P2-08THM	Thermocouple	$468.00

** Low resolution analog modules without OLED display.*

Analog Output Modules

Part Number	Description	Price
P2-04DA	Voltage/Current	$286.00
P2-04DA-1	Current	$217.00
P2-04DA-2	Voltage	$212.00
P2-04DAL-1*	Current	$162.00
P2-04DAL-2*	Voltage	$151.00
P2-08DA-1	Current	$398.00
P2-08DA-2	Voltage	$365.00
P2-08DAL-1*	Current	$297.00
P2-08DAL-2*	Voltage	$288.00
P2-16DA-1	Current	$521.00
P2-16DA-2	Voltage	$499.00
P2-16DAL-1*	Current	$371.00
P2-16DAL-2*	Voltage	$355.00

** Low resolution analog modules without OLED display.*

Analog Input/Output Modules

Part Number	Description	Price
P2-8AD4DA-1	Current	$456.00
P2-8AD4DA-2	Voltage	$456.00

Specialty Modules

A selection of specialty modules provide high-speed capabilities and additional serial communication ports.

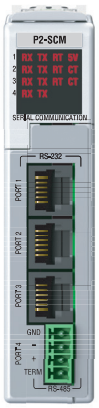

Specialty Modules

Part Number	Description	Price
P2-HSI	High-speed input	$288.00
P2-HSO	High-speed output	$288.00
P2-04PWM	High-speevd pulse-width modulation	$132.00
P2-02HSC	High-speed counter	$120.00
P2-SCM	Serial communications module	$242.00

Productivity®2000 Overview

What you'll need:

Of course, what you'll need for your system depends on your particular application however, this overview shows you what you'll need for a simple system.

1. ***Select and order your base.***

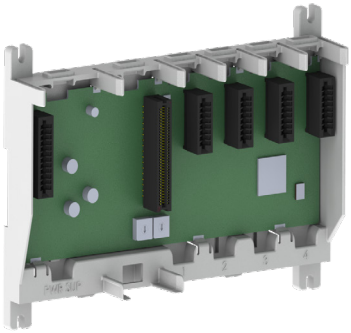

2. ***Select one of the four available power supplies.***

3. ***Order the CPU module.***

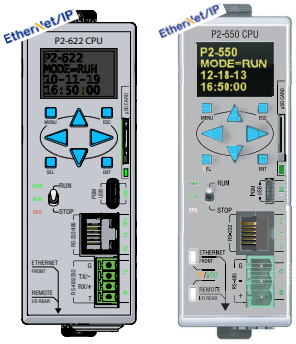

4. ***Order USB or Download (Free!) and install the Productivity Suite programming software onto your PC.***

5. ***Select and order your I/O modules.***
At the same time, select and order your ZIPLink wiring system or removable terminal blocks.

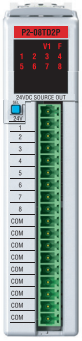

6. ***Select your PC-to-CPU programming cable.***
You will need a standard USB Type A to Micro USB Type B cable or Ethernet cable (Cross-over or Straight) for programming.

7. ***Select tools, wire, and provide power.***

Screwdriver
TW-SD-MSL-1

Wire Strippers
DN-WS

Hookup Wire

Programming Software

PS-PGMSW
FREE OnLine Download

Productivity Suite is user-friendly programming software designed to allow quick and easy programming of ladder logic programs for the Productivity®1000, Productivity®2000 and Productivity3000® CPUs.

The online help file provides information that will help you get acquainted with the software quickly.

PC Requirements

Productivity Suite, a Windows-based programming software, is available as a FREE download at http://support.automationdirect.com/downloads.html. Please check our website for your product's current operating system requirements.

Programming Cable

You will need a Micro USB or Cat-5 Ethernet cable for programming, depending on whether you use the USB or Ethernet programming port.

We recommend using a USB programming cable; just plug it in and it works. We sell these USB Type A to Micro Type B USB cables:

- USB-CBL-AMICB6 (6 ft.)
- USB-CBL-AMICB15 (15 ft.)
- USB-CBL-AC6 (6 ft.)

Main window

The Main Window is displayed when the program opens. It is divided into Menus, Toolbars, and Windows that work together to make project development as simple as possible.

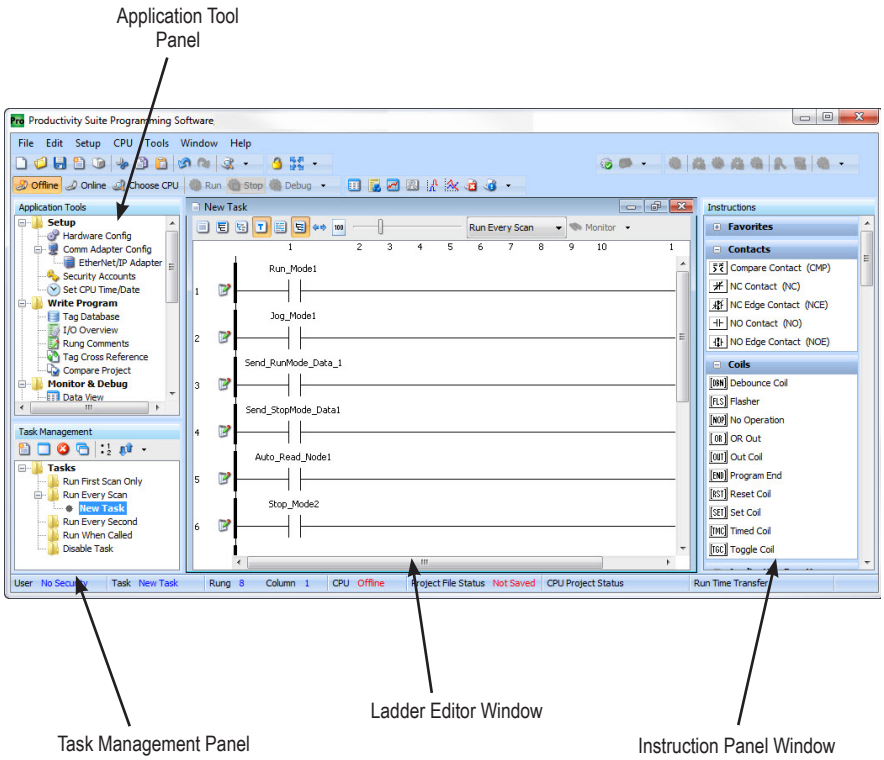

Bases

P2-04B	$108.00
P2-07B	$145.00
P2-11B	$195.00
P2-15B	$228.00

The P2-04B, P2-07B, P2-11B, and P2-15B are 4, 7, 11, or 15-slot I/O bases respectively.

See Dimensions and Installation for base dimensions.

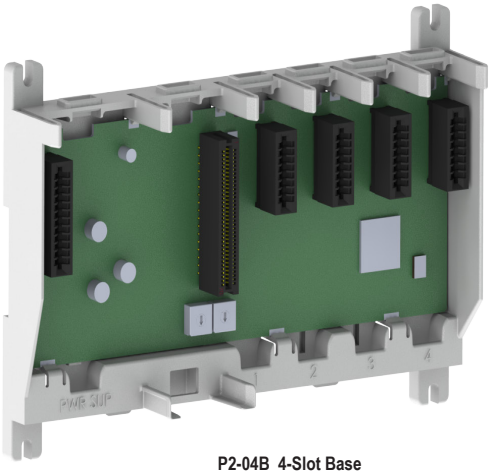

P2-04B 4-Slot Base

Base Specifications

Input or Output Modules per Base	4, 7, 11, or 15
Power Supply Slots	1 (For P2-01AC,, P2-01DCAC),P2-01DC, or P2-02DC)
CPU Slots	1 (P2-550)
Module Types Supported	Discrete, analog and specialty
Module Placement Restrictions	None. Any I/O module may be installed in any I/O slot without power supply budget or module type restrictions.
I/O Module Hot Swap Support	Yes. All discrete, analog and specialty modules can be software enabled for Hot Swap operation.
Module Keying	Electronic to slot
Maximum Number of Local Bases	1

General Specifications

Operating Temperature	0° to 60°C (32° to 140°F)
Storage Temperature	-20° to 70°C (-4° to 158°F)
Humidity	5 to 95% (non-condensing)
Altitude	2000 meters max.
Pollution Degree	2
Environmental Air	No corrosive gases permitted
Vibration	IEC60068-2-6 (Test Fc)
Shock	IEC60068-2-27 (Test Ea)
Overvoltage Category	II
Heat Dissipation	3W
Weight	P2-04B: 204g (7.2 oz) P2-07B: 294g (10.4 oz) P2-11B: 430g (15.2 oz) P2-15B: 539g (19oz)
Agency Approvals**	UL 61010-1 and UL 61010-2-201 File E139594, Canada and USA CE (EN 61131-2 EMC, EN 61010-1 and EN 61010-2-201 Safety)*

**Meets EMC and Safety requirements. See the Declaration of Conformity for details.*
***To obtain the most current agency approval information, see the Agency Approval Checklist section on the specific component part number web page.*

Base Configuration

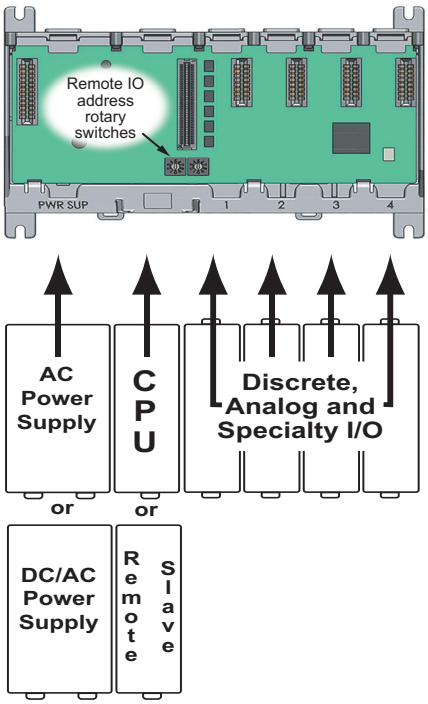

Power Supplies

P2-01AC $105.00

The P2-01AC Input Power Supply provides isolated power to the Productivity®2000 base from an external 100-240 VAC or 125VDC source.

No power budgeting is required. Any combination of I/O modules may be installed in any slots without power budget considerations.

AC Input Power Supply

IMPORTANT!

Hot-Swapping Information
NOTE: This device cannot be Hot Swapped.

User Specifications	
Input Voltage Range (Tolerance)	100 to 240 VAC (-15% / +10%) 125VDC* (-15% / +20%)
Rated Operating Frequency	50 to 60 Hz with ±5% tolerance
Maximum Input Power	37.4 W
Cold Start Inrush Current	23.6 A
Maximum Inrush Current (Hot Start)	25.6 A
Input Fuse Protection (Internal)	Micro fuse 250V, 2A, Non-replaceable
Efficiency	75%
Output	UL Rated: 24VDC, 0.85 A 3.3 VDC, 3.81 A
Maximum Output Power	29W Combined
Heat Dissipation	8.4 W
Isolated User 24VDC Output	None
Output Protection for Over Current, Over Voltage, and Over Temperature	Self resetting for both voltage outputs to base
Under Input Voltage Lock-out	<70 VAC
Over Input Voltage Lock-out	None
Input Transient Protection	Varistor, plus input choke and filter
Operating Design Life	10 years at full load at 40°C ambient and 5 years at 60°C ambient

**Only available on Rev. B and up.*

General Specifications	
Operating Temperature	0° to 60°C (32° to 140°F)
Storage Temperature	-20° to 70°C (-4° to 158°F)
Humidity	5 to 95% (non-condensing)
Altitude	2,000 meters, max.
Pollution Degree	2
Environmental Air	No corrosive gases permitted
Vibration	IEC60068-2-6 (Test Fc)
Shock	IEC60068-2-27 (Test Ea)
Overvoltage	II
Enclosure Type	Open equipment
Voltage Withstand (dielectric)	2100VDC applied for 2 seconds
Insulation Resistance	>10MV @ 500VDC
Module Location	Power Supply slot in a Productivity2000 system.
Weight	294g (10.4 oz)
Agency Approvals**	UL 61010-1 and UL 61010-2-201 File E139594, Canada and USA CE (EN 61131-2 EMC, EN 61010-1 and EN 61010-2-201 Safety)*

**Meets EMC and Safety requirements. See the Declaration of Conformity for details.*
***To obtain the most current agency approval information, see the Agency Approval Checklist section on the specific component part number web page.*

Terminal Block Specifications	
Number of Positions	4 Screw Terminals
Wire Range	22–12 AWG (0.324 to 2.08 sq. mm) Solid/Stranded Conductor 3/64 inch (1.2 mm) insulation maximum Use copper conductors, 75°C or equivalent
Screw Driver Width	1/4 inch (6.5 mm) maximum
Screw Size	M3 size
Screw Torque	7–9 inch-pounds (0.882 - 1.02 N·m)

Power Supplies

P2-01DCAC $120.00

The P2-01DCAC Input Power Supply provides isolated power to the Productivity®2000 base from an external 24VAC or 12–24 VDC source.

No power budgeting is required. Any combination of I/O modules may be installed in any slots without power budget considerations.

AC/DC Input Power Supply

IMPORTANT!

Hot-Swapping Information
NOTE: This device cannot be Hot Swapped.

P2-01DCAC Specifications

User Specifications		
Input Voltage Range (Tolerance)	24VAC (-10% / +20%)	12–24 VDC (-10% / +20%)
Maximum Input Power	72VA	45W
Maximum Input Ripple	Less than ±5%	
Cold Start Inrush Current	45A, 4µS @ 24VDC	
Maximum Inrush Current (Hot Start)	Same as Cold Start Inrush Current	
Rated Operating Frequency	50 to 60 Hz with ±5% tolerance	
Input Fuse Protection (Internal)	Micro Fuse 250V, 6.3 A Slow Blow Non-replaceable	
Input Fuse Protection (External)	6A Slow Blow (Recommended)	
Input Reverse Polarity Protection	Yes	
Output Voltages	24VDC, 0.85 A 3.3 VDC, 3.81 A	
Maximum Output Power	32W Combined	
Isolated User 24VDC Output	None	
Output Protection for Over Current, Over Voltage, and Over Temperature	Self resetting for both voltage outputs to base	
Under Input Voltage Lock-out	Yes, <10VDC	
Over Input Voltage Lock-out	No	
Input Transient Protection	Transorb Plus Input Choke/Filter	
Operating Design Life	10 years at full load at 40°C ambient and 5 years at 60°C ambient	

General Specifications	
Operating Temperature	0º to 60ºC (32º to 140ºF)
Storage Temperature	-20º to 70ºC (-4º to 158ºF)
Humidity	5 to 95% (non-condensing)
Altitude	2,000 meters, max.
Pollution Degree	2
Environmental Air	No corrosive gases permitted
Vibration	IEC60068-2-6 (Test Fc)
Shock	IEC60068-2-27 (Test Ea)
Overvoltage Category	II
Enclosure Type	Open equipment
Voltage Withstand (dielectric)	750VDC applied for 2 seconds
Insulation Resistance	>10MΩ @ 500VDC
Module Location	Power Supply slot in a Productivity2000 system.
Weight	284g (10 oz)
Agency Approvals	UL 61010-1 and UL 61010-2-201 File E139594, Canada and USA CE (EN 61131-2 EMC, EN 61010-1 and EN 61010-2-201 Safety)*

**Meets EMC and Safety requirements. See the Declaration of Conformity for details.*
***To obtain the most current agency approval information, see the Agency Approval Checklist section on the specific component part number web page.*

Terminal Block Specifications	
Number of Positions	4 Screw Terminals
Wire Range	22–12 AWG (0.324 to 2.08 sq. mm) Solid/Stranded Conductor 3/64 inch (1.2 mm) insulation maximum Use copper conductors, 75°C or equivalent
Screw Driver Width	1/4 inch (6.5 mm) maximum
Screw Size	M3 size
Screw Torque	7–9 inch-pounds (0.882 - 1.02 N·m)

Power Supplies

P2-01DC $117.00

The P2-01DC Universal Input Power Supply provides isolated power to the Productivity®2000 base from an external 24–48 VDC source.

No power budgeting is required. Any combination of I/O modules may be installed in any slots without power budget considerations.

DC Input Power Supply

IMPORTANT!

Hot-Swapping Information
NOTE: This device cannot be Hot Swapped.

P2-01DC Specifications

User Specifications	
Input Voltage Range (Tolerance)	24 to 48 VDC (-15% / +20% @60°C)
Maximum Input Power	38W
Cold Start Inrush Current	34A
Maximum Inrush Current (Hot Start)	34A
Input Fuse Protection (Internal)	Micro Fuse 250V, 4A Non-replaceable
Efficiency	75%
Output	UL Rated: 24VDC, 0.85 A 3.3 VDC, 3.81 A
Maximum Output Power	29W combined
Heat Dissipation	9W
Isolated User 24VDC Output	None
Output Protection for Over Current, Over Voltage, and Over Temperature	Self resetting for both voltage outputs to base
Under Input Voltage Lock-out	<19.8 V
Over Input Voltage Lock-out	None
Input Transient Protection	Varistor, plus input choke and filter
Operating Design Life	10 years at full load at 60°C ambient

General Specifications	
Operating Temperature	0º to 60ºC (32º to 140ºF)
Storage Temperature	-20º to 70ºC (-4º to 158ºF)
Humidity	5 to 95% (non-condensing)
Altitude	2,000 meters, max.
Pollution Degree	2
Environmental Air	No corrosive gases permitted
Vibration	IEC60068-2-6 (Test Fc)
Shock	IEC60068-2-27 (Test Ea)
Overvoltage Category	II
Enclosure Type	Open equipment
Voltage Withstand (dielectric)	750VDC applied for 2s
Insulation Resistance	>10MΩ @ 500VDC
Module Location	Power Supply slot in a Productivity®2000 system.
Weight	363g (12.8 oz)
Agency Approvals	UL 61010-1 and UL 61010-2-201 File E139594, Canada and USA CE (EN 61131-2 EMC, EN 61010-1 and EN 61010-2-201 Safety)*

**Meets EMC and Safety requirements. See the D.O.C. for details.*

Terminal Block Specifications	
Number of Positions	4 Screw Terminals
Wire Range	22–12 AWG (0.324 to 3.31 sq. mm) Solid Conductor 3/64 inch (1.2 mm) insulation maximum (Use copper conductor, 75°C or equivalent)
Screw Driver Width	1/4 inch (6.5 mm) maximum
Screw Size	M3
Screw Torque	7–9 inch-pounds (0.882–1.02 N·m)

Power Supplies

P2-02DC $86.00

The P2-02DC Power Supply provides isolated power to the Productivity®2000 base from an external 24VDC source.

No power budgeting is required. Any combination of I/O modules may be installed in any slots without power budget considerations.

DC Input Power Supply

IMPORTANT!

Hot-Swapping Information
NOTE: This device cannot be Hot Swapped.

User Specifications	
Input Voltage Range (Tolerance)	24VDC (±2%)
Maximum Input Power	50W
Cold Start Inrush Current	34A
Maximum Inrush Current (Hot Start)	34A
Input Fuse Protection (Internal)	Micro Fuse 250V, 4A Non-replaceable
Efficiency	90%
Output	24VDC, 1.5 A 3.3 VDC, 4A
Maximum Output Power	45W combined
Heat Dissipation	5W
Isolated User 24VDC Output	None
Output Protection for Overcurrent, Overvoltage, and Over-Temperature	3.3 V output self-resetting 24V output fused
Under Input Voltage Lock-out	None
Over Input Voltage Lock-out	None
Input Transient Protection	Transorb, plus input choke and filter
Operating Design Life	>10 years at full load at 60°C ambient

General Specifications	
Operating Temperature	0º to 60ºC (32º to 140ºF)
Storage Temperature	-20º to 70ºC (-4º to 158ºF)
Humidity	5 to 95% (non-condensing)
Altitude	2000m, max.
Pollution Degree	2
Environmental Air	No corrosive gases permitted
Vibration	IEC60068-2-6 (Test Fc)
Shock	IEC60068-2-27 (Test Ea)
Overvoltage Category	II
Enclosure Type	Open equipment
Voltage Withstand (dielectric)	Non-isolated
Insulation Resistance	Non-isolated
Module Location	Power Supply slot in a Productivity®2000 system.
Weight	90g (3.2 oz)
Agency Approvals	UL 61010-1 and UL 61010-2-201 File E139594, Canada and USA CE (EN 61131-2 EMC, EN 61010-1 and EN 61010-2-201 Safety)*

**Meets EMC and Safety requirements. See the D.O.C. for details.*

Terminal Block Specifications	
Number of Positions	4 screw terminals
Wire Range	22–12 AWG (0.324 to 3.31 sq. mm) Solid / stranded conductor 3/64 inch (1.2 mm) insulation maximum (Use copper conductor, 75°C or equivalent)
Conductors	USE COPPER CONDUCTORS, 75°C or equivalent 1/4 in. (6-7 mm) strip length
Screw Driver Width	1/4 inch (6.5 mm) maximum
Screw Size	M3
Screw Torque	7–9 lb·in (0.882–1.02 N·m)

Power Supply

Power Supply Installation

Step One:

Locate the left most socket in the base.

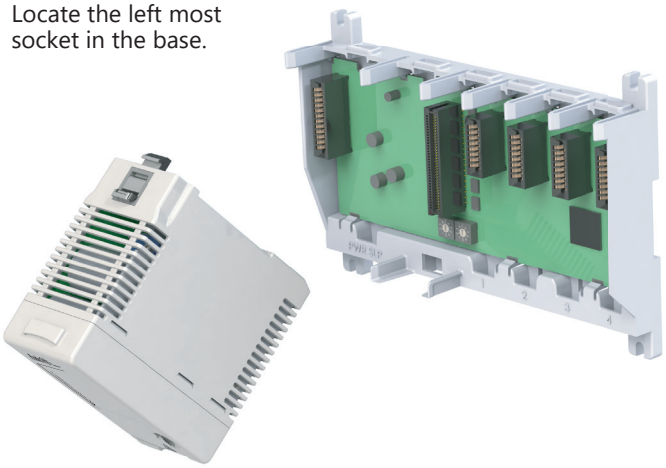

Step Two:

Insert the Power Supply at a 30° angle into the notch located at the bottom of the base and rotate up until seated in socket.

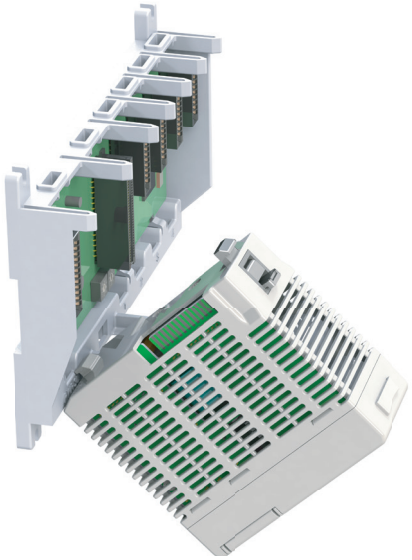

Step Three:

Snap the top retaining tab into the locked position.

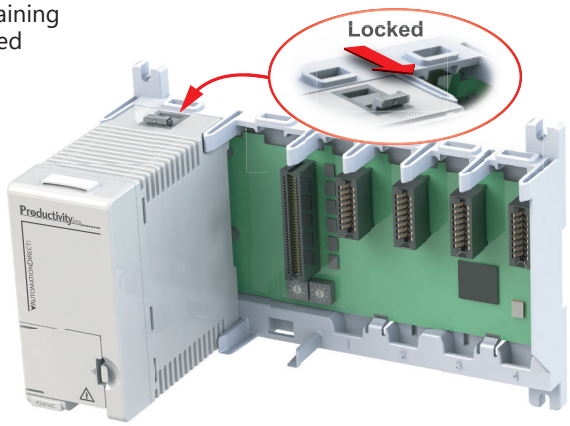

Power Supplies

Power Connections

P2-01DC

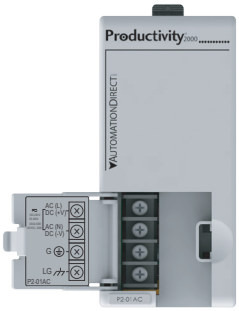

100-240 VAC, 125VDC

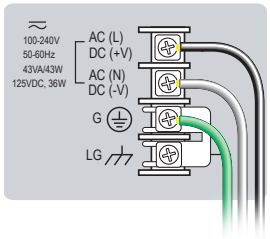

P2-01DCAC

12–24 VDC

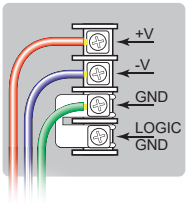

24VAC

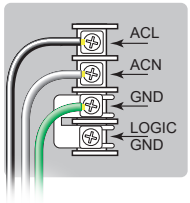

P2-01DC

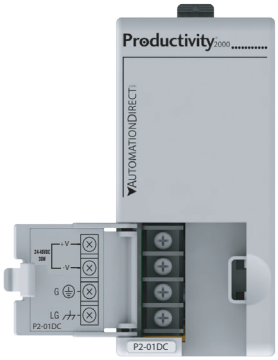

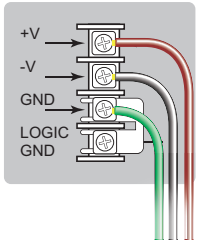

24–48 VDC

P2-02DC

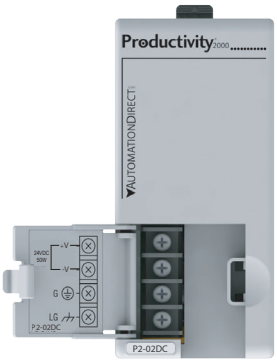

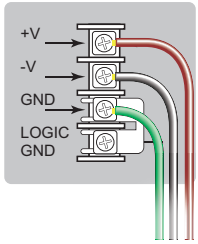

24VDC

Grounding

A good common ground reference (earth ground) is essential for proper operation of the Productivity® 2000 system. One side of all control circuits, power circuits and the ground lead must be properly connected to earth ground by either installing a ground rod in close proximity to the enclosure or by connecting to the incoming power system ground. There must be a single-point ground (i.e. copper bus bar) for all devices in the enclosure that require an earth ground.

Terminal Block Specifications	
Number of Positions	4 screw terminals
Wire Range	22–12 AWG (0.324 to 3.31 sq. mm) Solid / stranded vonductor 3/64 inch (1.2 mm) insulation maximum (Use copper conductor, 75°C or equivalent)
Conductors	USE COPPER CONDUCTORS, 75°C or equivalent 1/4 in. (6-7 mm) strip length
Screw Driver Width	1/4 inch (6.5 mm) maximum
Screw Size	M3
Screw Torque	7–9 inch-pounds (0.882–1.02 N·m)

P2-622 CPU Module

P2-622 $302.00

The P2-622 is a high-performance CPU which has communications ports that support Ethernet and serial devices. The P2-622 also includes a 4-line x 10-character OLED local display and a USB programming port.

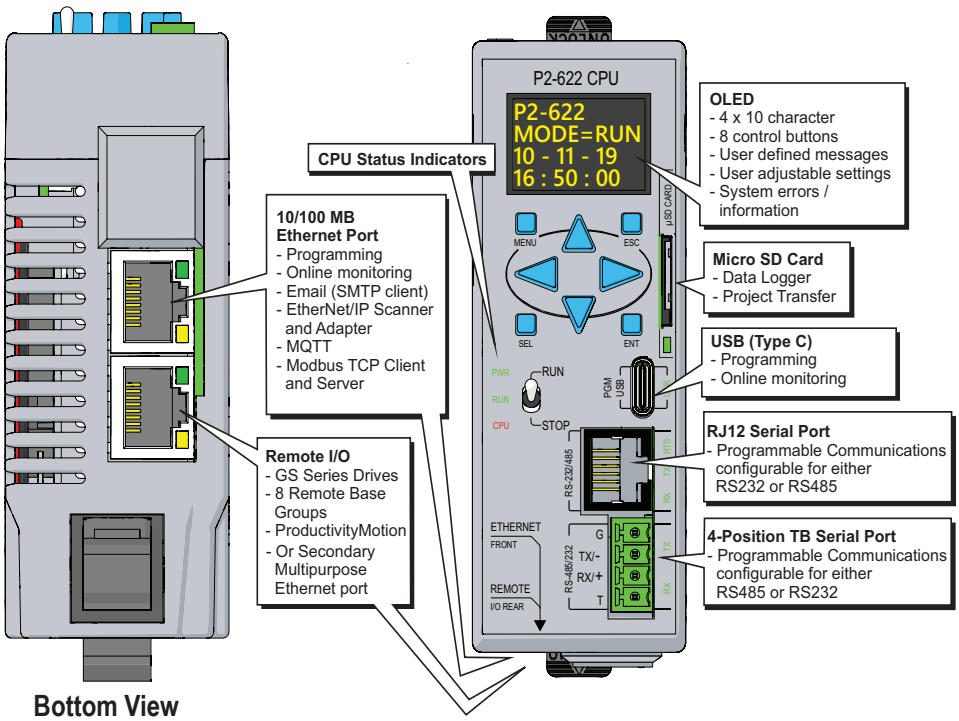

CPU Run/Stop Switch	
RUN position	Executes user program, run-time edits possible
STOP position	Does not execute user program, normal program load position

CPU Status Indicators	
PWR	Green LED is illuminated when power is ON
RUN	Green LED is illuminated when CPU is in RUN mode
CPU	Red LED is illuminated during power ON reset, power down, or watch-dog time-out.

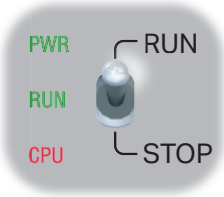

P2-622 CPU Module

CPU Specifications

User Memory	50MB (Includes program, data and documentation)	
Memory Type	Flash and Battery Backed RAM	
Retentive Memory	512KB	
Scan Time	500µs (3K Boolean, 240 I/O)	
Display	OLED, 4x10 characters, 8 control buttons	
Communications; 5 Integrated Ports	USB IN: Programming, Monitoring, Debug, Firmware ETHERNET: (10/100Mbps Ethernet) Programming, Monitoring, Debug, Firmware, MQTT, Email SMTP Client, Modbus TCP Client (32 Servers) and Server (16 Clients), EtherNet/IP Scanner (32 Adapters) and Adapter (4 scanners) with 8 connections per device. REMOTE I/O: 16 GS-EDRV100 (GS Drives), 8 Remote Base Groups RJ12 RS232/485: Programmable 4 Position TB RS485/232: Programmable (removable terminal block included)	
Data Logging/Project Transfer	microSD card slot	
Hardware Limits of System	**9 Base Groups:** 1 Local (CPU) + 8 Remote (P2-RS and/or P1-RX) + 4 PS-AMC 4,320 Hardware I/O points (All 32 point modules)	
Instruction Types	Application Functions Array Functions Counters/Timers Communications Data Handling Drum Sequencers Math Functions	PID Program Control String Functions System Functions Contacts Coils Motion Control
Real Time Clock Accuracy	±2s per day typical at 25°C ±10s per day maximum at 60°C	

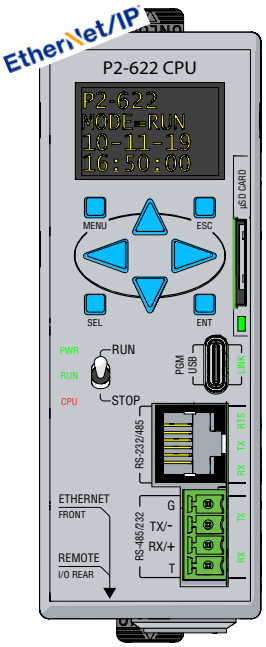

IMPORTANT!

Hot-Swapping Information

NOTE: This device cannot be Hot Swapped.

General Specifications

Operating Temperature	0° to 60°C (32° to 140°F)
Storage Temperature	-20° to 70°C (-4° to 158°F)
Humidity	5 to 95% (non-condensing)
Environmental Air	No corrosive gases permitted
Vibration	IEC60068-2-6 (Test Fc)
Shock	IEC60068-2-27 (Test Ea)
Heat Dissipation	3.81 W
Enclosure Type	Open equipment
Module Location	Controller slot in the local base in a Productivity®2000 system.
Weight	158g (5.6 oz)
Agency Approvals**	UL508 file E139594, Canada & USA CE (EN61131-2)*

*Meets EMC and Safety requirements. See the Declaration of Conformity for details.
**To obtain the most current agency approval information, see the Agency Approval Checklist section on the specific component part number web page.

P2-622 CPU Module

Port Specifications

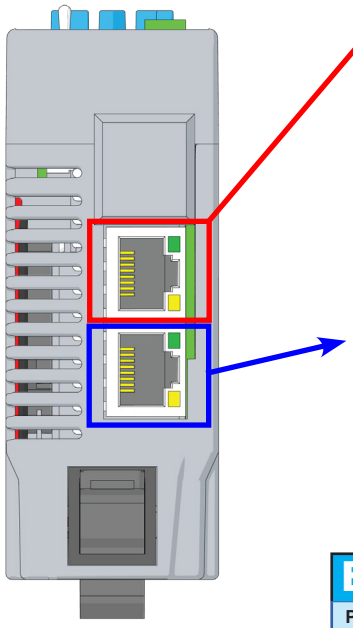

P2-622 Bottom View

Ethernet Port (On bottom of CPU)

RJ-45 style connector used for:

- Connection to a PC running the ProductivitySuite programming software
- Modbus TCP Client (32 Servers) connections (Modbus requests sent from the CPU)
- Modbus TCP Server (16 Clients) connections (Modbus requests received by the CPU)
- EtherNet/IP Scanner (32 Adaptors)
- EtherNet/IP Adapter (4 scanners) with 8 connections per device.
- Outgoing E-mail
- MQTT Client (4 brokers)

Remote I/O Port (RJ-45 style connector on bottom of CPU)

- Connection to a Remote I/O network of devices using the Productivity Remote Protocol, e.g. P2-RS, P1-RX, GS Drives, etc.
- Can be user defined and used as a secondary multipurpose ethernet port with the exception that this port does not have Default Gateway or DNS capability.

Ethernet Specifications

Port Name	ETHERNET	REMOTE I/O
Description	Standard transformer isolated Ethernet port with built-in surge protection for: • programming • online monitoring • firmware • MQTT • Email (SMTP client), • Modbus/TCP client/server connections (fixed IP or DHCP) • Ethernet/IP Scanner/Adapter connections.	Standard transformer-isolated Ethernet port with built-in surge protection for connection of: • ProtosX remote I/O, • P2-RS and P1-RX remote slaves, • GS Drives with optional communication modules, • and/or PS-AMC modules • Can be configured as a Secondary multipurpose Ethernet port
Transfer Rate	RJ45 Yellow LED Off = 10Mbps / On = 100 Mbps	
Port Status LED	RJ45 Green LED Solid when network LINK is established. Flashes when port is active (ACT)).	

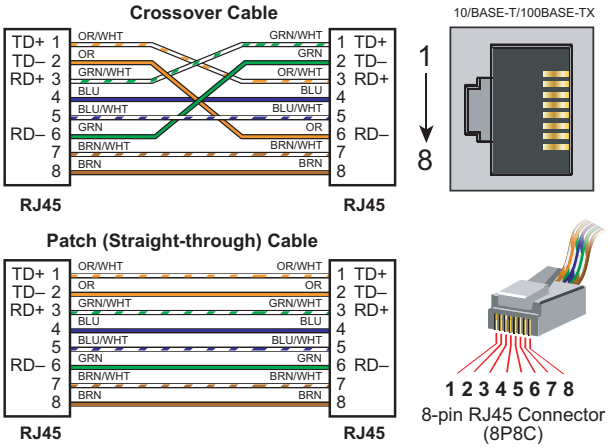

P2-622 CPU Module

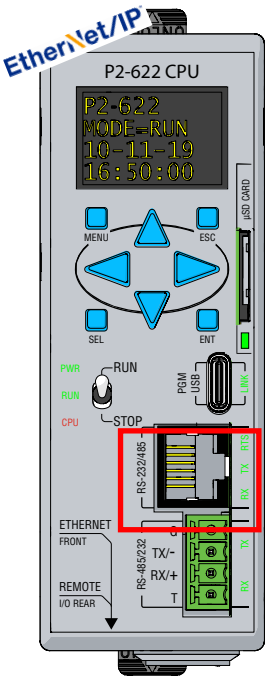

RS-232/485 Port

The P2-622 CPU includes an RJ-12 style connector and a 4-position terminal block connector that may each be programmed for RS232 or RS485 connections. These ports may be used for:

- Modbus RTU Master connections
- Modbus RTU Slave connections
- ASCII full or half duplex communications
- Custom Protocol Incoming and Outgoing communications

RS-232 Specifications	
TXD	RS-232 Transmit output
RXD	RS-232 Receive input
RTS	Handshaking output for modem control
GND	Logic ground
Maximum Output Load (TXD/ RTS)	3kΩ, 1000 pf
Minimum Output Voltage Swing	±5V
Output Short Circuit Protection	±15mA

RJ12 Connector	
Description	Programmable RS232/485 Port - Non-isolated RS-232 DTE port connects the CPU as a Modbus/ASCII master or slave to a peripheral device. Includes ESD and built in surge protection - Non-isolated RS-485 port connects the CPU as a Modbus/ASCII master or slave to a peripheral device. Includes ESD/EFT protection and automatic echo cancellation when transmitter is active
Data Rates	Selectable, 1200, 2400, 4800, 9600, 19200, 33600, 38400, 57600, and 115200
+5V Cable Power	210mA maximum at 5V, ±5%. Reverse polarity and overload protected.
Port Status LED	Green LED illuminated when active for TXD, RXD and RTS
Cable Options	EA-MG-PGM-CBL D2-DSCBL USB-RS232-1 with D2-DSCBL FA-CABKIT FA-ISOCON for converting RS-232 to isolated RS-485

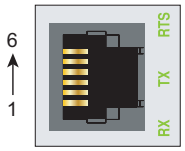

6-pin RJ12 Female Modular Connector

Pin #	RS232	RS485
6	GND	GND
5	RTS	
4	TXD	TXRX-
3	RXD	TXRX+
2	+5V, 210mA	Do no connect
1	GND	GND

P2-622 CPU Module

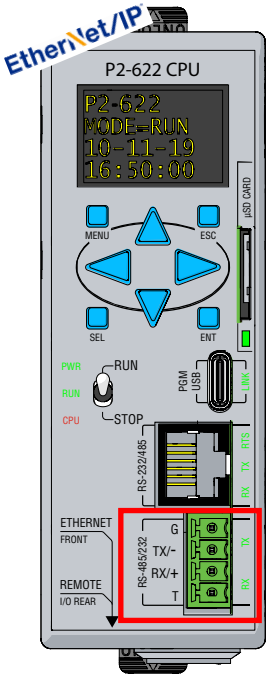

Removable connector included. Spare connectors available (part no. P3-RS485CON).

RS-485/232 Port

A 4-pin removable terminal block used for:

- Modbus RTU Master connections
- Modbus RTU Slave connections
- ASCII Incoming and Outgoing communications
- Custom Protocol Incoming and Outgoing communications

RS-485 Specifications	
Description	Programmable RS232/485 Port - Non-isolated RS-232 DTE port connects the CPU as a Modbus/ASCII master or slave to a peripheral device. Includes ESD and built in surge protection - Non-isolated RS-485 port connects the CPU as a Modbus/ASCII master or slave to a peripheral device. Includes ESD/EFT protection and automatic echo cancellation when transmitter is active
Data Rates	Selectable, 1200, 2400, 4800, 9600, 19200, 33600, 38400, 57600, and 115200
+5V Cable Power	210mA maximum at 5V, ±5%. Reverse polarity and overload protected
Port Status LED	Green LEDs illuminated when active for TXD, RXD and RTS
Cable Options	EA-MG-PGM-CBL D2-DSCBL USB-RS232-1 with D2-DSCBL FA-CABKIT FA-ISOCON for converting RS-232 to isolated RS-485

4 Position Terminal Block

4 Position Terminal Block	
Description	Programmable RS232/485 Port - Non-isolated RS-232 DTE port connects the CPU as a Modbus/ASCII master or slave to a peripheral device. Includes ESD and built in surge protection - Non-isolated RS-485 port connects the CPU as a Modbus/ASCII master or slave to a peripheral device. Includes ESD/EFT protection and automatic echo cancellation when transmitter is active
Data Rates	Selectable, 1200, 2400, 4800, 9600, 19200, 33600, 38400, 57600, and 115200
Port Status LED	Green LED illuminated when active for TXD and RXD
Cable Options	Go to AutomationDirect.com for RS-232 and RS-485 cables

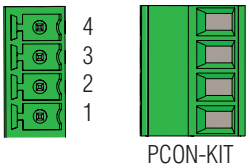

Pin #	RS232	RS485
4	GND	GND
3	TXD	TXRX-
2	RXD	TXRX+
1	Do not connect	TERMINATE

P2-622 CPU Module

Port Specifications

P2-622

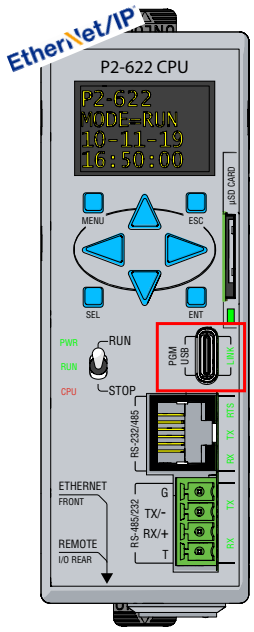

USB C Port

Used exclusively for connecting to a PC running the Productivity Suite programming software.

USB C Specifications	
Port Name	PGM USB
Description	Standard USB C Slave input for programming and online monitoring, with built-in surge protection. Not compatible with older full speed USB devices.
Transfer Rate	480 Mbps
Port Status LED	Green LED is illuminated when LINK is established to programming software.
Cables	USB Type A to USB Type C: 6ft cable part # USB-CBL-AC6

OLED Message Display

The P2-622 CPU incorporates a 4-line by 10-character OLED (Organic Light-Emitting Diode) display for system alarms, information and for displaying user-defined messages. Control buttons located beneath the OLED display allow the user to navigate through menu items. These buttons also permit local configuration of time and date settings.

User defined display messages may be configured using the Productivity Suite Programming Software. A "Display Page" dialog box allows the user to program text into user-defined tags that will be displayed based on the programmed ladder execution.

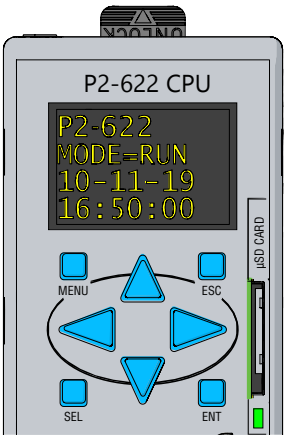

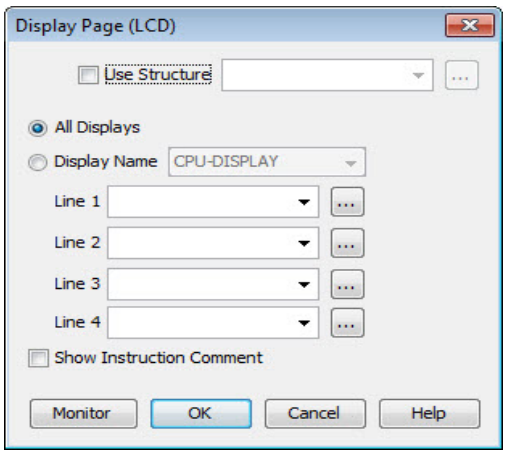

OLED Control Buttons	
Menu Button	Access the OLED menu
ESC Button	Returns to the previous screen
SEL Button	Selects the desired menu option
ENT Button	Starts the selected process
Directional Arrows	Moves the cursor around the 4 Row x 10 Column OLED

P2-622 CPU Module

CPU Installation

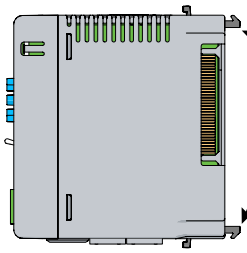

Step One:
Unlock both locking tabs

WARNING: Do not apply field power until the following steps are completed. .

Step Two:
Seat CPU on support platform and push towards base until circuit board is fully engaged into connector

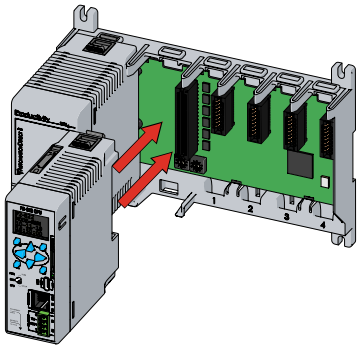

Step Three:
Snap retaining tab into the locked position.

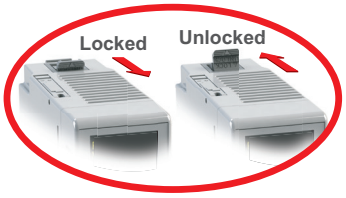

WARNING: Explosion hazard – Do not connect or disconnect or operate switches while circuit is live unless the area is known to be non-hazardous. Do not hot-swap modules unless the area is known to be non-hazardous.

CPU Module Accessories

D2-BAT-1 $9.75

Battery (Replacement)

Both P2-622 and P2-550 CPUs have a battery compartment located on the top of the CPU. A battery may be shipped with some CPU modules, but is not installed. The battery can be installed to retain the Time and Date along with any Tagname values that are set up as retentive. The battery is not needed for program backup.

Battery (Optional)	
D2-BAT-1	Coin type, 3.0 V Lithium battery, 560mA, battery number CR2354

Note: Although not needed for program backup, a battery may be included with some CPUs. Install this battery if you want the CPU to retain the Time and Date along with any Tagname values that you have set up as retentive.

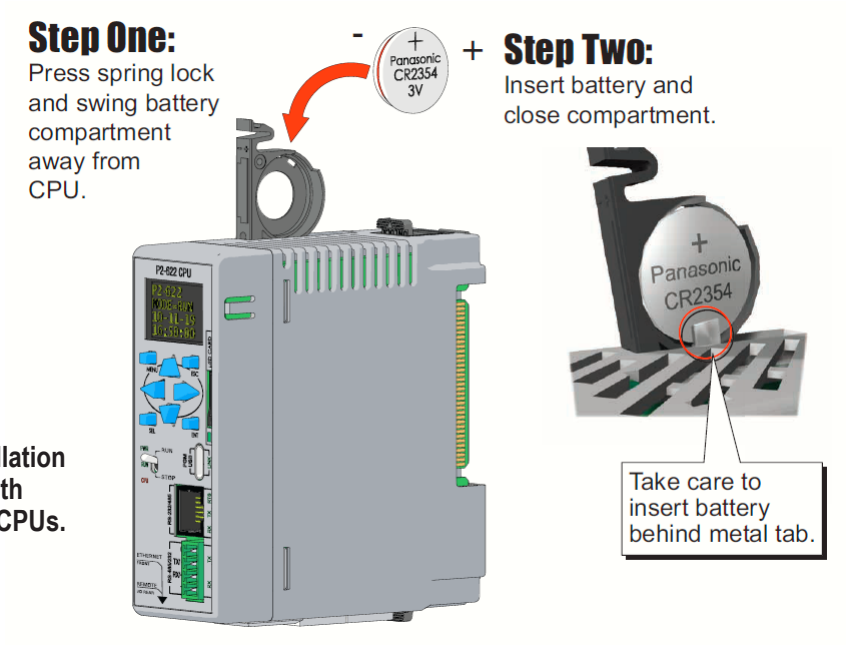

The battery installation steps apply to both P2-622 & P2-550 CPUs.

MICSD-16G $39.00

microSD Card

Both P2-622 and P2-550 CPUs support data logging or project transfers when employing upto a 32G microSD card. The card can be inserted in the microSD slot located on the right front face of each CPU. AutomationDirect offers the MICSD-16G card that can store upto 16 gigabytes of data.

Micro SD Specifications*	
Description	Standard microSD Card for data logging or project transfer. Supports wear leveling to maximize data endurance.
Maximum Card Capacity	32GB
Performance (SanDisk micro SDHC Class 4 memory card)	Speeds up to 20MB/s read and 5MB/s write.
Operating Temperature	-25 to 85°C (-13 to 185°F)
Speed Class	Class 4 (4 Mbps)

**Note: Card not included with unit.*

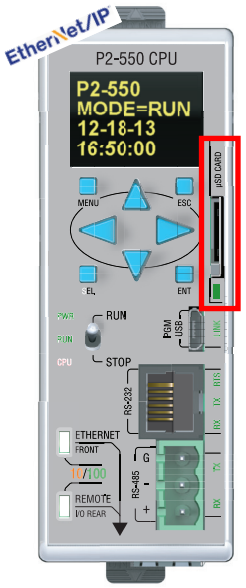

P2-550 CPU

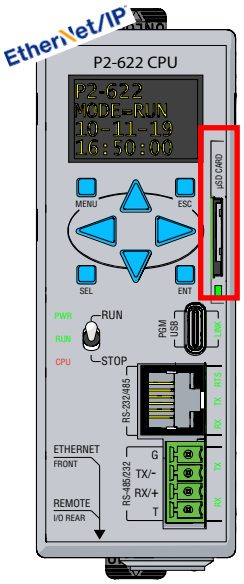

P2-622 CPU

P2-550 CPU Module

P2-550 $365.00

The P2-550 is a high-performance CPU which has communications ports that support Ethernet and serial devices. The P2-550 also includes a 4-line x 10-character OLED local display and a USB programming port.

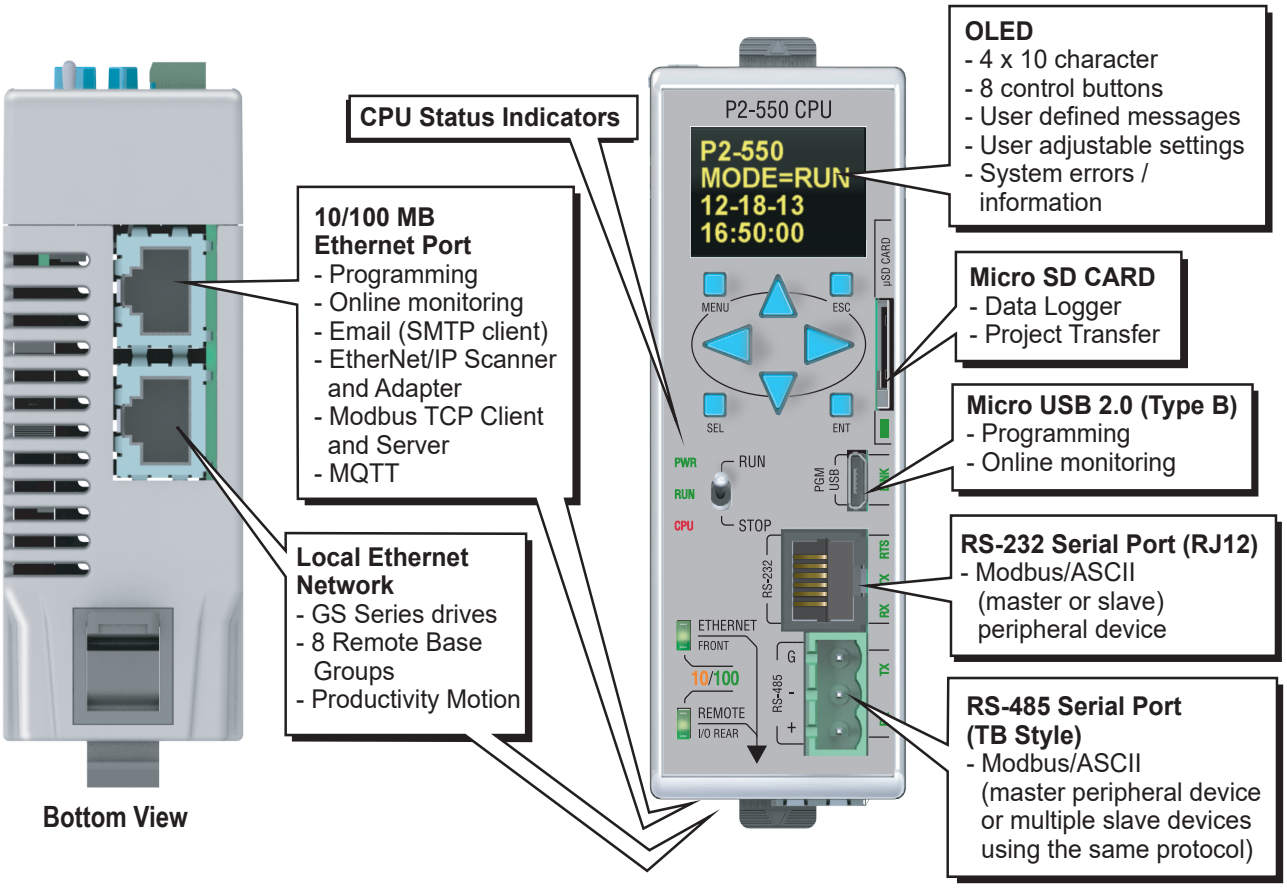

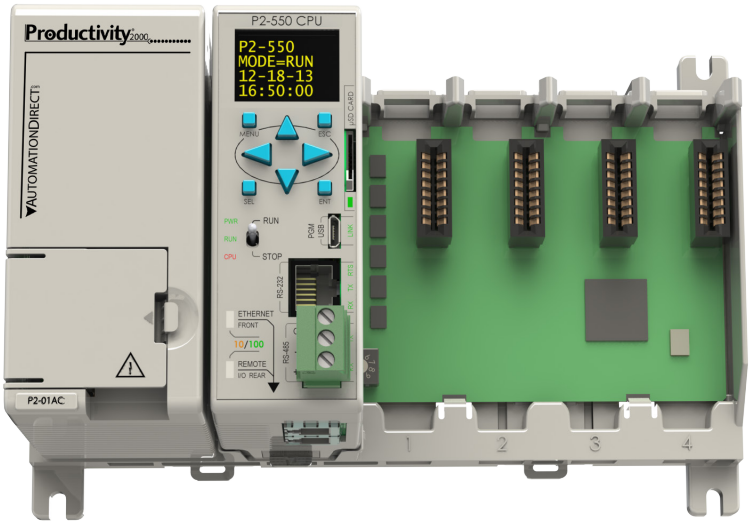

Each Productivity2000 system base requires a CPU module be mounted in the controller slot of the unit. The CPU stores and executes the user's program.

P2-550 CPU Module

CPU Run/Stop Switch	
RUN position	Executes user program, run-time edits possible
STOP position	Does not execute user program, normal program load position

CPU Status Indicators	
PWR	Green LED is illuminated when power is ON
RUN	Green LED is illuminated when CPU is in RUN mode
CPU	Red LED is illuminated during power ON reset or power down.

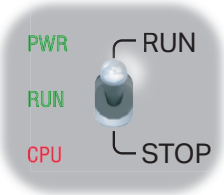

CPU Specifications		
User Memory	50MB (Includes program, data and documentation)	
Memory Type	Flash and Battery Backed RAM	
Retentive Memory	500kB	
Scan Time	500µs (3K Boolean, 240 I/O)	
Display	OLED, 4x10 characters, 8 control buttons	
Communications; 5 Integrated Ports	**USB:** Programming, Monitoring, Debug, Firmware **ETHERNET:** (10/100 Mbps Ethernet) Programming, Monitoring, Debug, Firmware, Email SMTP Client, MQTT, Modbus TCP Client (32 Servers) and Server (16 Clients), EtherNet/IP Scanner (32 Adapters) and Adapter (4 scanners) with 8 connections per device. **REMOTE I/O:** 16 GS series drives, 8 Remote Base Groups, 4 ProtosX TCP couplers, 4 PS-AMC modules **RS-232:** (RJ12, 1200–115.2k baud) ASCII, Modbus **RS-485:** Removable Terminal Included, (1200–115.2k baud) ASCII, Modbus RTU	
Data Logging/ Project Transfer	Micro SD card slot	
Hardware Limits of System	9 Base Groups: 1 Local (P2-550) + 8 Remote (P2-RS and/ or P1-RX) + 4 ProtosX TCP couplers + 4 PS-AMC 4,320 Hardware I/O points (All 32-point modules)	
Instruction Types	Application Functions Array Functions Counters/Timers Communications Data Handling Drum Sequencers Math Functions	PID Program Control String Functions System Functions Contacts Coils Motion Control
Real Time Clock Accuracy	±5s per day typical at 25°C -15s per day maximum at 60°C	

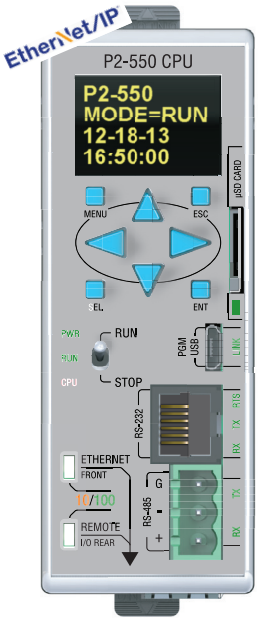

IMPORTANT!

Hot-Swapping Information
NOTE: This device cannot be Hot Swapped.

P2-550 CPU Module

Specifications

General Specifications	
Operating Temperature	0° to 60°C (32° to 140°F)
Storage Temperature	-20° to 70°C (-4° to 158°F)
Humidity	5 to 95% (non-condensing)
Altitude	2,000 meters, max.
Pollution Degree	2
Environmental Air	No corrosive gases permitted
Vibration	IEC60068-2-6 (Test Fc)
Shock	IEC60068-2-27 (Test Ea)
Heat Dissipation	3.81 W
Overvoltage Category	II
Enclosure Type	Open equipment
Module Location	Controller slot in the local base in a Productivity®2000 system.
Weight	158g (5.6 oz)
Agency Approvals*	UL 61010-1 and UL 61010-2-201 File E139594, Canada and USA CE (EN 61131-2 EMC, EN 61010-1 and EN 61010-2-201 Safety)*

*Meets EMC and Safety requirements. See the Declaration of Conformity for details.
**To obtain the most current agency approval information, see the Agency Approval Checklist section on the specific component part number web page.

OLED Message Display

The P2-550 CPU incorporates a 4-line by 10-character OLED (Organic Light-Emitting Diode) display for system alarms, information and for displaying user-defined messages.

Control buttons located beneath the OLED display allow the user to navigate through menu items. These buttons also permit local configuration of time and date settings.

User defined display messages may be configured using the Productivity Suite Programming Software. A "Display Page" dialog box allows the user to program text into user-defined tags that will be displayed based on the programmed ladder execution.

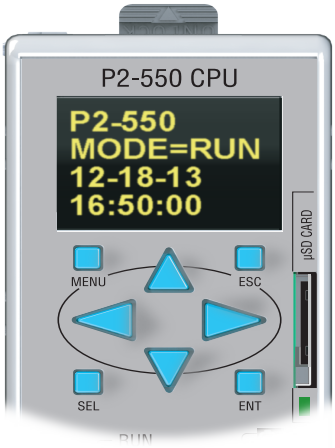

OLED Control Buttons	
Menu Button	Access the OLED menu
ESC Button	Returns to the previous screen
SEL Button	Selects the desired menu option
ENT Button	Starts the selected process
Directional Arrows	Moves the cursor around the 4 Row x 10 Column OLED

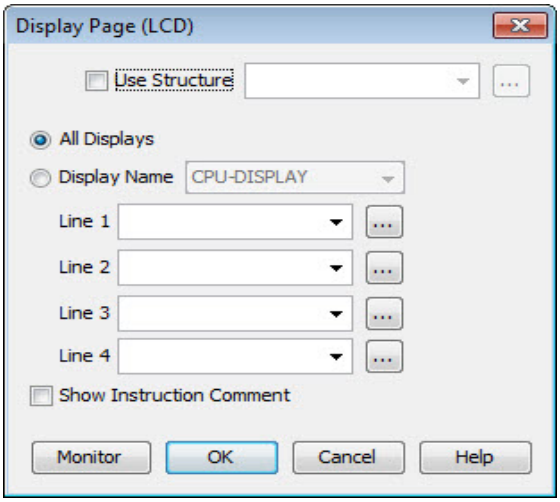

CPU Installation

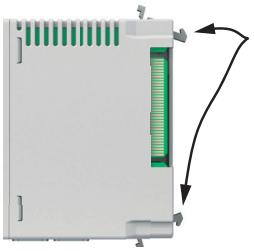

Step One:

Unlock both locking tabs

WARNING: ***DO NOT APPLY FIELD POWER UNTIL THE FOLLOWING STEPS ARE COMPLETED.***

Step Two:

Seat CPU on support platform and push towards base until circuit board is fully engaged into connector

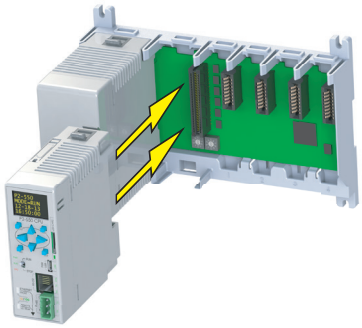

Step Three:

Snap retaining tab into the locked position.

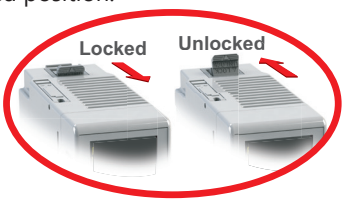

WARNING: ***EXPLOSION HAZARD – DO NOT CONNECT OR DISCONNECT OR OPERATE SWITCHES WHILE CIRCUIT IS LIVE UNLESS THE AREA IS KNOWN TO BE NON-HAZARDOUS. DO NOT HOT-SWAP MODULES UNLESS THE AREA IS KNOWN TO BE NON-HAZARDOUS.***

P2-550 CPU Module

Port Specifications

P2-550

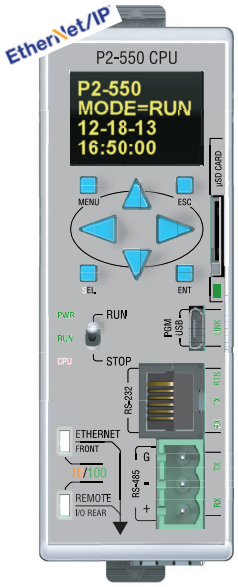

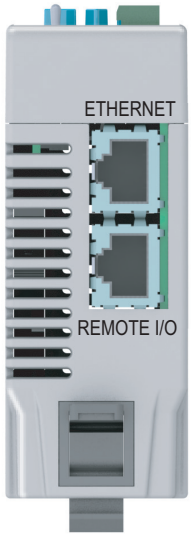

P2-550 Bottom View

Ethernet Port (On bottom of CPU)

RJ-45 style connector used for:

- Connection to a PC running the ProductivitySuite programming software
- Modbus TCP Client connections (Modbus requests sent from the CPU)
- Modbus TCP Server connections (Modbus requests received by the CPU)
- EtherNet/IP Scanner (32 Adaptors)
- EtherNet/IP Adapter (4 scanners) with 8 connections per device.
- Outgoing E-mail

Remote I/O Port (On bottom of CPU)

RJ-45 style connector used for connecting to a Remote I/O network consisting of GS-EDRV100 units connected to GS drives.

Ethernet Specifications		
Port Name	***ETHERNET***	***REMOTE I/O***
Description	Standard transformer isolated Ethernet port with built-in surge protection for programming, online monitoring, Email (SMTP client), Modbus/TCP client/ server connections (fixed IP or DHCP) and EtherNet/IP Scanner/Adapter connections.	Standard transformer isolated Ethernet port with built-in surge protection for connection to 16 GS series drives, 8 remote base groups, and 4 PS-AMC modules.
Transfer Rate	10 Mbps (Orange LED) and 100 Mbps (Green LED) (auto-crossover).	
Port Status LED	LED is solid when network LINK is established. LED flashes when port is active (ACT).	

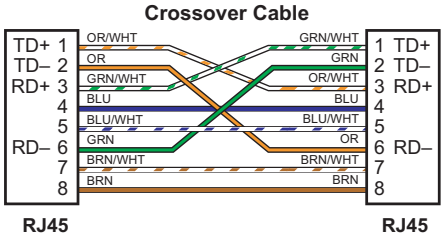

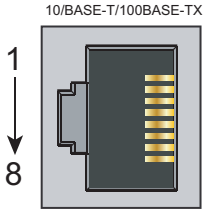

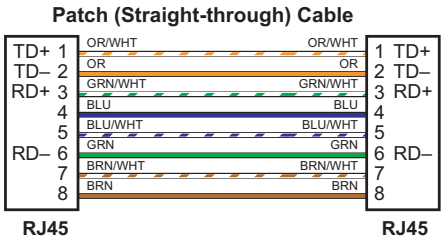

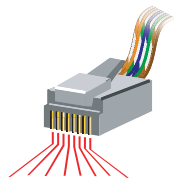

1 2 3 4 5 6 7 8

8-pin RJ45 Connector (8P8C)

P2-550 CPU Module

Port Specifications

P2-550

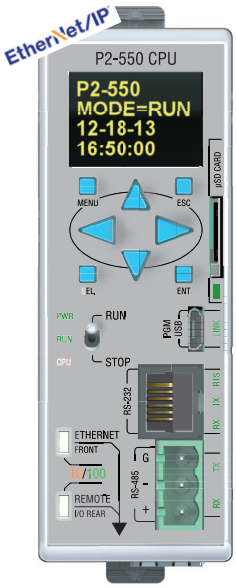

MICRO USB Programming Port

Used exclusively for connecting to a PC running the Productivity Suite programming software.

Micro USB Input Specifications	
Port Name	MICRO USB
Description	Standard Micro USB Slave input for programming and on-line monitoring, with built-in surge protection. Not compatible with older full speed USB devices.
Transfer Rate	480 Mbps
Port Status LED	Green LED is illuminated when LINK is established to programming software.
Cables	USB Type A to Micro USB Type B: 6ft cable part # USB-CBL-AMICB6 15ft cable part # USB-CBL-AMICB15

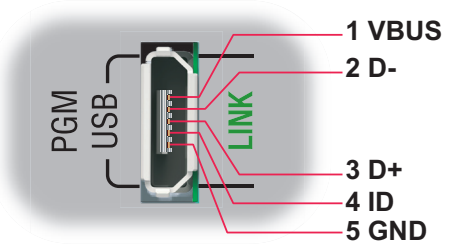

P2-550 CPU Module

P2-550

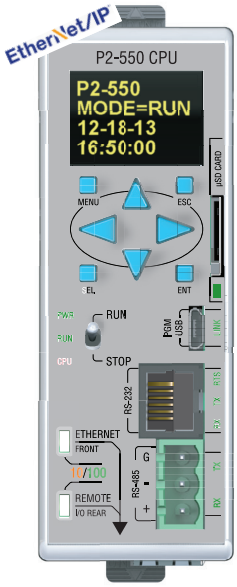

RS-232 Port

RJ-12 style connector used for:

- Modbus RTU Master connections
- Modbus RTU Slave connections
- ASCII full or half duplex communications
- Custom Protocol Incoming and Outgoing communications

RS-232 Specifications	
Port Name	RS-232
Description	Non-isolated RS-232 DTE port connects the CPU as a Modbus/ASCII master or slave to a peripheral device. Includes ESD and built-in surge protection
Data Rates	Selectable,1200, 2400, 4800, 9600, 19200, 33600, 38400, 57600, and 115200 baud
+5V Cable Power Source	210mA maximum at 5V, ±5%. Reverse polarity and overload protected
TXD	RS-232 Transmit output
RXD	RS-232 Receive input
RTS	Handshaking output for modem control
GND	Logic ground
Maximum Output Load (TXD/RTS)	3kΩ, 1000pf
Minimum Output Voltage Swing	±5V
Output Short Circuit Protection	±15mA
Port Status LED	Green LED is illuminated when active for TXD, RXD and RTS
Cable Options	EA-MG-PGM-CBL D2-DSCBL USB-RS232-1 with D2-DSCBL FA-CABKIT FA-ISOCON for converting RS-232 to isolated RS-485

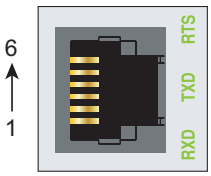

6-pin RJ12 Female Modular Connector

Pin #	Signal	
6	GND	Logic Ground
5	RTS	RS-232 Output
4	TXD	RS-232 Output
3	RXD	RS-232 Input
2	+5V	210mA Maximum
1	GND	Logic Ground

P2-550 CPU Module

P2-550

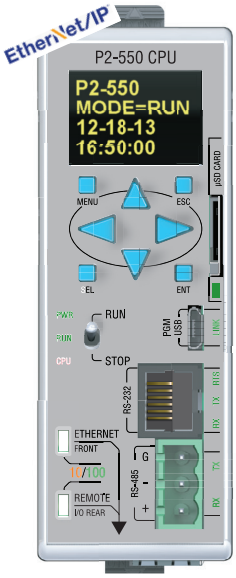

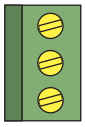

Removable connector included. Spare connectors available (part no. P3-RS485CON).

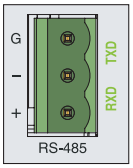

Pin #	Signal
G	GND
–	TXD-/RXD-
+	TXD+/RXD+

RS-485 Port

A 3-pin removable terminal block used for:

- Modbus RTU Master connections
- Modbus RTU Slave connections
- ASCII Incoming and Outgoing communications
- Custom Protocol Incoming and Outgoing communication

RS-485 Port Specifications	
Port Name	RS-485
Description	Non-isolated RS-485 port connects the CPU as a Modbus/ASCII master or slave to a peripheral device. Includes ESD/EFT protection and automatic echo cancellation when transmitter is active
Data Rates	Selectable, 1200, 2400, 4800, 9600, 19200, 33600, 38400, 57600, and 115200
TXD+/RXD+	RS-485 transceiver high
TXD-/RXD-	RS-485 transceiver low
GND	Logic ground
Input Impedance	19kΩ
Maximum Load	50 transceivers, 19kΩ each, 60Ω termination
Output Short Circuit Protection	±250mA, thermal shut-down protection
Electrostatic Discharge Protection	Contact ±4kV, Air 8kV per IEC1000-4-2 Cable is installed for testing.
Electrical Fast Transient Protection	±1kV per IEC1000-4-4
Minimum Differential Output Voltage	1.5 V with 60Ω load
Fail Safe Inputs	Logic high input state if inputs are unconnected
Maximum Common Mode Voltage	-7.5 V to 12.5 V
Port Status LED	Green LED illuminated when active for TXD and RXD
Cable Options	Go to www.AutomationDirect.com for RS-485 cables

Removable Terminal Block Specifications	
Part Number	P3-RS485CON
Number of Positions	3 Screw Terminals
Pitch	5mm
Wire Range	28–12 AWG Solid Conductor 30–12 AWG Stranded Conductor
Screw Driver Width	1/8 inch (3.175 mm) maximum
Screw Size	M2.5
Screw Torque	4.5 lb·in (0.51 N·m)

P2-SCM Serial Communication Module

P2-SCM $242.00

Serial Communications Module
Productivity® 2000 serial communications module provides three RS-232 ports and one RS-485 port. This configuration allows Modbus master/slave networking or connection to serial devices using ASCII or custom communication protocols.

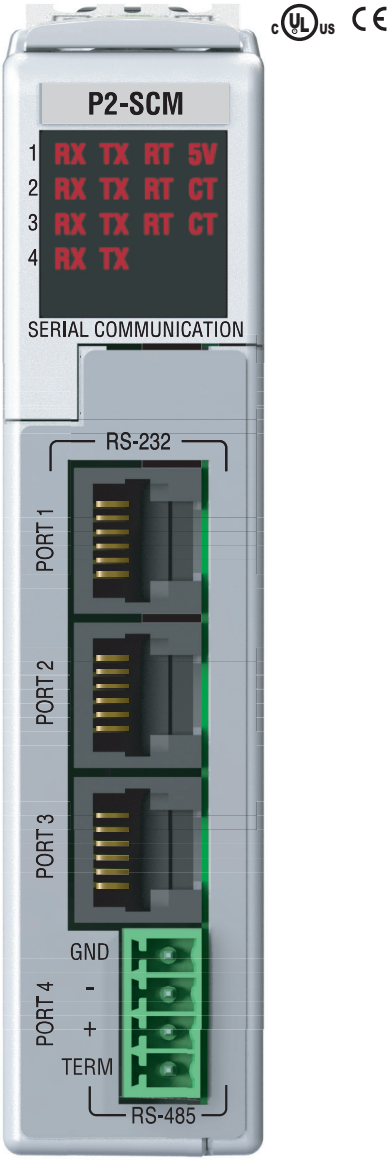

General Specifications	
Module Type	Intelligent
Modules per Basew	15 maximum (See Note)
I/O Points Used	None, mapped directly to tags in CPU
Field Wiring Connector	3 - RJ12, 1 - 4 Position Terminal Block
Operating Temperature	0º to 60ºC (32º to 140ºF)
Storage Temperature	-20º to 70ºC (-4º to 158ºF)
Humidity	5 to 95% (non-condensing)
Environmental Air	No corrosive gases permitted
Vibration	IEC 60068-2-6 (Test Fc)
Shock	IEC 60068-2-27 (Test Ea)
Field to Logic Side Isolation	None
Insulation Resistance	No isolation
Module Location	Any slot in any base in a Productivity2000 system
Weight	90g (3.2 oz)
Agency Approvals*	UL508 File E139594, Canada & USA CE (EN61131-2007)*

**Meets EMC and Safety requirements. See the Declaration of Conformity for details.*
***To obtain the most current agency approval information, see the Agency Approval Checklist section on the specific component part number web page.*

Removable Terminal Block Specifications	
Number of Positions	4 Screw Terminals, 3.5mm pitch
Wire Range	16–28 AWG Solid/Stranded Conductor "Use copper conductors, 75°C or equivalent"
Screwdriver Size	TW-SD-VSL-1 (recommended)
Screw Torque	0.4 N·m

Removable Terminal Connector included. Spare connectors available (part no. P3-RS485CON-1).

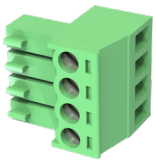

RS-485 Cable Options	
Recommended	Q8302-1 (cut to lenght) or Beldon #9841 equivalent.

P2-SCM Serial Communication Module

Diagnostic LEDs				
LED	Port 1	Port 2	Port 3	Port 4
RXD	X	X	X	X
TXD	X	X	X	X
RTS	X	X	X	
CTS		X	X	
5V	X			

1. *All RS232 & RS485 LED's reflect the actual electrical level of the signal; there is no direct firmware control of LED's.*
2. *RS232 LED's RXD, TXD, RTS & CTS are turned ON when the voltage on the RS232 wire is positive:*
   a. - This occurs when the UART I/O signal is low (GND).
   b. - They are turned OFF when the voltage on the RS232 wire is negative.
3. *RS485 LED's RXD & TXD are turned ON when the UART I/O signal is low (GND).*
4. *5V LED is ON when 5V power is good, 5V LED is OFF when 5V is shorted to ground.*

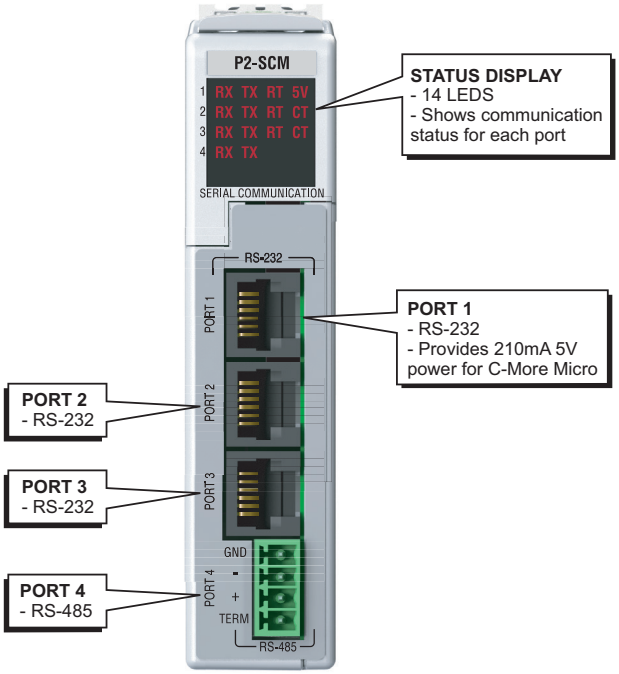

P2-SCM Configuration Options			
Configuration Item	Port 1 (RS-232)	Ports 2 & 3 (RS-232)	Port 4 (RS-485)
Protocol Selections	Disabled, Modbus RTU, ASCII/Custom	Disabled, Modbus RTU, ASCII/Custom	Disabled, Modbus RTU, ASCII/Custom
Data Rate	1200, 2400, 4800, 9600, 19200, 33600, 38400 baud	1200, 2400, 4800, 9600, 19200, 33600, 38400 baud	1200, 2400, 4800, 9600, 19200, 33600, 38400 baud
Parity	None, Odd or Even	None, Odd or Even	None, Odd or Even
Data Bits4	7 or 8 bits	7 or 8 bits	7 or 8 bits
RTS Off Delay Time1	None, or 0–5000 ms	None, or 0–5000 ms	N/A
RTS On Delay Time1	None, or 0–5000 ms	None, or 0–5000 ms	N/A
Modbus Character Timeout2	None, or 0–10000 ms	None, or 0–10000 ms	None, or 0–10000 ms
Communication Timeout (Timeout between query and response)	500–10500 ms	500–10500 ms	500–10500 ms
Response/Request Delay Time	N/A	N/A	None, or 1–5000 ms
Comm Heartbeat Value2	2–1000 sec	2–1000 sec	2–1000 sec
Node Address (Station)	1 to 247	1 to 247	1 to 247
CTS	N/A	Ignore, Wait, System Input3	N/A
Enable/Disable CTS Wait Timeout	1–9999 tenths of seconds	1–9999 tenths of seconds	N/A
RTS	On, Off, Assert During Transmit, System Output	On, Off, Assert During Transmit, System Output	N/A
RS-485 2-Wire Mode	N/A	N/A	Disable, Enable
Modbus Port Security	Read/Write, Read Only	Read/Write, Read Only	Read/Write, Read Only

1. *For "None" selection with Modbus RTU protocol, www.modbus.org minimums are used. This minimum is 3.5 character times up to 19,200 baud rate and 1.75 ms over 19200 baud rate.*
2. *Only applies to Modbus messages.*
3. *CTS signal is only provided on Ports 2 & 3.*
4. *7-bit data are only supported with Odd or Even parity.*

P2-SCM Serial Communication Module

Serial Port 1	
Port Type	RS-232
Description	Non-isolated RS-232 DTE port connects the CPU as a Modbus/ASCII master or slave to a peripheral device. Includes ESD and built-in surge protection.
Data Rates	Selectable, 1200, 2400, 4800, 9600, 19200, 33600, and 38400
+5V Cable Power Source	210mA maximum at 5V, ±5%. Reverse polarity and overload protected
TXD	RS-232 Transmit output
RX	RS-232 Receive input
RTS	Handshaking output for modem control
GND	Logic ground
Maximum Output Load (TXD/RTS)	3kΩ, 1000pF
Minimum Output Voltage Swing	±5V
Output Short Circuit Protection	±15mA
Port Status LED	Red LED is illuminated when active for TXD, RXD and RTS
Cable Options	EA-MG-PGM-CBL D2-DSCBL USB-RS232-1 with D2-DSCBL FA-CABKIT FA-ISOCON for converting RS-232 to isolated RS-485

Port 1

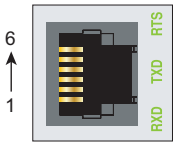

6-pin RJ12 Female Modular Connector

Pin #	Signal	
6	GND	Logic Ground
5	RTS	RS-232 Output
4	TXD	RS-232 Output
3	RXD	RS-232 Input
2	+5V	210mA Maximum
1	GND	Logic Ground

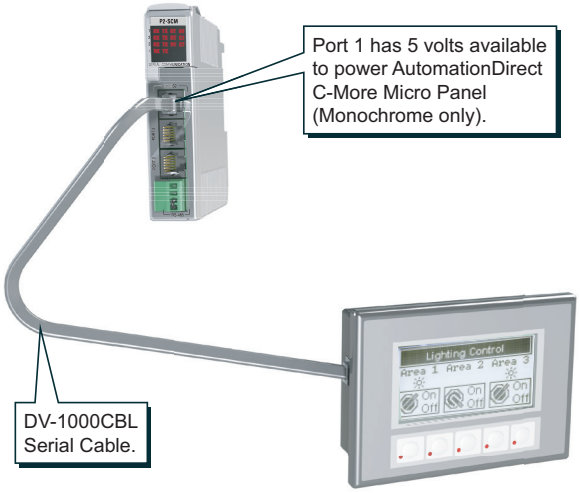

Ports 2, and 3

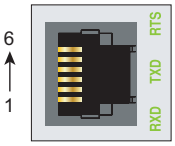

6-pin RJ12 Female Modular Connector

Pin #	Signal	
6	GND	Logic Ground
5	RTS	RS-232 Output
4	TXD	RS-232 Output
3	RXD	RS-232 Input
2	CTS	RS-232 Input
1	GND	Logic Ground

Serial Port 2 and 3	
Port Type	RS-232
Description	Non-isolated RS-232 DTE port connects the CPU as a Modbus/ASCII master or slave to a peripheral device. Includes ESD and built-in surge protection.
Data Rates	Selectable, 1200, 2400, 4800, 9600, 19200, 33600, and 38400
TXD	RS-232 Transmit output
RX	RS-232 Receive input
RTS	Handshaking output for modem control
GND	Logic ground
Maximum Output Load (TXD/RTS)	3kΩ, 1,000pF
Minimum Output Voltage Swing	±5V
Output Short Circuit Protection	±15mA
Port Status LED	Red LED is illuminated when active for TXD, RXD and RTS
Cable Options	D2-DSCBL USB-RS232-1 with D2-DSCBL FA-CABKIT FA-ISOCON for converting RS-232 to isolated RS-485

RS-232 Ports 1, 2 & 3				
Electrical Specifications	Min	Typ	Max	Units
Output ON, Space Condition (3kΩ, 1000pF Load)	5.0	5.2	N/A	Volts
Output OFF, Mark Condition (3kΩ, 1000pF Load)	N/A	-5.2	-5.0	Volts
Output Short-Circuit Current		15	N/A	mA
Short-Circuit Duration		N/A	No Limit	Seconds
Output Resistance	300		N/A	Ohm
Input ON Threshold	N/A	1.6	2.4	Volt
Input OFF Threshold	0.6	1.2	N/A	Volt
Input Resistance	3k	5k	7k	Ohm

Line Specifications for RS-232 Ports		
RS-232 Line Specifications	Options	Units
Data Rate Setting	1200, 2400, 4800, 9600, 19200, 33600, 38400	Baud
Data Rate Error	±2	%
Data Bits Setting1	7 or 8	Bits
Stop Bits Setting	1	Bits
Parity Setting	None1, Odd or Even	Parity
Data Transmission	Half duplex or full duplex	N/A
Network	Point-to-Point	

1. 7-bit data are only supported with odd or even parity.

P2-SCM Serial Communication Module

Port 4	
Port Type	RS-485
Description	Non-isolated RS-485 port connects the CPU as a Modbus/ASCII master or slave to a peripheral device. Includes ESD/EFT protection and automatic echo cancellation when transmitter is active.
Data Rates	Selectable, 1200, 2400, 4800, 9600, 19200, 33600, 38400 baud
TXD+/RXD	RS-485 transceiver high
TXD-/RXD-	RS-485 transceiver low
GND	Logic Ground
Input Impedance	19kΩ
Maximum Load	50 transceivers, 19kΩ each, 60Ω termination
Output Short Circuit Protection	±250mA, thermal shut-down protection
Electrostatic Discharge Protection	±8kV per IEC1000-4-2
Electrical Fast Transient Protection	±2kV per IEC1000-4-4
Minimum Differential Output Voltage	1.5 V with 60Ω load
Fail Safe Inputs	Logic high input state if inputs are unconnected
Maximum Common Mode Voltage	-7.5 V to 12.5 V
Port Status LED	RED LED Illuminated when active for TXD and RXD
Cable Options	Recommend ADC #Q8302-1 (cut to length)

Port 4

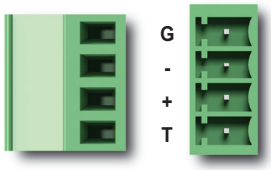

RS-485

Pin #	Signal
G	GND
–	TXD-/RXD-
+	TXD+/RXD+
T	TERMINATION

Line Specifications for RS-485 Port		
RS-485 Line Specifications	Options	Units
Data Rate Setting	1200, 2400, 4800, 9600, 19200, 33600, 38400	Baud
Data Bits Setting[1]	7 or 8	Bits
Stop Bits Setting	1	Bits
Parity Setting	None[1], Odd or Even	Parity
Data Transmission	Half duplex	N/A

1. 7-bit data is only supported with odd or even parity.

Port 4				
Electrical Specifications	Min	Typ	Max	Units
Driver Differential Output (54Ω Load)	1.5	N/A	N/A	Volts
Driver Common-Mode Output	N/A		3	Volts
Driver Short-Circuit Output Current			250	mA
Short-Circuit Duration (Thermal Shutdown)			No Limit	Seconds
Receiver Differential Input Threshold	200		N/A	mV
Receiver Common-Mode Input	-7		12	Volt
Input Resistance	12k		N/A	Ohm
Termination Resistance (TB Jumper wire 'T' to '+')	N/A	120		Ohm
Data Rate	1200	N/A	38400	Baud
Data Rate Error	N/A		±2	%
Cable Length (38400 baud maximum)			1200	Meter

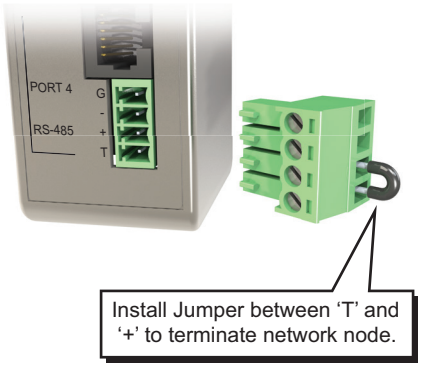

** Jumper not included*

Remote Slave Module

P2-RS $332.00

The P2-RS is a full featured, high-performance, Remote Slave module for use with the Productivity2000 Programmable Controller system. The module has an RJ45 Ethernet Remote I/O port with two communications ports which support serial devices. An additional Micro USB IN (type B) port for remote CPU programming and monitoring. The P2-RS also includes a 4 line x 10 character backlit OLED display.

Up to 8 Remote Slaves can be connected to a single CPU for a remote I/O network.

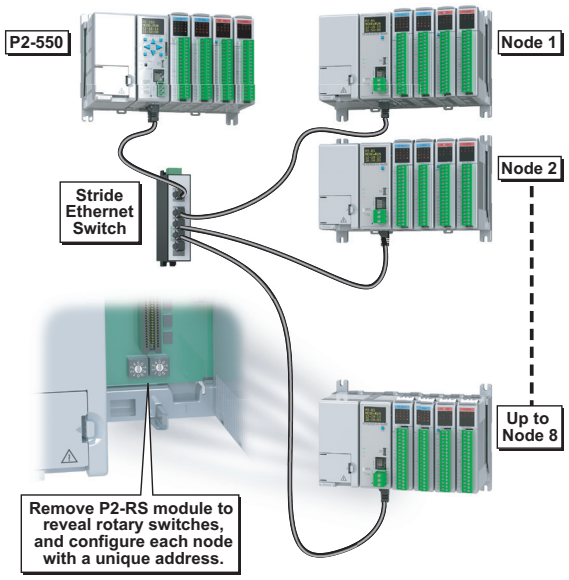

Add up to 8 Remote Bases using P2-RS Slave modules and up to 16 GS Drives on the Remote I/O Ethernet Network

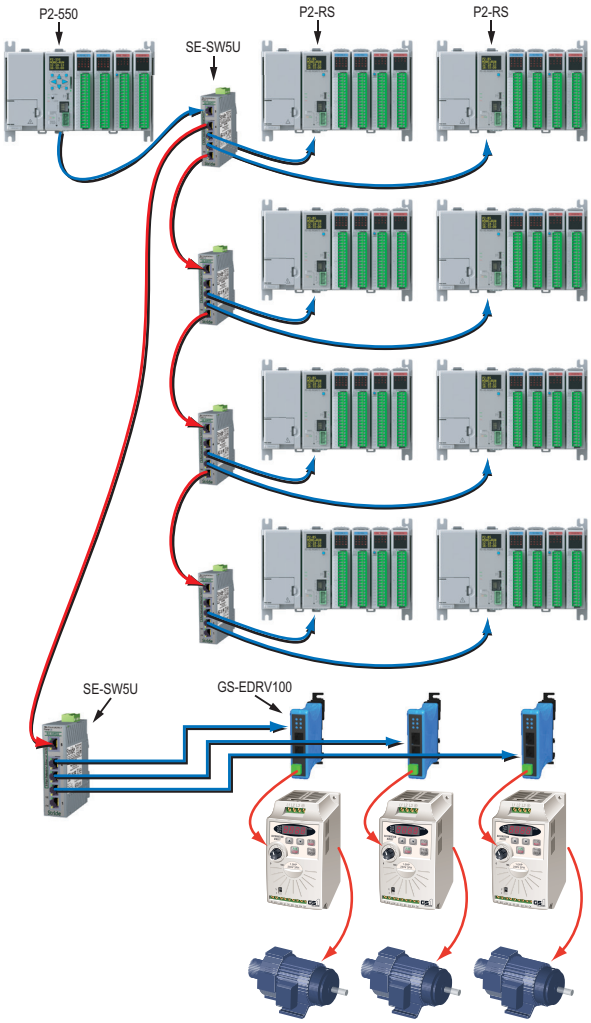

Remote Slave Module

Remote Slave Specifications	
Mounting Location	Controller slot in remote base
Display	OLED, 4x10 characters, backlit, 1 OLED wake up button, OLED characters are 7x12 with a dot pitch of 0.245 mm; 1.7 mm x 2.94 mm
Communications	USB: Programming, Monitoring, Debug REMOTE I/O: (10/100 Mbps Ethernet) RS-232: (RJ12, 1200-115.2k baud) ASCII, Modbus RS-485: (Removable Terminal Included, 1200-115.2k baud) ASCII, Modbus
Max. Number of Ethernet Remote I/O Bases	8
Max. Number of I/O per CPU System	4,320 (CPU Base with 8 Remote I/O Bases with 15 32 point I/O modules per base).

General Specifications	
Operating Temperature	0° to 60°C (32° to 140°F)
Storage Temperature	-20° to 70°C (-4° to 158°F)
Humidity	5 to 95% (non-condensing)
Altitude	2,000 meters, max
Pollution Degree	2
Environmental Air	No corrosive gases permitted
Vibration	IEC60068-2-6 (Test Fc)
Shock	IEC60068-2-27 (Test Ea)
Heat Dissipation	3.81 W
Overvoltage Category	II
Enclosure Type	Open equipment
Module Location	Controller slot in a remote base in a Productivity2000 system
Weight	158g (5.6 oz)
Agency Approvals	UL 61010-1 and UL 61010-2-201 File E139594, Canada and USA CE (EN 61131-2 EMC, EN 61010-1 and EN 61010-2-201 Safety)*

**Meets EMC and Safety requirements. See the Declaration of Conformity for details.*
NOTE: When using a P2-RS module, use most recent software and CPU firmware version releases.

IMPORTANT!

Hot-Swap Information
NOTE: This device cannot be Hot Swapped.

Remote Slave Module

Front Panel

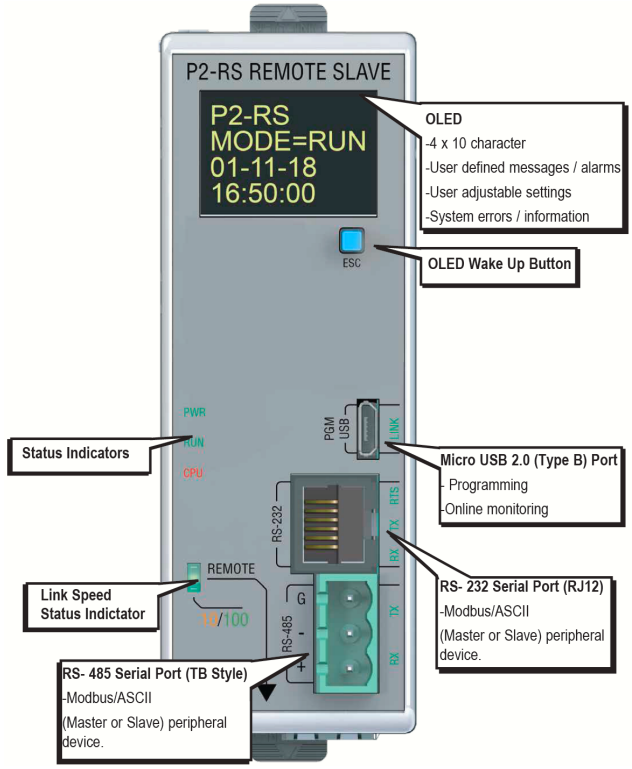

Status Indicators

RS Status Indicators	
PWR	Green LED is backlit when power is on
RUN	Green LED is backlit to indicate when CPU has valid project file with RS configured.
CPU	Red LED is backlit during power on reset, power down, or watch-dog time-out.

OLED Message Display

The P2-RS incorporates a 4 line x 10 character OLED for system errors and information or for displaying user-defined messages.

OLED characters are 7x12 with a dot pitch of 0.245 mm; 1.72 mm x 2.94 mm.

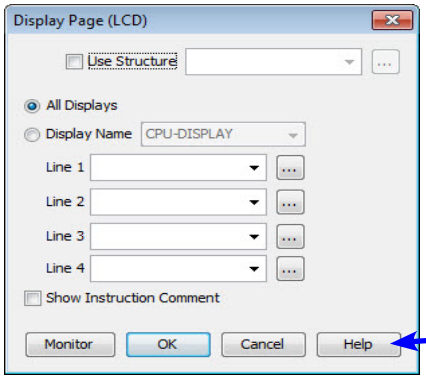

For user-defined messages, the display is configured using the Productivity Suite Programming Software. An LCD Page instruction allows the user to program text into user-defined tags and display the messages based on the ladder execution.

See the Productivity Suite Programming Software Help Files for complete details.

Remote Slave Module

Setting the Remote Slave Address

Each Remote Slave (P2-RS) must have a unique address between 1 and 99. The address is set using the two rotary switches located on the base of the module. The left dial is X10 for setting the tens units and the right dial is X1 for setting the ones unit.

For example, to set a remote slave address to 21, turn the X10 arrow until it points at number 2 and the X1 arrow until it points at number 1.

IMPORTANT NOTES:

- The factory setting of 00 is not a valid address for a Remote Slave.
- The address must be set prior to inserting P2-RS module in base unit.
- When using a P2-RS module, address selection must be set prior to power-up.
- Slave addresses are only read on power-up.
- If there are duplicate slave addresses on the same network, a critical error will occur.

It is also necessary to configure the remote addresses using the Productivity Suite Programming Software.

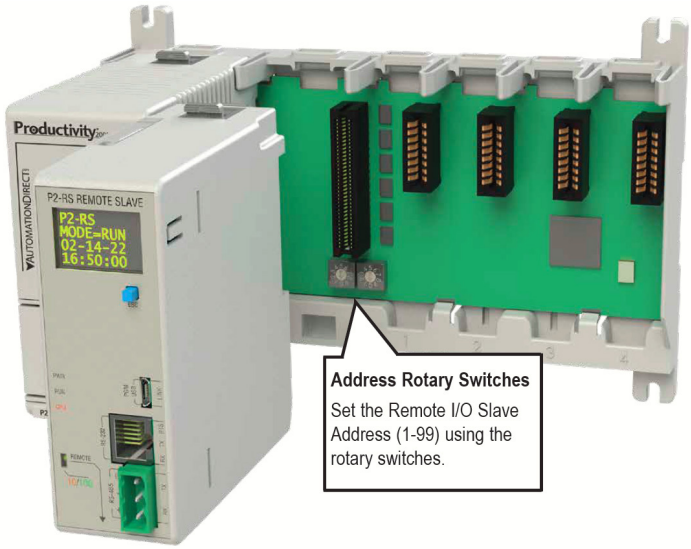

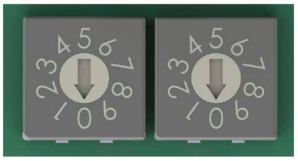

If setting up offline, go to Hardware Configuration,select the Base Chassis size needed (2), left click and drag the selected base to the Remote Base Group field (3). In the Add Remote Base Group (4) window, select the same Remote Base Number as set on the rotary switches.

If connected online with a Productivity2000 system that has slave modules installed, go to Hardware Configuration and select the Read Configuration (1) button. The CPU will automatically read the addresses of the remote slaves and add them to the configuration.

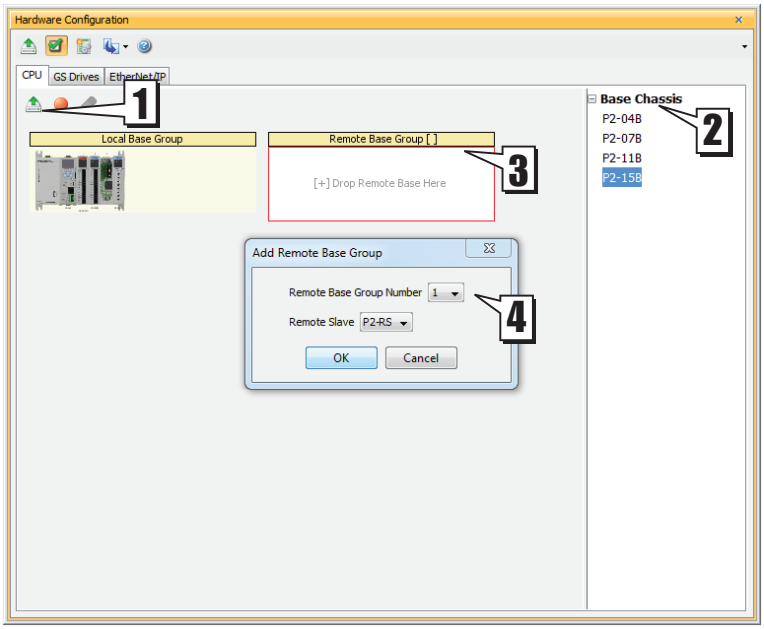

Remote Slave Module

Port Specifications

The P2-RS has several communications ports. The following pages have specifications and pin-out diagrams for these ports.

P2-RS

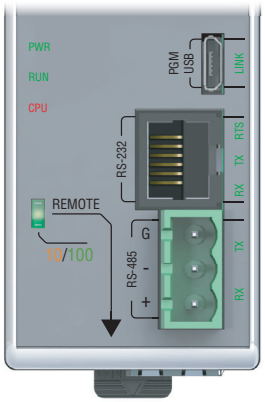

USB IN Port

A Micro USB 2.0 (Type B) Slave input for remote CPU programming and online monitoring, with built-in surge protection.

USB IN Specifications	
Description	Standard Micro USB 2.0 (Type B) Slave input for remote CPU programming and online monitoring, with built-in surge protection. Not compatible with older full speed USB devices.
Transfer Rate	480Mbps
Port Status LED	Green LED is illuminated when LINK is established to programming software.
Cables	Micro USB 2.0 (Type B) to USB Type A: 6ft cable part # USB-CBL-AMICB6 15ft cable part # USB-CBL-AMICB15

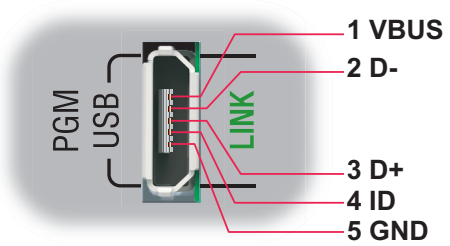

Remote I/O Port

Isolated Ethernet Port with built-in surge protection for connection to P2-550 CPU Remote I/O Master port.

Remote I/O Port Specifications	
Description	Proprietary transformer isolated Ethernet Port with built-in surge protection for connection to CPU Remote I/O Master port.
Transfer Rate	10/100 Mbps
Port Status LEDs	Green LED is illuminated when network LINK is established. Yellow LED backlit when port is active (ACT).
Cables	Auto cross-over port allows use of a Patch (straight through) cable.

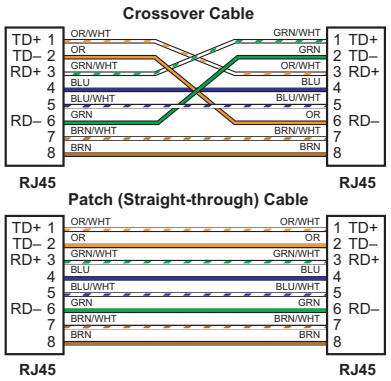

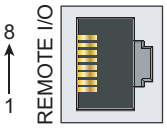

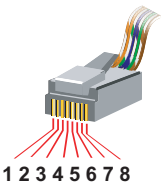

8-pin RJ45 Connector (8P8C)

Remote Slave Module

RS-232 Serial Port

Non-isolated RS-232 DTE port connects the P2-RS as a Modbus or ASCII master or slave to a peripheral device.

RS-232 Specifications	
Description	Non-isolated RS-232 DTE port connects the P2-RS as a Modbus or ASCII master or slave to a peripheral device. Includes ESD and built-in surge protection.
Data Rates	Selectable,1200, 2400, 9600, 19200, 33600, 38400, 57600, and 115200 bps.
+5V Cable Power Source	210mA maximum at 5V, ±5%. Limited by resettable fuse Reverse polarity protected.
TXD	RS-232 Transmit output
RXD	RS-232 Receive input
RTS	Handshaking output for modem control.
GND	Logic ground
Maximum Output Load (TXD/RTS)	3kΩ, 1,000pf
Minimum Output Voltage Swing	±5V
Output Short Circuit Protection	±15mA
Port Status LED	Green LED is illuminated when active for TXD, RXD and RTS
Cable Options	D2-DSCBL USB-RS232-1 with D2-DSCBL FA-CABKIT FA-ISOCON for converting RS-232 to isolated RS-485

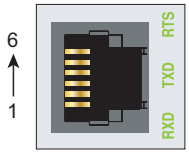

6-pin RJ12 Female Modular Connector

Pin #	Signal	
1	GND	Logic Ground
2	+5V	210 mA Maximum
3	RXD	RS-232 Input
4	TXD	RS-232 Output
5	RTS	Request to Send
6	GND	Logic Ground

Remote Slave Module

RS-485 Serial Port

Non-isolated RS-485 port connects the P2-RS as a Modbus or ASCII master or slave to a peripheral device.

Removable connector included. Spare connectors available (part no. P3-RS485CON).

RS-485 Specifications	
Description	Non-isolated RS-485 port connects the P2-RS as a Modbus or ASCII master or slave to a peripheral device. Includes ESD/EFT protection and automatic echo cancellation when transmitter is active.
Data Rates	Selectable, 1200, 2400, 9600, 19200, 33600, 38400, 57600, and 115200 bps.
TXD+/RXD+	RS-485 transceiver high
TXD-/RXD-	RS-485 transceiver low
GND	Logic ground
Input Impedance	19kΩ
Maximum load	50 transceivers, 19kΩ each, 60Ω termination
Output Short Circuit Protection	±250mA, thermal shut-down protection
Electrostatic Discharge Protection	Contact ±4kV, Air ±8kV per IEC1000-4-2 Cable is installed for testing.
Electrical Fast Transient Protection	±1kV, per IEC1000-4-4
Minimum Differential Output Voltage	1.5 V with 60Ω load
Fail safe inputs	Logic high input state if inputs are unconnected
Maximum Common Mode Voltage	-7.5 V to 12.5 V.
Port Status LED	Green LED is illuminated when active for TXD and RXD
Cable Options	Go to AutomationDirect.com for RS-485 cables.

P2-RS

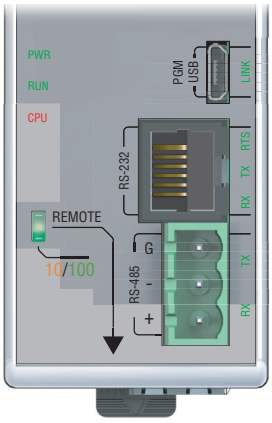

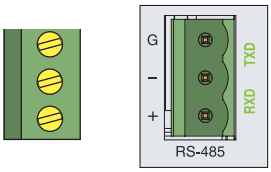

Removable connector included. Spare connectors available (part no. P3-RS485CON).

Pin #	Signal
G	GND
–	TXD-/RXD-
+	TXD+/RXD+

Terminal Block Specifications	
Part Number	P3-RS485CON
Number of positions	3 Screw terminals
Pitch	5mm
Wire Range	28–12 AWG Solid Conductor 30–12 AWG Stranded Conductor
Screw Driver Width	1/8 inch (3.175 mm) maximum
Screw Size	M2.5
Screw Torque	4.5 lb·in (0.51 N·m)

Installation Procedure

Step One:

Locate the two sockets next to the power supply; the module will be inserted into this location.

Step Two:

Seat the P2-RS module on support platform and push towards base until PCB is fully engaged into the connector.

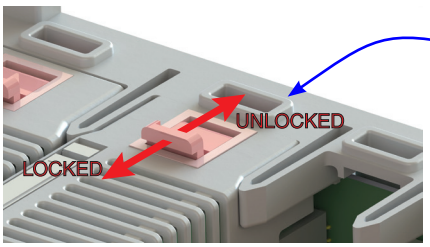

Step Three:

Snap retaining tab into the locked position.

Dimensions and Installation

It is important to review and understand the installation requirements for your Productivity® 2000 system. Your knowledge of these requirements will help ensure that your system operates within safe environmental and electrical limits.

Plan for Safety

This catalog should never be used as a replacement for the product inserts and user manual. Each base, CPU, power supply, I/O module, and specialty module comes with a product insert. You can purchase, download for free, or view online the Productivity2000 user manual (P2-USER-M). These documents, along with the software help files, contain important safety information that must be followed.

The system installation should comply with all appropriate electrical codes and standards.

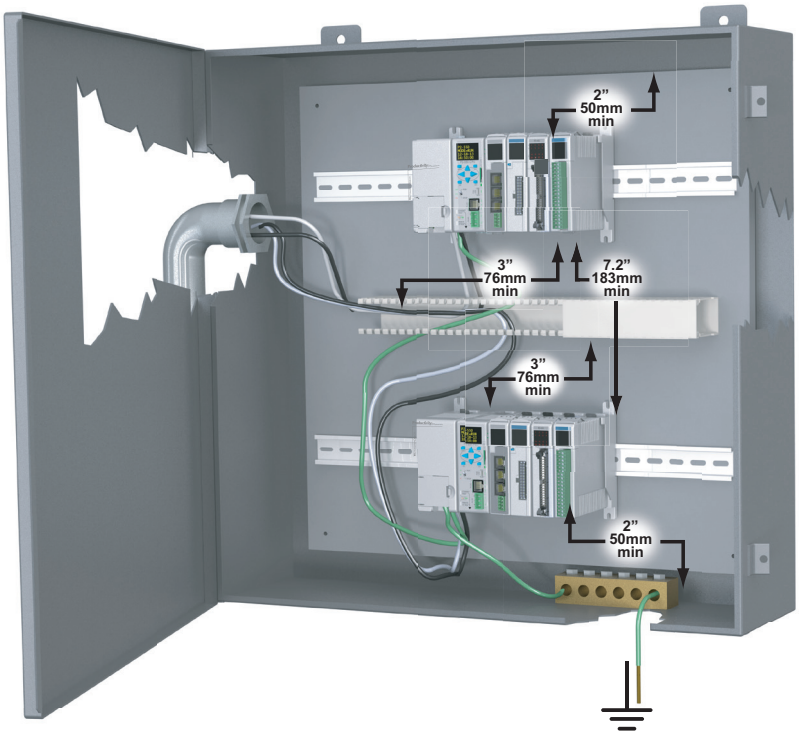

Enclosures

Your selection of a proper enclosure is important to ensure safe and proper operation of your Productivity2000 system. Applications for the Productivity2000 system vary and may require additional hardware considerations. The minimum considerations for enclosures include:

- Conformance to electrical standards
- Protection from the elements in an industrial environment
- Common ground reference
- Maintenance of specified ambient temperature
- Access to the equipment
- Security or restricted access
- Sufficient space for proper installation and maintenance of the equipment

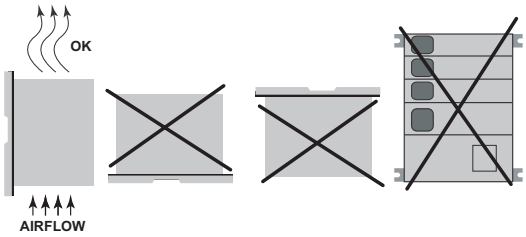

Mounting Position

Mount the bases horizontally, as shown in the illustration, to provide proper ventilation. Do not mount the bases vertically, upside down, or on a flat horizontal surface.

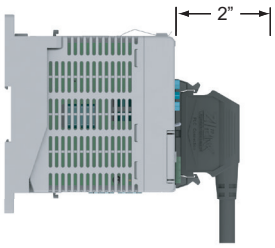

NOTE: Add 2" to mounting depth when using ***ZIP***Link cable.

Dimensions and Installation

Mounting Clearances

Provide a minimum clearance of 2 inches (50mm) between the bases and all sides of the enclosure. Allow extra door clearance for operator panels and other door mounted items. There should be a minimum of 3 inches (76mm) clearance between the base and any wire duct, and a minimum of 7.2 inches (183mm) from base to base in a multiple base installation.

Grounding

A good common ground reference (earth ground) is essential for proper operation of the Productivity® 2000 system. One side of all control circuits, power circuits and the ground lead must be properly connected to earth ground by either installing a ground rod in close proximity to the enclosure or by connecting to the incoming power system ground. There must be a single-point ground (i.e. copper bus bar) for all devices in the enclosure that require an earth ground.

Temperature Considerations

The Productivity2000 system should be installed in an environment operating within the equipment operating temperature specifications. If the temperature deviates above or below the specification, measures such as cooling or heating the enclosure should be taken to maintain the specification.

Power Considerations

The Productivity2000 system is designed to be powered by any of the Productivity2000 power supplies. The Productivity2000 has achieved CE certification without requiring EMF/RFI line noise filters on the power supplies. Please review the "EU Directives" document, located in the User Manual or at www.productivity2000.com, for applications which require CE Compliance.

Base Dimensions, inches[mm]

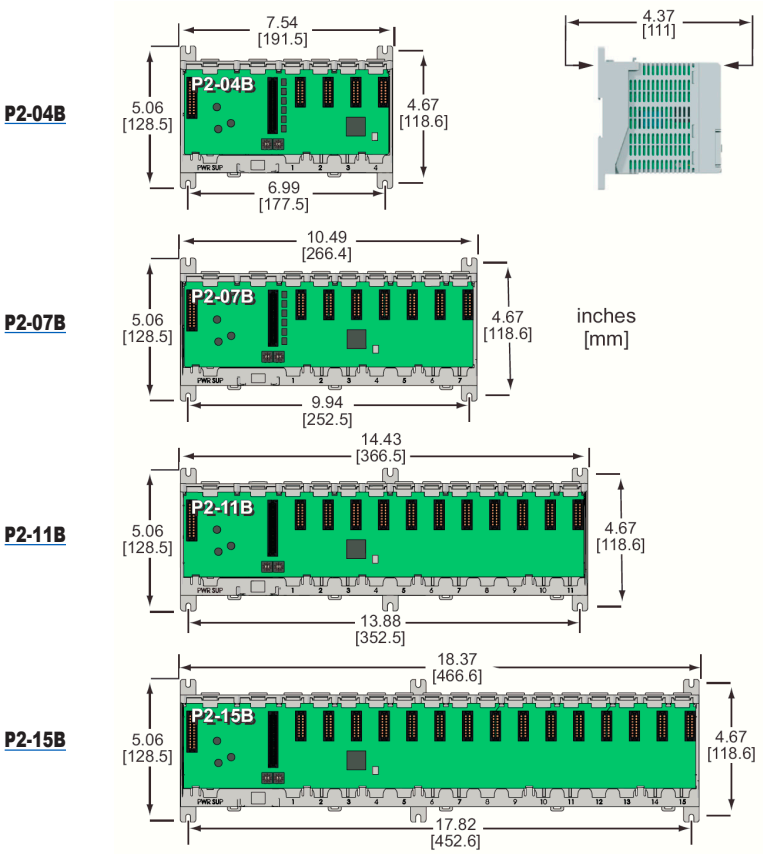

Base Installation

Using Mounting Rails

The Productivity®2000 bases can be secured to the cabinet using mounting rails. Use rails that conform to DIN EN standard 50022. ADC offers a complete line of DIN rail, DINnectors and DIN rail mounted apparatus. The rails are approximately 35mm high, with a depth of 7.5 mm. When mounting the base on a rail, consider using end brackets on each side of the base. The end brackets keep the base from sliding horizontally along the rail. This minimizes the possibility of accidentally pulling the wiring loose.

Several retaining clips are located on the lower rear surface of the base of the base. To secure the base to a DIN rail, place the base onto the rail and gently push up on the retaining clips. The clips lock the base onto the rail.

To remove the base, pull down on the retaining clips, lightly pull forward from the bottom and rotate the base, pulling it away from the rail.

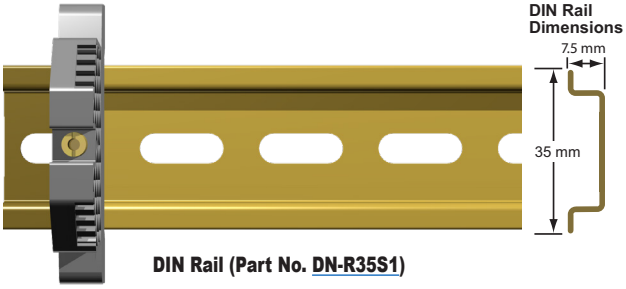

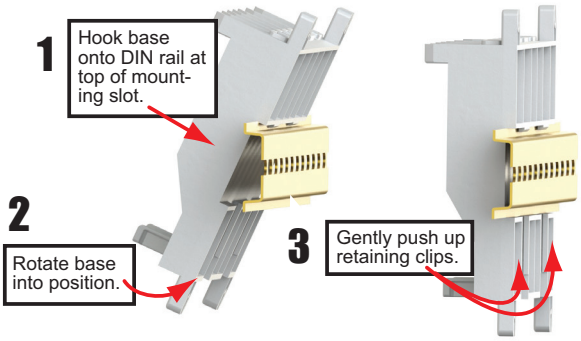

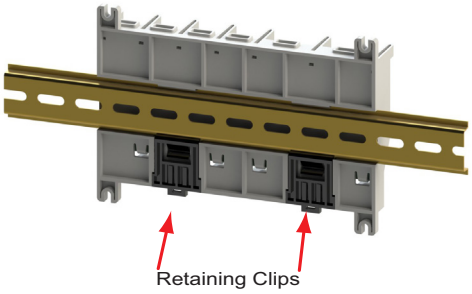

Wiring I/O Modules

Wiring Methods

There are two available methods for wiring most I/O modules: The ZIPLink wiring system (See page following), or hand wiring to the optional Removable Terminal Blocks.

Removable Terminal Blocks

For most I/O modules you can purchase a removable terminal block (p/n shown below).

Note: Thermocouple and RTD modules are not compatible with the ZIPLink system and are shipped with the optional terminal blocks included.

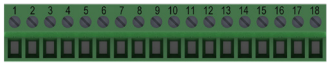

Removable Terminal Block: p/n P2-RTB

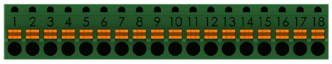

Removable Terminal Block: p/n P2-RTB-1

Removable Terminal Block Specifications		
Part Number	***P2-RTB***	***P2-RTB-1***
Price	$9.75	$9.75
Number of positions	18 screw terminals	18 push release terminals
Wire Range	30–16 AWG (0.051–1.31 mm²) Solid/stranded conductor 3/64 in (1.2 mm) insulation max. 1/4 in (6–7 mm) strip length	28–16 AWG (0.081–1.31 mm²) Solid/stranded conductor 3/64 in (1.2 mm) insulation max. 19/64 in (7–8 mm) strip length
Conductors	USE COPPER CONDUCTORS, 75ºC or equivalent.	
Screw Driver Width	0.1 in. (2.5 mm) maximum	N/A
Screw Size	M2	N/A
Screw Torque	2.5 lb·in (0.28 N·m)	N/A

** Recommended screw driver: P/N TW-SD-MSL-1.*

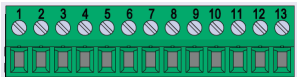

Removable Terminal Block: p/n P2-RTB13

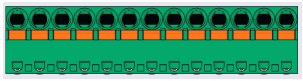

Removable Terminal Block: p/n P2-RTB13-1

Removable Terminal Block Specifications		
Part Number	***P2-RTB13***	***P2-RTB13-1***
Price	$11.50	$11.50
Number of positions	13 screw terminals	13 push release terminals
Wire Range	24–12 AWG (0.25–4 mm²) Solid/stranded conductor 3/64 in (1.2 mm) insulation max. 3/8 in (9–10 mm) strip length	
Conductors	USE COPPER CONDUCTORS, 75ºC or equivalent.	
Screw Driver Width	0.13 in. (3.5 mm) maximum	N/A
Screw Size	M2.5	N/A
Screw Torque	4.4 lb·in (0.5 N·m)	N/A

** Recommended screw driver: P/N TW-SD-MSL-1.*

Terminal Block Removal

Removable Terminal Blocks fit firmly into the I/O module terminal recess. To remove, firmly grasp the removable terminal block and wiggle side to side while pulling away from the module.

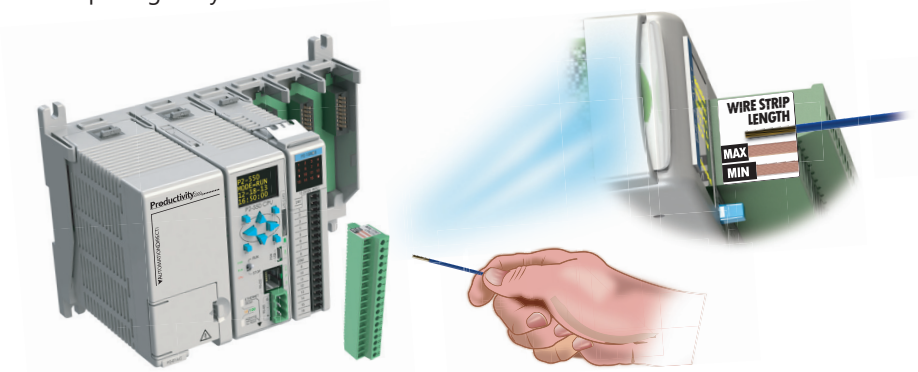

Wiring Solutions

Wiring Solutions using the ZIPLink wiring system

ZIPLinks eliminate the normally tedious process of wiring between devices by utilizing prewired cables and DIN rail mount connector modules. It's as simple as plugging in a cable connector at either end and terminating wires at only one end. Prewired cables keep installation clean and efficient, using half the space at a fraction of the cost of standard terminal blocks. There are several wiring solutions available when using the ZIPLink System ranging from CPU I/O-to-ZIPLink Connector Modules that are ready for field termination, options for connecting to third party devices, GS Series, DuraPulse and SureServo Drives, and specialty relay, transorb and communications modules. Pre-printed I/O-specific adhesive label strips for quick marking of ZIPLink modules are provided with ZIPLink cables. See the following solutions to help determine the best ZIPLink system for your application.

Solution 1: DirectLOGIC, CLICK, Productivity® 1000, Productivity® 2000 and Productivity3000® I/O Modules to ZIPLink Connector Modules

When looking for quick and easy I/O-to-field termination, a ZIPLink connector module used in conjunction with a prewired ZIPLink cable, consisting of an I/O terminal block at one end and a multi-pin connector at the other end, is the best solution.

Use the CPU I/O Modules to ZIPLink Connector Modules selector tables located in the ZIPLink Wiring Solutions section to:

1. Locate your I/O module/CPU,
2. Select a ZIPLink Module, and
3. Select a corresponding ZIPLink Cable.

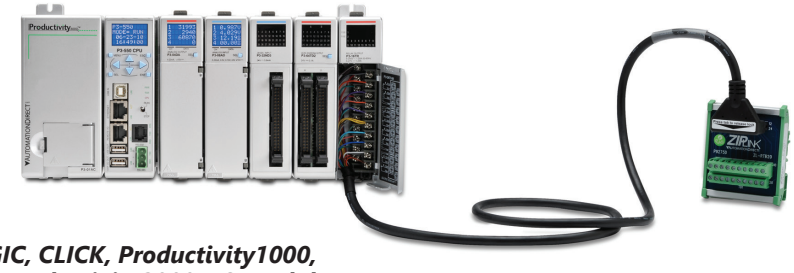

Solution 2: DirectLOGIC, CLICK, Productivity1000, Productivity2000 and Productivity3000 I/O Modules to 3rd Party Devices

When wanting to connect I/O to another device within close proximity of the I/O modules, no extra terminal blocks are necessary when using the ZIPLink Pigtail Cables. ZIPLink Pigtail Cables are prewired to an I/O terminal block with color-coded pigtail with soldered-tip wires on the other end.

Use the I/O Modules to 3rd Party Devices selector tables located in the ZIPLink Wiring Solutions section to:

1. Locate your CPU I/O module, and
2. Select a ZIPLink Pigtail Cable that is compatible with your 3rd party device.

Solution 3: GS Series and DuraPulse Drives Communication Cables

Need to communicate via Modbus RTU to a drive or a network of drives?

ZIPLink cables are available in a wide range of configurations for connecting to CPUs, SureServo, SureStep, Stellar Soft Starter and AC drives. Add a ZIPLink communications module to quickly and easily set up a multi-device network.

Use the Drives Communication selector tables located in the ZIPLink Wiring Solutions section to:

1. Locate your Drive and type of communications, and
2. Select a ZIPLink cable and other associated hardware.

Wiring Solutions

Solution 4: Serial Communications Cables

ZIPLink offers communications cables for use with DirectLOGIC, CLICK, Productivity1000, Productivity2000 and Productivity3000 CPUs, that can also be used with other communications devices. Connections include a 6-pin RJ12 or 9-pin, 15-pin and 25-pin D-Sub connectors which can be used in conjunction with the RJ12 or D-Sub Feedthrough modules.

Using the Serial Communications Cables selector table located in the ZIPLink Wiring Solutions section,

1. Locate your connector type
2. Select a cable.

Solution 5: Specialty ZIPLink Modules

For additional application solutions, ZIPLink Specialty Modules are available in a variety of configurations including stand-alone relays, 24VDC and 120VAC transorb modules, D-Sub, RJ12 and RJ45 feedthrough modules, communication port adapter and distribution modules, and SureServo 50-pin I/O interface connection.

Using the ZIPLink Specialty Modules selector table located in the ZIPLink Wiring Solutions section:

1. Locate the type of application.
2. Select a ZIPLink module.

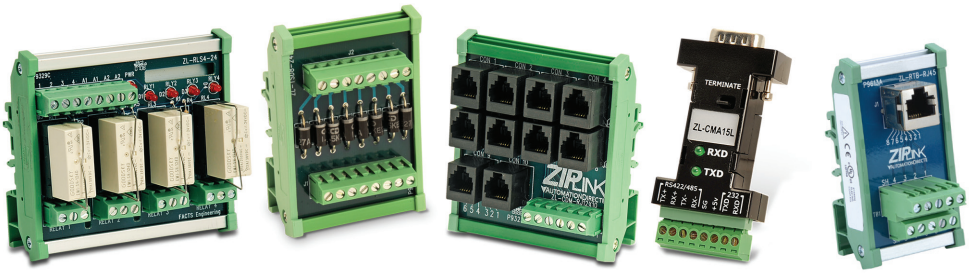

Solution 6: ZIPLink Connector Modules to 3rd Party Devices

If you need a way to connect your device to terminal blocks without all that wiring time, then our pigtail cables with color-coded soldered-tip wires are a good solution. Used in conjunction with any compatible ZIPLink Connector Modules, a pigtail cable keeps wiring clean and easy and reduces troubleshooting time.

Use the Universal Connector Modules and Pigtail Cables table located in the ZIPLink Wiring Solutions section to:

1. Select module type,
2. Select the number of pins
3. Select cable.

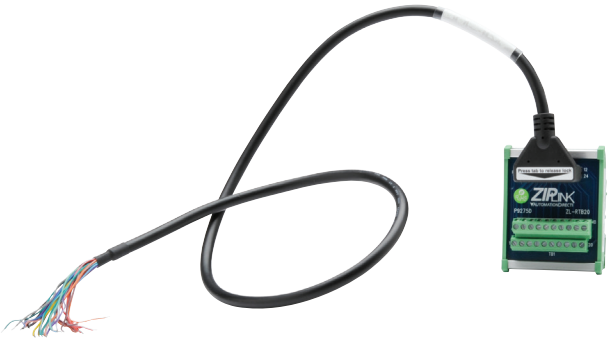

I/O Modules to ZIPLink Connector Modules - Productivity2000

Discrete Input Modules

Productivity2000 Input Module ZIPLink Selector

I/O Input Module	ZIPLink Parameters			
	# of Terms	Component	Part No.	Cable Part No.
P2-08ND3-1	18	Feedthrough	ZL-RTB20 (-1)	ZL-P2-CBL18 *
P2-16ND3-1	18	Sensor/LED	ZL-LTB16-24-1	
P2-16ND-TTL	18	Feedthrough	ZL-RTB20 (-1)	
P2-08NE3				
P2-16NE3				
P2-32ND3-1	40	Feedthrough	ZL-RTB40 (-1)	ZL-CBL40 *
		Sensor/LED	ZL-LTB16-24-1	
P2-32NE3	40	Feedthrough	ZL-RTB40 (-1)	
P2-08NAS	8	Feedthrough	ZL-RTB20 (-1)	ZL-P2-CBL18 *
P2-16NA	18			

Specialty Modules

Productivity2000 Specialty & Motion Modules ZIPLink Selector

I/O Module	ZIPLink Parameters			
	# of Terms	Component	Part No.	Cable Part No.
P2-HSI	40	Feedthrough	ZL-RTB40 (-1)	ZL-CBL40-S ZL-CBL40-1S ZL-CBL40-2S
P2-HSO				
P2-02HSC	See Note 1			
P2-04PWM	18	Feedthrough	ZL-RTB20 (-1)	ZL-P2-CBL18 *
P2-08SIM	See Note 1			
P2-SCM	See Note 1			

Discrete Output Modules

Productivity2000 Output Module ZIPLink Selector

I/O Output Module	ZIPLink Parameters			
	# of Terms	Component	Part No.	Cable Part No.
P2-08TD1S	8	Feedthrough	ZL-RTB20 (-1)	ZL-P2-CBL18 *
P2-08TD2S	8			
P2-15TD1	15			
P2-15TD2	15			
P2-08TD1P	18			
P2-16TD-TTL	18			
P2-08TD2P	18			
P2-08TRS	18			
P2-08TAS	18			
P2-16TA	18	Feedthrough	ZL-RTB20 (-1)	
		Fuse	ZL-RFU20 [2]	
P2-16TD1P	18	Feedthrough	ZL-RTB20 (-1)	
		Relay (Sinking)	ZL-RRL16-24-1 ZL-RRL16W-24-1 ZL-RRL16F-24-1 ZL-RRL16HDF-24-1	
P2-16TD2P	18	Feedthrough	ZL-RTB20 (-1)	
		Relay (Sourcing)	ZL-RRL16-24-2 ZL-RRL16W-24-2 ZL-RRL16F-24-2 ZL-RRL16HDF-24-2	
P2-32TD1P	32	Feedthrough	ZL-RTB40 (-1)	ZL-CBL40 *
P2-32TD2P	32			
P2-16TR	18	Feedthrough	ZL-RTB20 (-1)	ZL-P2-CBL18 *
		Fuse	ZL-RFU20 [2]	

** Select the cable length by replacing the * with: Blank = 0.5 m, -1 = 1.0 m, or -2 = 2.0 m.*
1. These modules are not supported by the ZIPLink wiring system
2. Note: Fuses (5 x 20 mm) are not included. See Edison Electronic Fuse section for (5 x 20 mm) fuse. S500 and GMA electronic circuit protection for fast-acting maximum protection. S506 and GMC electronic circuit protection for time-delay performance. Ideal for inductive circuits.
To ensure proper operation, do not exceed the voltage and current rating of ZIPLink module. ZL-RFU20 = 2A per circuit; ZL-RFU40 = 400 mA per circuit.

I/O Modules to *ZIP*Link Connector Modules - Productivity2000

Analog Input Modules

Productivity2000 Analog Input Module ZIPLink Selector				
I/O Analog Module	***ZIPLink Parameters***			
	# of Terms	Component	Part No.	Cable Part No.
P2-04AD	18	Feedthrough	ZL-RTB20 (-1)	ZL-P2-CBL18 *
P2-04AD-1				
P2-04AD-2				
P2-08AD-1				
P2-08AD-2				
P2-08ADL-1				
P2-08ADL-2				
P2-16AD-1	24			ZL-P2-CBL24 *
P2-16AD-2				
P2-16ADL-1				
P2-16ADL-2				
P2-06RTD	Matched Only	See Note 1		
P2-08THM	T/C Wire Only	See Note 1		
P2-08NTC	Copper Conductors	See Note 1		

** Select the cable length by replacing the * with: Blank = 0.5 m, -1 = 1.0 m, or -2 = 2.0 m.*
1. These modules are not supported by the ZIPLink wiring system.

Analog Output Modules

Productivity2000 Analog Output Module ZIPLink Selector				
I/O Analog Module	***ZIPLink Parameters***			
	# of Terms	Component	Part No.	Cable Part No.
P2-04DA	18	Feedthrough	ZL-RTB20 (-1)	ZL-P2-CBL18 *
P2-04DA-1				
P2-04DA-2				
P2-04DAL-1				
P2-04DAL-2				
P2-08DA-1				
P2-08DA-2				
P2-08DAL-1				
P2-08DAL-2				
P2-16DA-1	24			ZL-P2-CBL24 *
P2-16DA-2				
P2-16DAL-1				
P2-16DAL-2				
P2-8AD4DA-1	18			ZL-P2-CBL18 *
P2-8AD4DA-2				

I/O Modules

A variety of discrete, analog and specialty I/O modules are available for use in a Productivity2000 system. Specifications for each module are on the following pages.

A filler module is available for unused I/O module slots (part number P2-FILL).

Discrete Input Modules

Productivity2000 Discrete Input Modules			
Part Number	**Number of Inputs**	**Description**	**Price**
P2-08SIM	8	Input Simulator Module	$69.00
P2-08ND3-1	8	Sinking/Sourcing 12–24 VDC	$72.00
P2-16ND-TTL	16	Sinking/Sourcing	$101.00
P2-16ND3-1	16	Sinking/Sourcing 24V AC/DC	$100.00
P2-32ND3-1	32	Sinking/Sourcing 12–24 VDC	$148.00
P2-08NE3	8	Sinking/Sourcing 24V AC/DC	$59.00
P2-16NE3	16	Sinking/Sourcing 12–24 VDC	$101.00
P2-32NE3	32	Sinking/Sourcing 24V AC/DC	$148.00
P2-08NAS	8	AC Isolated 100-120 VAC	$113.00
P2-16NA	16	AC 100-240 VAC	$154.00

Specialty Modules

Productivity2000 Specialty Modules			
Part Number	**Number of Channels**	**Description**	**Price**
P2-HSI	2	High-Speed Input	$288.00
P2-HSO**	2	High-Speed Output	$288.00
P2-02HSC	2	High-Speed Counter	$120.00
P2-04PWM	4	Pulse-Width Modulation	$132.00
P2-SCM	4 ports	Serial Communications Module	$242.00

** ZIPLink required.

Analog Output Modules

Productivity2000 Analog Output Modules			
Part Number	**Number of Channels**	**Description**	**Price**
P2-04DA	4	Analog Output (Voltage/Current)	$286.00
P2-04DA-1	4	Analog Output (Current)	$217.00
P2-04DA-2	4	Analog Output (Voltage)	$212.00
P2-04DAL-1*	4	Analog Output (Current)	$162.00
P2-04DAL-2*	4	Analog Output (Voltage)	$151.00
P2-08DA-1	8	Analog Output (Current)	$398.00
P2-08DA-2	8	Analog Output (Voltage)	$365.00
P2-08DAL-1*	8	Analog Output (Current)	$297.00
P2-08DAL-2*	8	Analog Output (Voltage)	$288.00
P2-16DA-1	16	Analog Output (Current)	$521.00
P2-16DA-2	16	Analog Output (Voltage)	$499.00
P2-16DAL-1*	16	Analog Output (Current)	$371.00
P2-16DAL-2*	16	Analog Output (Voltage)	$355.00

* Low resolution analog modules without OLED display.

Discrete Output Modules

Productivity2000 Discrete Output Modules			
Part Number	**Number of Outputs**	**Description**	**Price**
P2-08TD1S	8	Isolated Sinking	$70.00
P2-08TD2S	8	Isolated Sourcing	$70.00
P2-15TD1	15	Sinking	$97.00
P2-15TD2	15	Sourcing	$95.00
P2-08TD1P	8	Sinking Protected	$60.00
P2-08TD2P	8	Sourcing Protected	$60.00
P2-16TD-TTL	16	Sourcing	$116.00
P2-16TD1P	16	Sinking Protected	$101.00
P2-16TD2P	16	Sourcing Protected	$101.00
P2-32TD1P	32	Sinking Protected	$148.00
P2-32TD2P	32	Sourcing Protected	$148.00
P2-08TAS	8	Isolated AC	$154.00
P2-16TA	16	100-240 VAC Output	$190.00
P2-06TRS	6	Isolated Relay	$111.00
P2-08TRS	8	Isolated Relay	$73.00
P2-16TR	16	Relay	$137.00

Analog Input Modules

Productivity2000 Analog Input Modules			
Part Number	**Number of Channels**	**Description**	**Price**
P2-04AD	4	Analog Input (Voltage/Current)	$288.00
P2-04AD-1	4	Analog Input (Current)	$217.00
P2-04AD-2	4	Analog Input (Voltage)	$224.00
P2-08AD-1	8	Analog Input (Current)	$303.00
P2-08AD-2	8	Analog Input (Voltage)	$333.00
P2-08ADL-1*	8	Analog Input (Current)	$212.00
P2-08ADL-2*	8	Analog Input (Voltage)	$230.00
P2-16AD-1	16	Analog Input (Current)	$366.00
P2-16AD-2	16	Analog Input (Voltage)	$406.00
P2-16ADL-1*	16	Analog Input (Current)	$261.00
P2-16ADL-2*	16	Analog Input (Voltage)	$289.00
P2-06RTD	6	Analog RTD Input	$476.00
P2-08NTC	8	Analog Thermocouple Input	$424.00
P2-08THM	8	Analog Thermistor Input	$468.00

Productivity2000 Analog Input/Output Modules			
Part Number	**Number of Channels**	**Description**	**Price**
P2-8AD4DA-1	8/4	Analog Input/Output (Current)	$456.00
P2-8AD4DA-2	8/4	Analog Input/Output (Voltage)	$456.00

I/O Module Installation Procedure

WARNING: ***DO NOT APPLY FIELD POWER UNTIL THE FOLLOWING STEPS ARE COMPLETED. SEE HOT-SWAP PROCEDURE FOR EXCEPTIONS.***

Step One: Align module catch with base slot and module into connector.

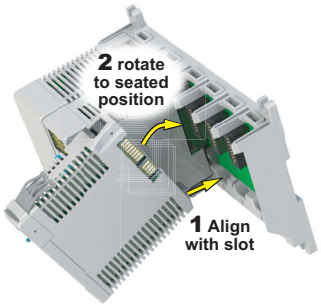

Step Two: Pull top locking tab toward module face. Click indicates lock is engaged.

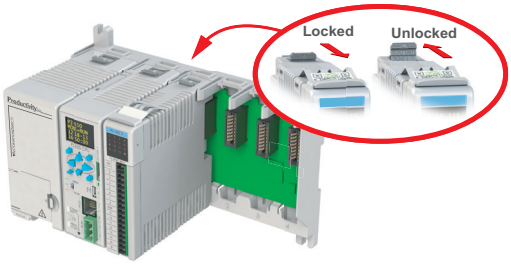

Step Three: Attach field wiring using removable terminal block or ZIPLink wiring system.

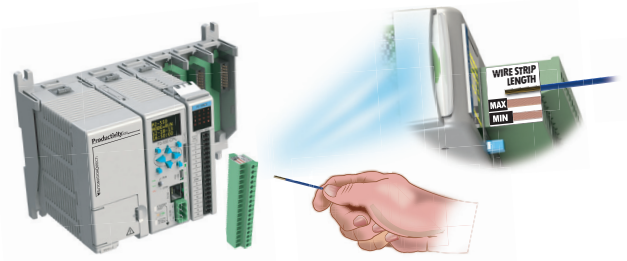

WARNING: ***EXPLOSION HAZARD – DO NOT CONNECT OR DISCONNECT CONNECTORS OR OPERATE SWITCHES WHILE CIRCUIT IS LIVE UNLESS THE AREA IS KNOWN TO BE NON-HAZARDOUS. DO NOT HOT-SWAP MODULES UNLESS THE AREA IS KNOWN TO BE NON-HAZARDOUS.***

Input Simulator & Filler Module

P2-08SIM $69.00

Input Simulator Module

The P2-08SIM Input Simulator module provides 8 toggle switches to simulate input devices.

Input Specifications	
Inputs per Module	8 Internal switches
OFF to ON Response	Max. 20ms
ON to OFF Response	Max. 20ms
Status Indicators	Logic Side (8 points)

General Specifications	
Operating Temperature	0° to 60°C (32° to 140°F)
Storage Temperature	-20° to 70°C (-4° to 158°F)
Humidity	5 to 95% (non-condensing)
Environmental Air	No corrosive gases permitted
Vibration	IEC60068-2-6 (Test Fc)
Shock	IEC60068-2-27 (Test Ea)
Heat Dissipation	200mW
Enclosure Type	Open equipment
Module Location	Any I/O slot in a Productivity2000 system.
Weight	90g (3.2 oz.)
Agency Approvals*	UL 61010-1 and UL 61010-2-201 File E139594, Canada & USA CE (EN 61131-2 EMC, EN 61010-1 and EN 61010-2-201 Safety)*

** Meets EMC and Safety requirements. See the D.O.C. for details.*
**For complete system limits, please refer to the "Hardware and Communication Limits" table in the Productivity Suite online "Help" file "Hardware Configuration", topic P050.

P2-FILL $16.00

Filler Module

The P2-FILL filler module protects unused I/O module slots in the base.

DC Input Modules

P2-08ND3-1 $72.00

Discrete Input

The P2-08ND3-1 input module provides eight 12–24 VDC sinking/sourcing inputs.

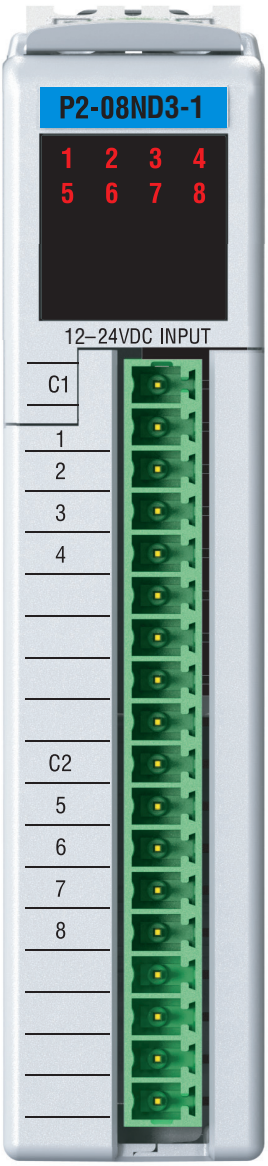

Terminal blocks sold separately.

Input Specifications	
Inputs per Module	8 (Sink/Source)
Voltage Rating	12–24 VDC
Input Voltage Range	10.2–26.4 VDC
Peak Voltage	30VDC
Input Current	3.5 mA @ 12VDC 7.5 mA @ 24VDC
Maximum Input Current @ Temp	10mA @ 26.4 VDC
ON Voltage Level*	> 9.5 VDC
OFF Voltage Level	< 7VDC
Minimum ON Current	2mA
Maximum OFF Current	1.6 mA
OFF to ON Response	2ms Maximum, 1ms Typical
ON to OFF Response	
Status Indicators	Logic Side (8 points)
Commons	2 (4 points/common) Isolated

General Specifications	
Operating Temperature	0° to 60°C (32° to 140°F)
Storage Temperature	-20° to 70°C (-4° to 158°F)
Humidity	5 to 95% (non-condensing)
Environmental Air	No corrosive gases permitted
Vibration	IEC60068-2-6 (Test Fc)
Shock	IEC60068-2-27 (Test Ea)
Field to Logic Side Isolation	1800VAC applied for 1 second
Insulation Resistance	>10MV @ 500VDC
Heat Dissipation	325mW
Enclosure Type	Open equipment
Module Keying to Backplane	Electronic
Module Location	Any I/O slot in a Productivity2000 system.
Field Wiring	Removable terminal block (not included). Use ZIPLink wiring system or optional terminal block. See Wiring Solutions.
Connector Type (Sold separately)	18-position removable terminal block
Weight	90g (3.2 oz)
Agency Approvals*	UL61010-2-201 file E139594, Canada & USA CE (EN61131-2 EMC and EN61010-2-201 Safety*)

**Meets EMC and Safety requirements. See the Declaration of Conformity for details.*
***To obtain the most current agency approval information, see the Agency Approval Checklist section on the specific component part number web page.*

NOTE: The most recent Productivity Suite software and firmware versions may be required to support new modules and new features.

We recommend using pre-wired ZIPLink cables and connection modules. See Wiring Solutions.
If you wish to hand-wire your module, removable terminal blocks are sold separately. Order part number P2-RTB or P2-RTB-1.

DC Input Modules

P2-08ND3-1 (cont'd)

Removable Terminal Block Specifications		
Part Number	***P2-RTB***	***P2-RTB-1***
Number of positions	18 screw terminals	18 push release terminals
Wire Range	30–16 AWG (0.051–1.31 mm²) Solid/stranded conductor 3/64 in (1.2 mm) insulation max. 1/4 in (6–7 mm) strip length	28–16 AWG (0.081–1.31 mm²) Solid/stranded conductor 3/64 in (1.2 mm) insulation max. 19/64 in (7–8 mm) strip length
Conductors	USE COPPER CONDUCTORS, 75ºC or equivalent.	
Screw Driver Width	0.1 in. (2.5 mm) maximum	NA
Screw Size	M2	N/A
Screw Torque	2.5 lb·in (0.28 N·m)	N/A

*** Recommended screw driver: P/N TW-SD-MSL-1.**

Wiring Diagrams

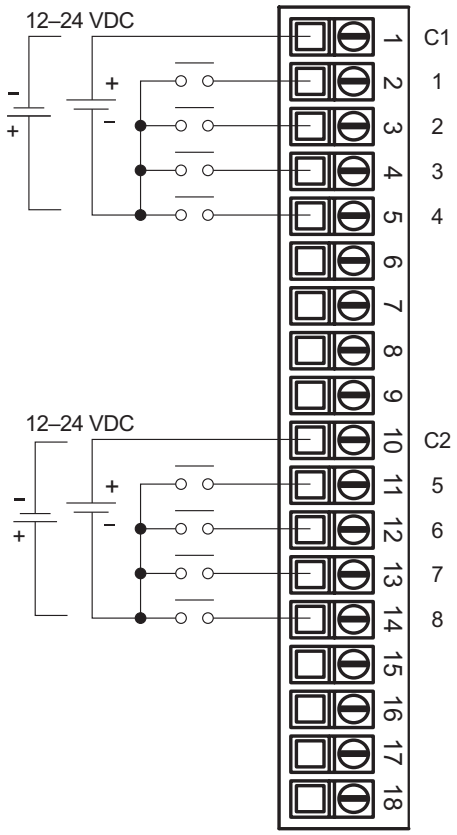

Equivalent Input Circuit

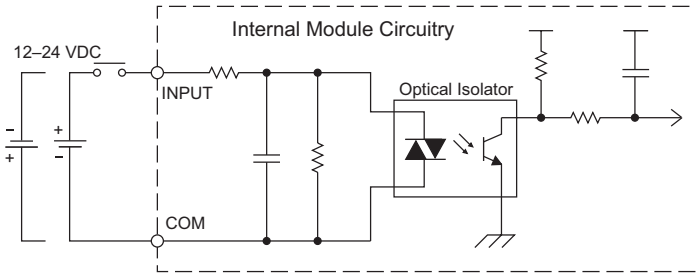

DC Input Modules

P2-16ND3-1 $100.00

Discrete Input

The P2–16ND3-1 DC Input Module provides sixteen 12–24 VDC sinking/sourcing inputs.

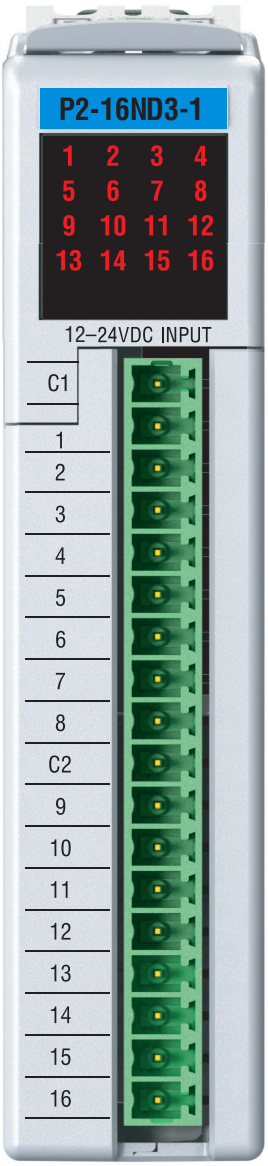

Terminal blocks sold separately.

Input Specifications	
Inputs per Module	16 (Sink/Source)
Operating Voltage Range	12–24 VDC
Input Voltage Range	10.2–26.4 VDC
Peak Voltage Range	30VDC
Input Current (typical)	3.5 mA @ 12VDC 7.5 mA @ 24VDC
Maximum Input Current	10mA @ 26.4 VDC
ON Voltage Level*	> 9.5 VDC
OFF Voltage Level	< 7VDC
Minimum ON Current	2mA
Maximum OFF Current	1.6 mA
OFF to ON Response	Max. 2ms Typical 1ms
ON to OFF Response	
Status Indicators	Logic side (16 points)
Commons per Module	2 Isolated (8 points/common) Isolated

General Specifications	
Operating Temperature	0° to 60°C (32° to 140°F)
Storage Temperature	-20° to 70°C (-4° to 158°F)
Humidity	5 to 95% (non-condensing)
Environmental Air	No corrosive gases permitted
Vibration	IEC60068-2-6 (Test Fc)
Shock	IEC60068-2-27 (Test Ea)
Field to Logic Side Isolation	1800VAC applied for 1 second
Insulation Resistance	>10MΩ @ 500VDC
Heat Dissipation	400mW
Enclosure Type	Open equipment
Module Keying to Backplane	Electronic
Module Location	Any I/O slot in a Productivity2000 system.
Field Wiring	Use ZIPLink wiring system or removable terminal block (not included). See Wiring Solutions.
Connector Type (Sold separately)	18-postion removable terminal block
Weight	90g (3.2 oz)
Agency Approvals**	UL61010-2-201 file E139594, Canada & USA CE (EN61131-2 EMC and EN61010-2-201 Safety)*

**Meets EMC and Safety requirements. See the Declaration of Conformity for details.*
***To obtain the most current agency approval information, see the Agency Approval Checklist section on the specific component part number web page.*

NOTE: The most recent Productivity Suite software and firmware versions may be required to support new modules and new features.

We recommend using pre-wired ZIPLink cables and connection modules. See Wiring Solutions. If you wish to hand-wire your module, removable terminal blocks are sold separately. Order part number P2-RTB or P2-RTB-1

DC Input Modules

P2-16ND3-1 (cont'd)

Removable Terminal Block Specifications		
Part Number	***P2-RTB***	***P2-RTB-1***
Number of positions	18 screw terminals	18 push release terminals
Wire Range	30–16 AWG (0.051–1.31 mm²) Solid/stranded conductor 3/64 in (1.2 mm) insulation max. 1/4 in (6–7 mm) strip length	28–16 AWG (0.081–1.31 mm²) Solid/stranded conductor 3/64 in (1.2 mm) insulation max. 19/64 in (7–8 mm) strip length
Conductors	USE COPPER CONDUCTORS, 75ºC or equivalent.	
Screw Driver Width	0.1 in. (2.5 mm) maximum	NA
Screw Size	M2	N/A
Screw Torque	2.5 lb·in (0.28 N·m)	N/A

** Recommended screw driver: P/N TW-SD-MSL-1.*

Wiring Diagrams

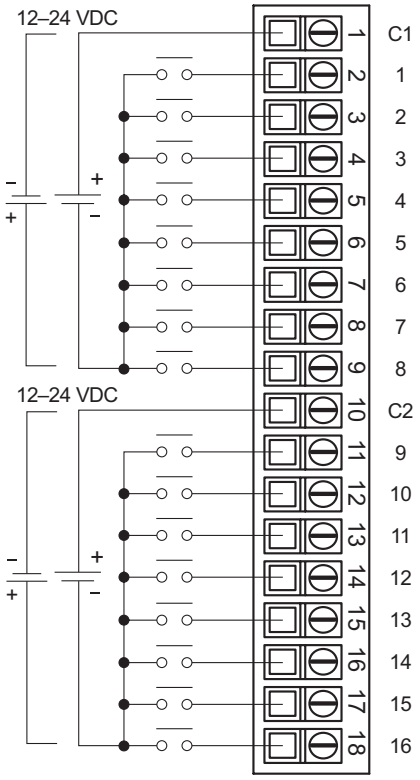

Equivalent Input Circuit

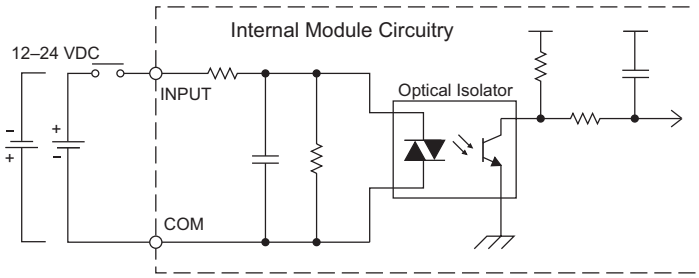

DC Input Modules

P2-16ND-TTL $101.00

Discrete Input

The P2–16ND-TTL DC Input Module provides sixteen 3.3-5 VDC sinking/sourcing inputs for use with the Productivity2000 system.

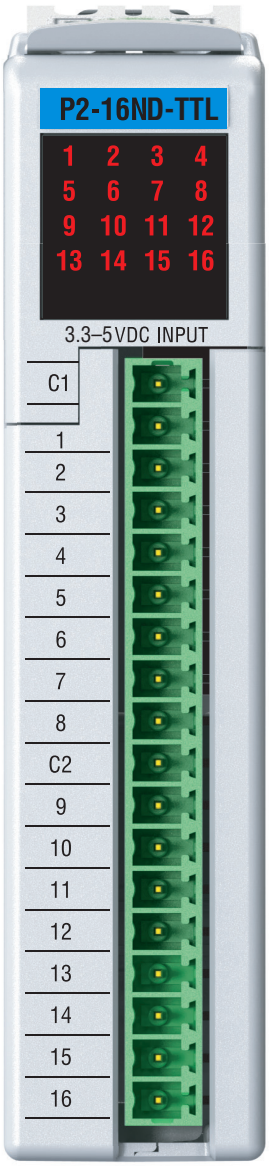

Terminal blocks sold separately.

NOTE: The most recent Productivity Suite software and firmware versions may be required to support new modules and new features.

We recommend using pre-wired ZIPLink cables and connection modules. See Wiring Solutions. If you wish to hand-wire your module, removable terminal blocks are sold separately. Order part number P2-RTB or P2-RTB-1

Input Specifications	
Inputs per Module	16 (Sink/Source)
Operating Voltage Range	3.3–5 VDC
Input Voltage Range	3.3–5 VDC ±10%
Input Current (typical)	6mA @ 3.3 VDC 8mA @ 5VDC
Maximum Input Current	10mA @ 5.5 VDC
Input Impedance	820Ω
ON Voltage Level	> 2.2 VDC
OFF Voltage Level	< 0.8 VDC
Minimum ON Current	1.4 mA
Maximum OFF Current	1mA
OFF to ON Response	Max. 2ms Typical 1ms
ON to OFF Response	
Status Indicators	Logic side (16 points)
Commons per Module	2 (8 points/common) Isolated

General Specifications	
Operating Temperature	0° to 60°C (32° to 140°F)
Storage Temperature	-20° to 70°C (-4° to 158°F)
Humidity	5 to 95% (non-condensing)
Altitude	2,000 meters, max.
Pollution Degree	2
Environmental Air	No corrosive gases permitted
Vibration	IEC60068-2-6 (Test Fc)
Shock	IEC60068-2-27 (Test Ea)
Overvoltage Category	II
Field to Logic Side Isolation	1800VAC applied for 1 second
Insulation Resistance	>10MΩ @ 500VDC
Heat Dissipation	400mW
Enclosure Type	Open equipment
Module Keying to Backplane	Electronic
Module Location	Any I/O slot in a Productivity2000 system.
Field Wiring	Use ZIPLink wiring system or removable terminal block (not included). See Wiring Solutions.
Connector Type (Sold separately)	18-postion removable terminal block
Weight	90g (3.2 oz)
Agency Approvals**	UL 61010-1 and UL 61010-2-201 File E139594, Canada & USA CE (EN 61131-2 EMC, EN 61010-1 and EN 61010-2-201 Safety)*

**Meets EMC and Safety requirements. See the Declaration of Conformity for details.*
***To obtain the most current agency approval information, see the Agency Approval Checklist section on the specific component part number web page.*

DC Input Modules

P2-16ND-TTL (cont'd)

Removable Terminal Block Specifications		
Part Number	***P2-RTB***	***P2-RTB-1***
Number of positions	18 screw terminals	18 push release terminals
Wire Range	30–16 AWG (0.051–1.31 mm²) Solid/stranded conductor 3/64 in (1.2 mm) insulation max. 1/4 in (6–7 mm) strip length	28–16 AWG (0.081–1.31 mm²) Solid/stranded conductor 3/64 in (1.2 mm) insulation max. 19/64 in (7–8 mm) strip length
Conductors	USE COPPER CONDUCTORS, 75ºC or equivalent.	
Screw Driver Width	0.1 in. (2.5 mm) maximum	N/A
Screw Size	M2	N/A
Screw Torque	2.5 lb·in (0.28 N·m)	N/A

** Recommended screw driver: P/N TW-SD-MSL-1.*

Wiring Diagrams

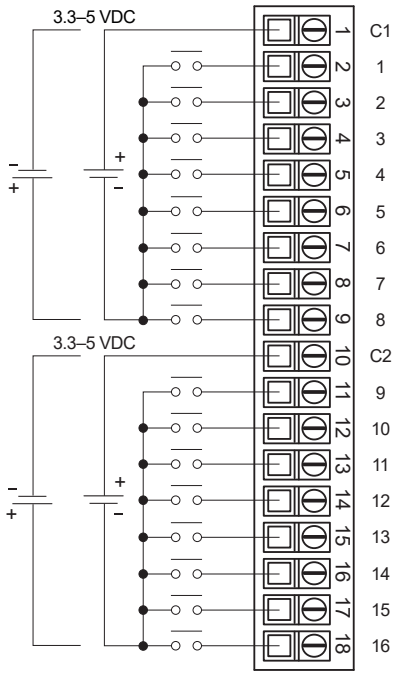

Equivalent Input Circuit

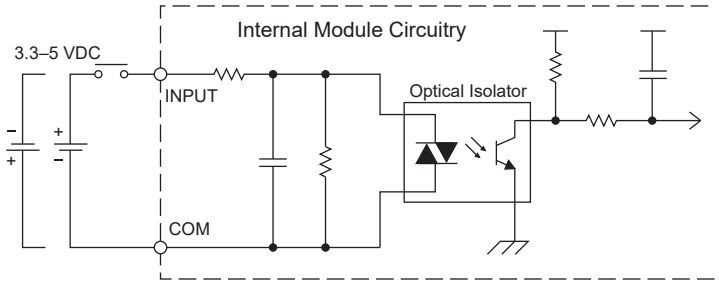

DC Input Modules

P2-32ND3-1 $148.00

Discrete Input
The P2-32ND3-1 DC Input Module provides 32 sinking/sourcing 12–24 VDC inputs.

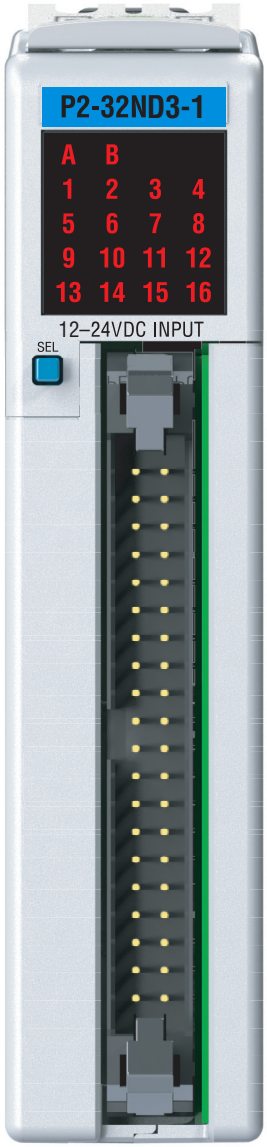

No terminal block sold for this module; ZIPLink required.

Input Specifications	
Inputs per Module	32 (Sink/Source)
Operating Voltage Range	12–24 VDC
Input Voltage Range	10.2–26.4 VDC
Peak Voltage	30VDC
Input Current (typical)	3.5 mA @ 12VDC 7.5 mA @ 24VDC
Maximum Input Current @ Temp	10mA @ 26.4 VDC
ON Voltage Level*	> 9.5 VDC
OFF Voltage Level	< 7VDC
Minimum ON Current	2mA
Maximum OFF Current	1.6 mA
OFF to ON Response	2ms Max. 1ms Typical
ON to OFF Response	
Status Indicators	Logic side (32 points)
Commons per Module	4 Isolated (8 points/common)

General Specifications	
Operating Temperature	0° to 60°C (32° to 140°F)
Storage Temperature	-20° to 70°C (-4° to 158°F)
Humidity	5 to 95% (non-condensing)
Environmental Air	No corrosive gases permitted
Vibration	IEC60068-2-6 (Test Fc)
Shock	IEC60068-2-27 (Test Ea)
Field to Logic Side Isolation	1500VAC applied for 1 second
Insulation Resistance	>10MΩ @ 500VDC
Heat Dissipation	3W
Enclosure Type	Open equipment
Module Keying to Backplane	Electronic
Module Location	Any I/O slot in a Productivity2000 system.
Field Wiring	Use ZIPLink wiring system ONLY. See Wiring Solutions.
Weight	104g (3.7 oz)
Agency Approvals** (See note below)	UL61010-2-201 file E139594, Canada & USA CE (EN61131-2 EMC and EN61010-2-201 Safety*)

**Meets EMC and Safety requirements. See the Declaration of Conformity for details.*
***To obtain the most current agency approval information, see the Agency Approval Checklist section on the specific component part number web page.*
NOTE: P2-32ND3-1 is UL/CUL compliant only when used with ZIPLink module ZL-RTB40 or ZL-RTB40-1

NOTE: The most recent Productivity Suite software and firmware versions may be required to support new modules and new features.

See Wiring Solutions for part numbers of ZIPLink cables and connection modules required with this I/O module.

Connector Specifications	
Connector Type	IDC style header with latch, Omron XG4A-4034
Number of Pins	40 point
Pitch	0.1 in (2.54 mm)

DC Input Modules

P2-32ND3-1 (cont'd)

Wiring Diagrams

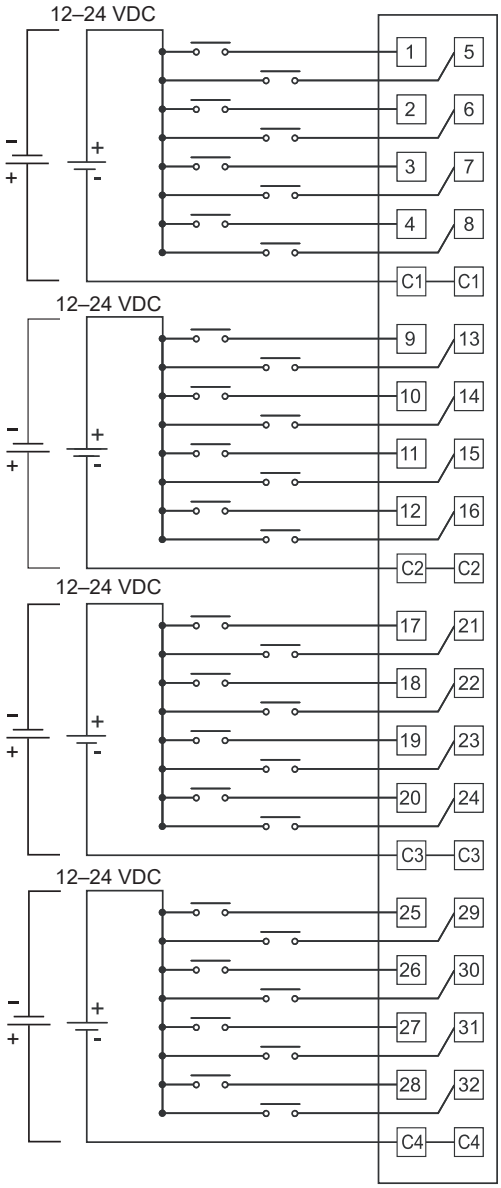

** Denotes key location of all associated ZIPLink cables.*

Equivalent Input Circuit

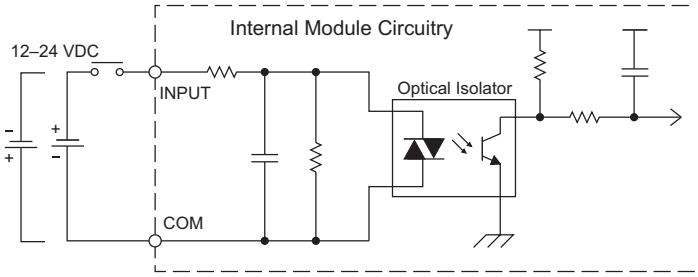

AC/DC Input Modules

P2-08NE3 $59.00

AC/DC Sinking/Sourcing Input

The P2-08NE3 AC/DC Input Module provides eight 24V AC or DC sinking/sourcing inputs.

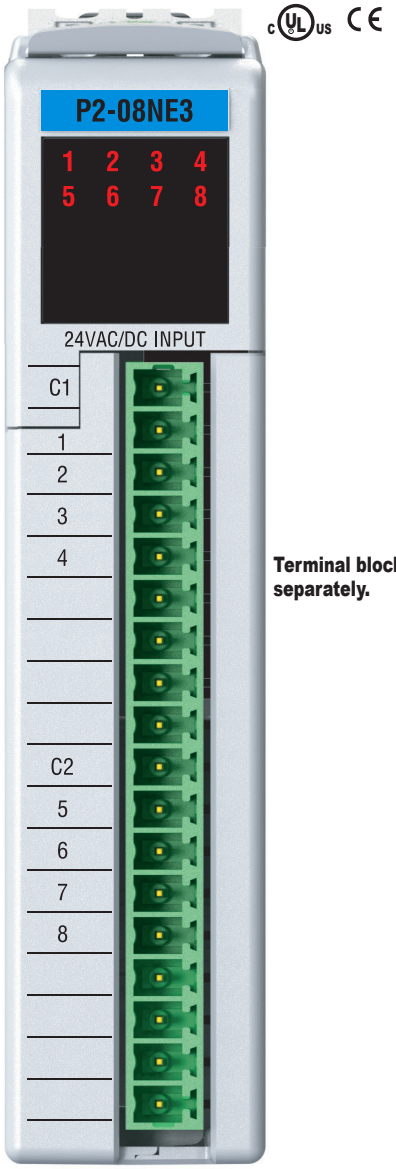

Terminal blocks sold separately.

We recommend using pre-wired ZIPLink cables and connection modules. See Wiring Solutions.
If you wish to hand-wire your module, removable terminal blocks are sold separately. Order part number P2-RTB or P2-RTB-1

Input Specifications	
Inputs per Module	8 (Sink/Source)
Voltage Range	24 VAC/VDC
Input Voltage Range	20.4 – 27.6 VAC/VDC
Peak Voltage	27.6 VAC / 30VDC
AC Frequency	47–63 Hz
Input Current (Typical)	3.4 mA @ 24 VAC/VDC
Maximum Input Current @ Temp	5.0 mA @ 27.6 VAC/VDC
ON Voltage Level	> 12VDC, > 9VAC
OFF Voltage Level	< 10.5 VDC, < 9VAC
Minimum ON Current	2.5 mA
Maximum OFF Current	0.5 mA
OFF to ON Response	DC: 6ms > max AC: 10ms
ON to OFF Response	DC: 10ms > max AC: 20ms
Status Indicators	Logic Side (8 points)
Commons	2 Isolated (4 points/common)

General Specifications	
Operating Temperature	0° to 60°C (32° to 140°F)
Storage Temperature	-20° to 70°C (-4° to 158°F)
Humidity	5 to 95% (non-condensing)
Environmental Air	No corrosive gases permitted
Vibration	IEC60068-2-6 (Test Fc)
Shock	IEC60068-2-27 (Test Ea)
Overvoltage Category	II
Field to Logic Side Isolation	1800VAC applied for 1 second
Insulation Resistance	>10MV @ 500VDC
Heat Dissipation	325mW
Enclosure Type	Open equipment
Module Keying to Backplane	Electronic
Module Location	Any I/O slot in a Productivity2000 system
Field Wiring	Removable terminal block (not included). Use ZIPLink wiring system or optional terminal block. See Wiring Solutions.
Connector Type	18 position removable terminal block (Not included)
Weight	90g (3.2 oz)
Agency Approvals**	UL 61010-1 and UL 61010-2-201 File E139594, Canada and USA CE (EN 61131-2 EMC, EN 61010-1 and EN 61010-2-201 Safety)*

**Meets EMC and Safety requirements. See the Declaration of Conformity for details.*
***To obtain the most current agency approval information, see the Agency Approval Checklist section on the specific component part number web page.*

AC/DC Input Modules

P2-08NE3 (cont'd)

Removable Terminal Block Specifications		
Part Number	***P2-RTB***	***P2-RTB-1***
Number of positions	18 screw terminals	18 push release terminals
Wire Range	30–16 AWG (0.051–1.31 mm²) Solid/stranded conductor 3/64 in (1.2 mm) insulation max. 1/4 in (6–7 mm) strip length	28–16 AWG (0.081–1.31 mm²) Solid/stranded conductor 3/64 in (1.2 mm) insulation max. 19/64 in (7–8 mm) strip length
Conductors	USE COPPER CONDUCTORS, 75ºC or equivalent.	
Screw Driver Width	0.1 in. (2.5 mm) maximum	NA
Screw Size	M2	N/A
Screw Torque	2.5 lb·in (0.28 N·m)	N/A

** Recommended screw driver: P/N TW-SD-MSL-1.*

Wiring Diagrams

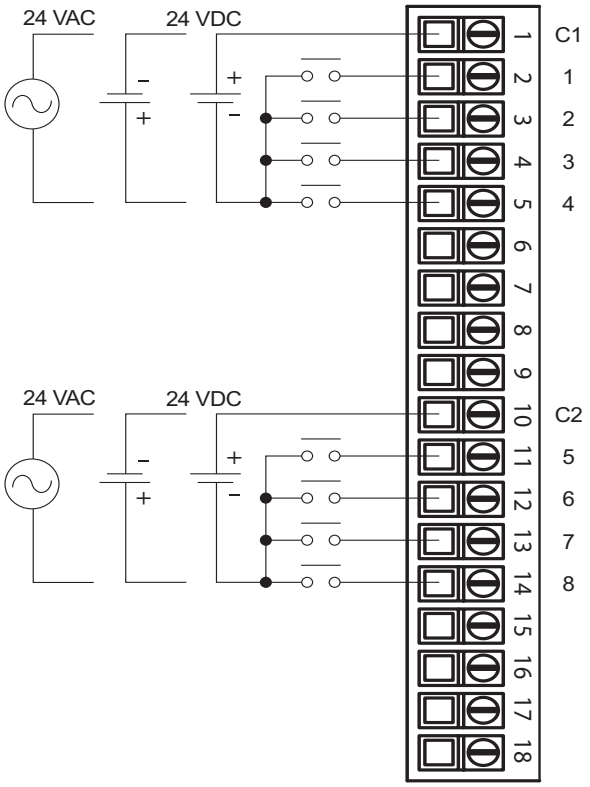

Equivalent Input Circuit

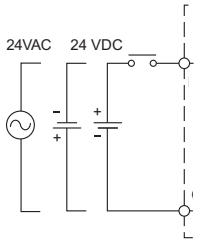

Internal Module Circuitry

AC/DC Input Modules

P2-16NE3 $101.00

AC/DC Sinking/Sourcing Input
The P2-16NE3 AC/DC Input Module provides sixteen 24VAC or DC sinking/sourcing inputs.

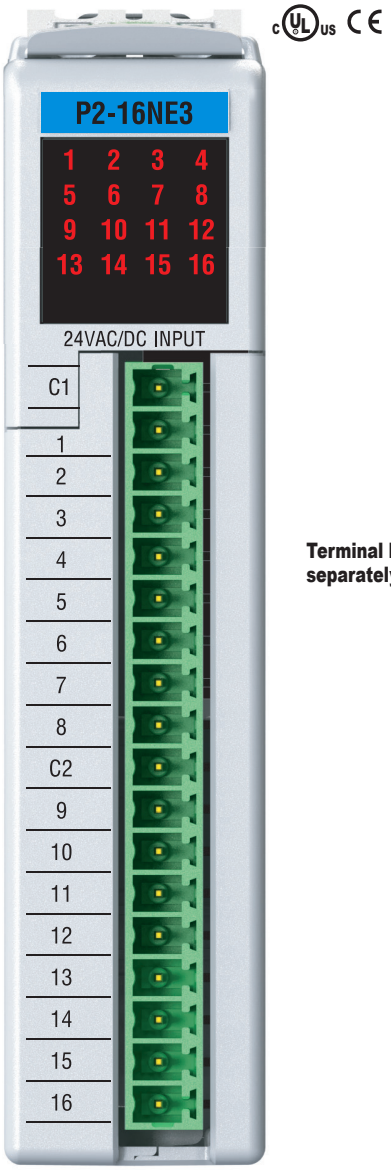

Terminal blocks sold separately.

We recommend using pre-wired *ZIP*Link cables and connection modules. See Wiring Solutions. If you wish to hand-wire your module, removable terminal blocks are sold separately. Order part number P2-RTB or P2-RTB-1

Input Specifications

Inputs per Module	16 (DC Sink/Source)
Operating Voltage Range	24 VAC/VDC
Input Voltage Range	20.4–27.6 VAC/VDC
Peak Voltage Range	27.6 VAC / 30VDC
AC Frequency	47–63 Hz
Input Current (typical)	3.4 mA @ 24 VAC/VDC
Maximum Input Current	5.0 mA @ 27.6 VAC/VDC
ON Voltage Level	> 12VDC, > 9VAC
OFF Voltage Level	< 10.5 VDC, < 9VAC
Minimum ON Current	2.5 mA
Maximum OFF Current	0.5 mA
OFF to ON Response	DC: 6ms >max; AC: 10ms
ON to OFF Response	DC:10ms >max; AC: 20ms
Status Indicators	Logic Side (16 Points)
Commons per Module	2 (8 points/common) Isolated

General Specifications

Operating Temperature	0° to 60°C (32° to 140°F)
Storage Temperature	-20° to 70°C (-4° to 158°F)
Humidity	5 to 95% (non-condensing)
Environmental Air	No corrosive gases permitted
Vibration	IEC60068-2-6 (Test Fc)
Shock	IEC60068-2-27 (Test Ea)
Field to Logic Side Isolation	1800VAC applied for 1 second
Insulation Resistance	>10MΩ @ 500VDC
Heat Dissipation	400mW
Enclosure Type	Open equipment
Module Keying to Backplane	Electronic
Module Location	Any I/O slot in a Productivity2000 system
Field Wiring	Use ZIPLink wiring system or removable terminal block (not included). See Wiring Solutions.
Connector Type (Sold separately)	18-position removable terminal block
Weight	90g (3.2 oz)
Agency Approvals**	UL508 file E139594, Canada & USA CE (EN61131-2*)

**Meets EMC and Safety requirements. See the Declaration of Conformity for details.*
***To obtain the most current agency approval information, see the Agency Approval Checklist section on the specific component part number web page.*

Removable Terminal Block Specifications

Part Number	***P2-RTB***	***P2-RTB-1***
Number of positions	18 screw terminals	18 push release terminals
Wire Range	30–16 AWG (0.051–1.31 mm²) Solid/stranded conductor 3/64 in (1.2 mm) insulation max. 1/4 in (6–7 mm) strip length	28–16 AWG (0.081–1.31 mm²) Solid/stranded conductor 3/64 in (1.2 mm) insulation max. 19/64 in (7–8 mm) strip length
Conductors	USE COPPER CONDUCTORS, 75ºC or equivalent.	
Screw Driver Width	0.1 in. (2.5 mm) maximum	NA
Screw Size	M2	N/A
Screw Torque	2.5 lb·in (0.28 N·m)	N/A

** Recommended screw driver: P/N TW-SD-MSL-1.*

AC/DC Input Modules

P2-16NE3 (cont'd)

Wiring Diagrams

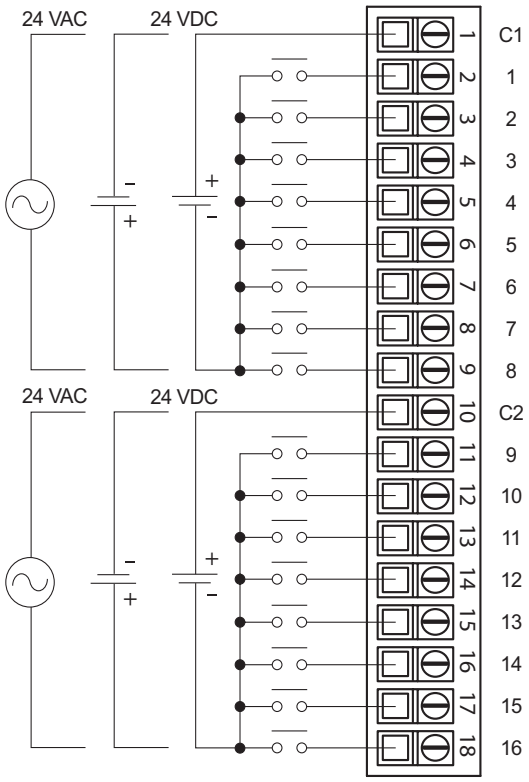

Equivalent Input Circuit

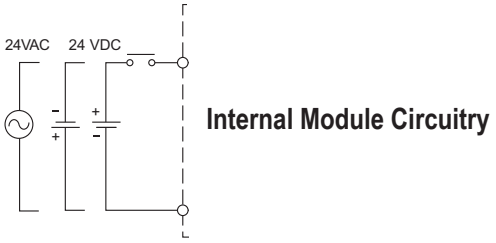

AC/DC Input Modules

P2-32NE3 $148.00

AC/DC Sinking/Sourcing Input
The P2-32NE3 AC/DC Input Module provides 32 24V AC or DC sinking/sourcing inputs.

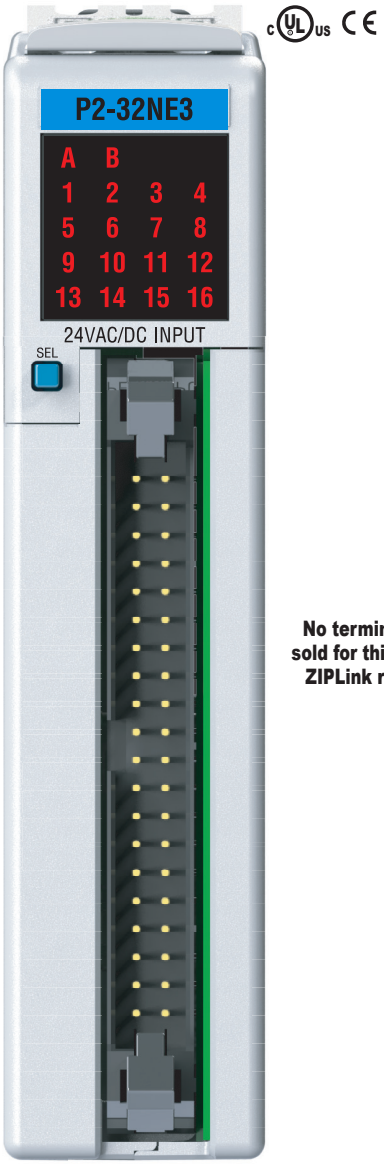

No terminal block sold for this module; ZIPLink required.

Input Specifications	
Inputs per Module	32 (Sink/Source)
Operating Voltage Range (Tolerance)	24 VAC/VDC
Input Voltage Range	20.4–27.6 VAC/VDC
Peak Voltage Range	27.6 VAC/VDC
AC Frequency	47–63 Hz
Input Current	Typ 3.4 mA @ 24 VAC/VDC
Maximum Input Current @ Temp	5.0 mA @ 27.6 VAC/VDC
ON Voltage Level	>12VDC, >9VAC
OFF Voltage Level	<10.5 VDC, <9VAC
Minimum ON Current	2.5 mA
Maximum OFF Current	0.5 mA
OFF to ON Response	DC: 10ms > max AC: 20ms
ON to OFF Response	DC: 20ms > max AC: 40ms
Status Indicators	Logic Side (32 Points)
Commons per Module	4 Isolated (8 points/common)

General Specifications	
Surrounding Air Temperature	0° to 60°C (32° to 140°F)
Storage Temperature	-20° to 70°C (-4° to 158°F)
Humidity	5 to 95% (non-condensing)
Environmental Air	No corrosive gases permitted
Vibration	IEC60068-2-6 (Test Fc)
Shock	IEC60068-2-27 (Test Ea)
Field to Logic Side Isolation	1500VAC applied for 1 second
Insulation Resistance	>10MΩ @ 500VDC
Heat Dissipation	3W
Enclosure Type	Open equipment
Module Keying to Backplane	Electronic
Module Location	Any I/O slot in a Productivity2000 system
Weight	104g (3.7 oz)
Agency Approvals	UL508 file E139594, Canada & USA CE (EN61131-2*)

**Meets EMC and Safety requirements. See the Declaration of Conformity for details.*
***To obtain the most current agency approval information, see the Agency Approval Checklist section on the specific component part number web page.*

NOTE: The most recent Productivity Suite software and firmware versions may be required to support new modules and new features.

Connector Specifications	
Connector Type	IDC style Header with latch, Omron XG4A-4034
Number of Pins	40
Pitch	0.1 in. (2.54 mm)

See Wiring Solutions for part numbers of ZIP-Link cables and connection modules required with this I/O module.

AC/DC Input Modules

P2-32NE3 (cont'd)

Wiring Diagrams

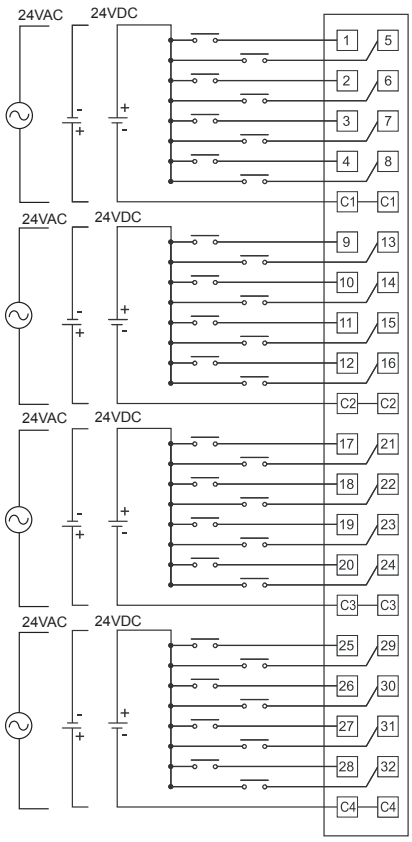

Equivalent Input Circuit

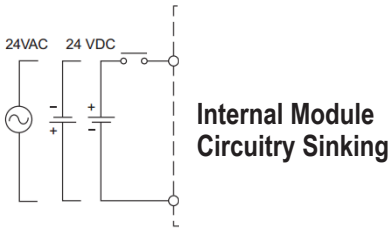

AC Input Modules

P2-08NAS $113.00

AC Input
The P2-08NAS AC Isolated Input Module provides eight 100–120 VAC isolated inputs for use with the Productivity2000 system.

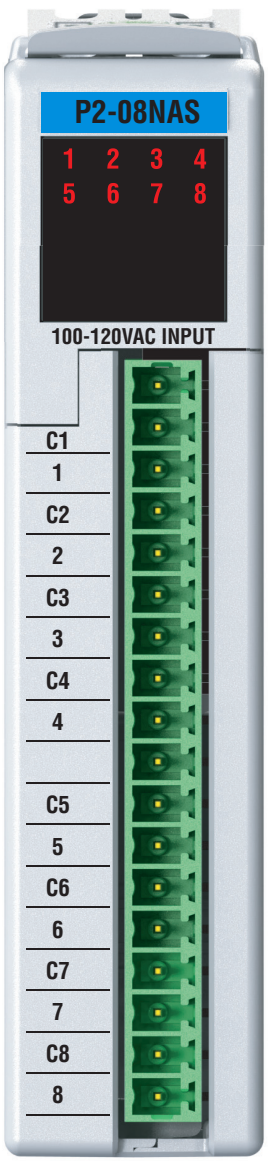

Terminal block sold separately

Input Specifications	
Inputs per Module	8
Rated Voltage	100–120 VAC
Operating Voltage Range	80–144 VAC
AC Frequency	47–63 Hz
Input Current (Typical)	8.5 mA @ 100VAC (50Hz) 10mA @ 100VAC (60Hz)
Maximum Input Current @ Temp	13mA @ 60°C (144VAC)
Input Impedance	12kΩ (50Hz), 12kΩ (60Hz)
ON Voltage Level	> 70VAC
OFF Voltage Level	< 20VAC
Minimum ON Current	5mA
Maximum OFF Current	2mA
OFF to ON Response	< 10ms
ON to OFF Response	< 25ms
Status Indicators	Logic side (8 points)
Commons	8 Isolated (1 point/common)

General Specifications	
Operating Temperature	0° to 60°C (32° to 140°F)
Storage Temperature	-20° to 70°C (-4° to 158°F)
Humidity	5 to 95% (non-condensing)
Environmental Air	No corrosive gases permitted
Vibration	IEC60068-2-6 (Test Fc)
Shock	IEC60068-2-27 (Test Ea)
Field to Logic Side Isolation	1800VAC applied for 1 second
Insulation Resistance	>10MΩ @ 500VDC
Heat Dissipation	600mW
Enclosure Type	Open equipment
Module Keying to Backplane	Electronic
Module Location	Any I/O slot in a Productivity2000 system.
Field Wiring	Use ZIPLink wiring system or removable terminal block (not included). See Wiring Solutions.
Connector Type (Sold separately)	18 position removable terminal block
Weight	90g (3.2 oz)
Agency Approvals**	UL 61010*2-201 file E139594, Canada & USA CE (EMC: EN61131-2*, SAFETY: EN61010-2-201)

**Meets EMC and Safety requirements. See the Declaration of Conformity for details.*
***To obtain the most current agency approval information, see the Agency Approval Checklist section on the specific component part number web page.*

We recommend using prewired ZIPLink cables and connection modules. See Wiring Solutions.
If you wish to hand-wire your module, a removable terminal block is sold separately. Order part number P2-RTB or P2-RTB-1.

NOTE: The most recent Productivity Suite software and firmware versions may be required to support new modules and new features.

AC Input Modules

P2-08NAS (cont'd)

Removable Terminal Block Specifications		
Part Number	***P2-RTB***	***P2-RTB-1***
Number of positions	18 screw terminals	18 push release terminals
Wire Range	30–16 AWG (0.051–1.31 mm²) Solid/stranded conductor 3/64 in (1.2 mm) insulation max. 1/4 in (6–7 mm) strip length	28–16 AWG (0.081–1.31 mm²) Solid/stranded conductor 3/64 in (1.2 mm) insulation max. 19/64 in (7–8 mm) strip length
Conductors	USE COPPER CONDUCTORS, 75ºC or equivalent.	
Screw Driver Width	0.1 in. (2.5 mm) maximum	NA
Screw Size	M2	N/A
Screw Torque	2.5 lb·in (0.28 N·m)	N/A

** Recommended screw driver: P/N TW-SD-MSL-1.*

Wiring Diagrams

100 - 120 VAC
50 - 60 Hz

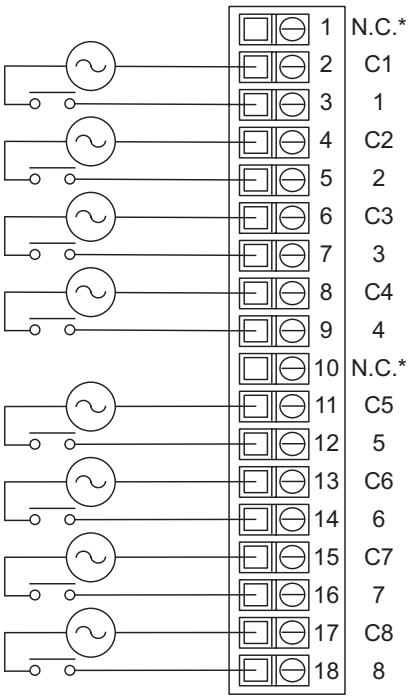

*N.C. = No Connection

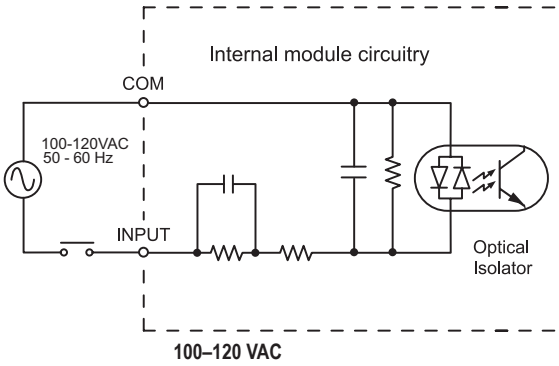

AC Input Modules

P2-16NA $154.00

AC Input
The P2-16NA AC Input Module provides sixteen 100–240 VAC inputs.

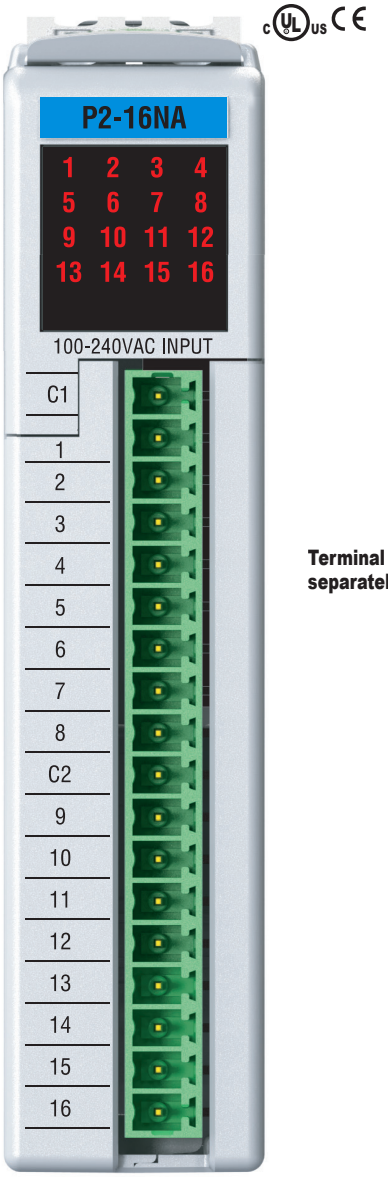

Terminal block sold separately

Input Specifications		
Inputs per Module		16
Operating Voltage Range (Tolerance)	CE	100–240 VAC (± 20%)
	UL	100–240 VAC (± 20%)
AC Frequency		47–63 Hz
Input Current (Typical)		8.5 mA @ 100VAC (50Hz) 10mA @ 100VAC (60Hz) 17mA @ 240VAC (50Hz) 20mA @ 240VAC (60Hz)
Maximum Input Current @ Temp		26mA @ 60°C (288VAC)
Input Impedance		15kΩ (50Hz), 12kΩ (60Hz)
ON Voltage Level		>70VAC
OFF Voltage Level		<20VAC
Minimum ON Current		5mA
Maximum OFF Current		2mA
OFF to ON Response		<10ms
ON to OFF Response		<25ms
Status Indicators		Logic side (16 points)
Commons		2 Isolated for 120V 2 Non-Isolated for 240V (external jumper required)

General Specifications	
Operating Temperature	0° to 60°C (32° to 140°F)
Storage Temperature	-20° to 70°C (-4° to 158°F)
Humidity	5 to 95% (non-condensing)
Environmental Air	No corrosive gases permitted
Vibration	IEC60068-2-6 (Test Fc)
Shock	IEC60068-2-27 (Test Ea)
Field to Logic Side Isolation	1800VAC applied for 1 second
Insulation Resistance	>10MΩ @ 500VDC
Heat Dissipation	600mW
Enclosure Type	Open equipment
Module Keying to Backplane	Electronic
Module Location	Any I/O slot in a Productivity2000 system
Field Wiring	Use ZIPLink wiring system or removable terminal block (not included). See Wiring Solutions.
Connector Type (Sold separately)	18 position removable terminal block
Weight	90g (3.2 oz)
Agency Approvals**	UL508 file E139594, Canada & USA CE (EN61131-2*)

**Meets EMC and Safety requirements. See the Declaration of Conformity for details.*
***To obtain the most current agency approval information, see the Agency Approval Checklist section on the specific component part number web page.*

We recommend using prewired ZIPLink cables and connection modules. See Wiring Solutions.
If you wish to hand-wire your module, a removable terminal block is sold separately. Order part number P2-RTB or P2-RTB-1.

AC Input Modules

P2-16NA (cont'd)

Removable Terminal Block Specifications		
Part Number	***P2-RTB***	***P2-RTB-1***
Number of positions	18 screw terminals	18 push release terminals
Wire Range	30–16 AWG (0.051–1.31 mm²) Solid/stranded conductor 3/64 in (1.2 mm) insulation max. 1/4 in (6–7 mm) strip length	28–16 AWG (0.081–1.31 mm²) Solid/stranded conductor 3/64 in (1.2 mm) insulation max. 19/64 in (7–8 mm) strip length
Conductors	USE COPPER CONDUCTORS, 75ºC or equivalent.	
Screw Driver Width	0.1 in. (2.5 mm) maximum	NA
Screw Size	M2	N/A
Screw Torque	2.5 lb·in (0.28 N·m)	N/A

** Recommended screw driver: P/N TW-SD-MSL-1.*

Wiring Diagrams

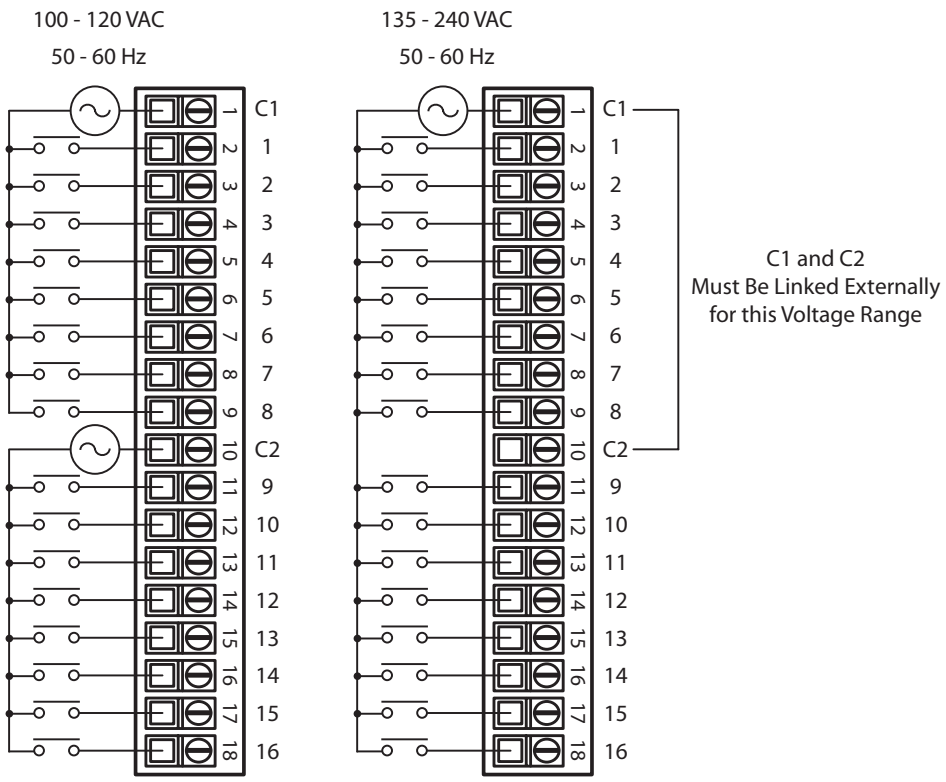

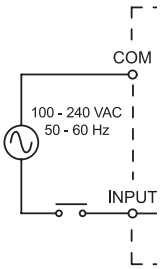

Internal Module Circuitry

DC Output Modules

P2-08TD1S $70.00

Sinking Output

The P2-08TD1S DC Output Module provides eight outputs, isolated four per common, that sink up to 2A per output from loads powered from 3.3–24 VDC supplies.

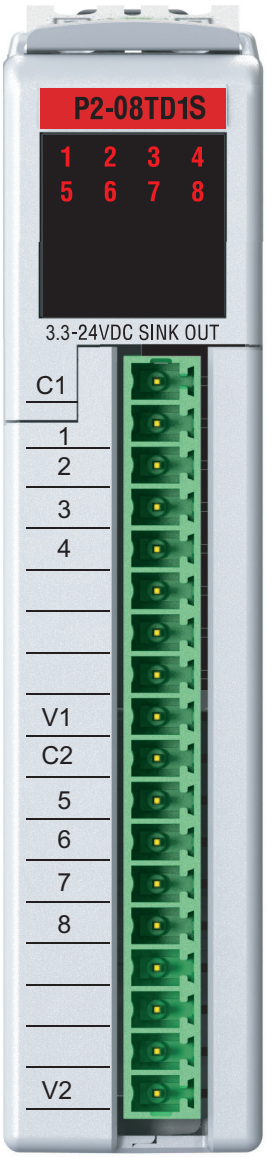

Terminal block sold separately

Output Specifications	
Outputs per Module	8 sinking
Output Type	N-channel MOSFET, open drain
Rated Voltage	3.3–24 VDC
Operating Voltage Range	2.8–30 VDC
Maximum Output Current	2A per point
Minimum Load Current	0.4 mA
Maximum Leakage Current	0.3 mA @ 30VDC
On Voltage Drop	0.2 VDC @ 2A
Maximum Inrush Current	4A for 40ms, 6A for 10ms
OFF to ON Response	≤0.5 ms
ON to OFF Response	≤0.5 ms
Status Indicators	Logic Side (8 points)
Commons	2 Isolated (4 points / common)
Fuses	None
External Power Supply Required	12–24 VDC (-15% / +20%) @ 12mA

General Specifications	
Operating Temperature	0° to 60°C (32° to 140°F)
Storage Temperature	-20° to 70°C (-4° to 158°F)
Humidity	5 to 95% (non-condensing)
Environmental Air	No corrosive gases permitted
Vibration	IEC60068-2-6 (Test Fc)
Shock	IEC60068-2-27 (Test Ea)
Field to Logic Side Isolation	1800VAC applied for 1 second
Insulation Resistance	>10MΩ @ 500VDC
Heat Dissipation	1800mW
Enclosure Type	Open equipment
Module Keying to Backplane	Electronic
Module Location	Any I/O slot in any Productivity2000 system.
Field Wiring	Use ZIPLink wiring system or removable terminal block (not included). See Wiring Solutions.
Connector Type (Sold separately)	18 Position, removable terminal block
Weight	98g (3.5 oz)
Agency Approvals**	UL 61010-2-201 file E139594, Canada & USA CE (EMC: EN61131-2*, SAFETY: EN61010-2-201)

**Meets EMC and Safety requirements. See the Declaration of Conformity for details.*
***To obtain the most current agency approval information, see the Agency Approval Checklist section on the specific component part number web page.*

We recommend using prewired *ZIP*Link cables and connection modules. See Wiring Solutions.
If you wish to hand-wire your module, a removable terminal block is sold separately. Order part number P2-RTB or P2-RTB-1.

NOTE: The most recent Productivity Suite software and firmware versions may be required to support new modules and new features.

DC Output Modules

P2-08TD1S (cont'd)

Removable Terminal Block Specifications		
Part Number	***P2-RTB***	***P2-RTB-1***
Number of positions	18 screw terminals	18 push release terminals
Wire Range	30–16 AWG (0.051–1.31 mm²) Solid/stranded conductor 3/64 in (1.2 mm) insulation max. 1/4 in (6–7 mm) strip length	28–16 AWG (0.081–1.31 mm²) Solid/stranded conductor 3/64 in (1.2 mm) insulation max. 19/64 in (7–8 mm) strip length
Conductors	USE COPPER CONDUCTORS, 75ºC or equivalent.	
Screw Driver Width	0.1 in. (2.5 mm) maximum	NA
Screw Size	M2	N/A
Screw Torque	2.5 lb·in (0.28 N·m)	N/A

** Recommended screw driver: P/N TW-SD-MSL-1.*

Wiring Diagrams

Single Power Source

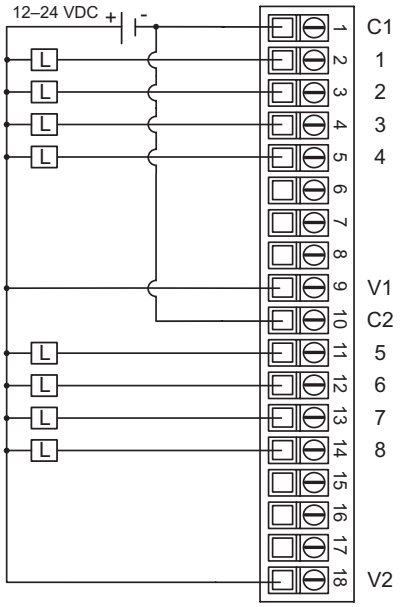

Single or Dual Power Source

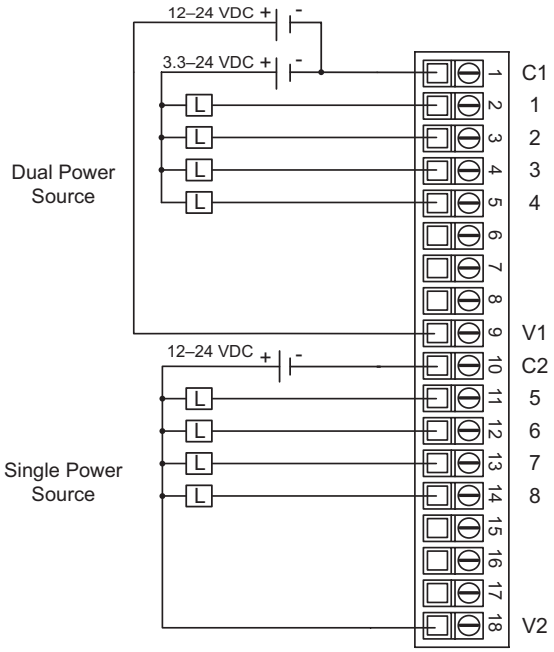

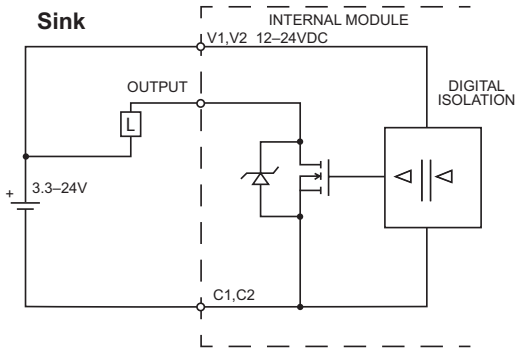

DC Output Modules

P2-08TD2S $70.00

Sourcing Output
The P2-08TD2S DC Output Module provides eight outputs, isolated four per common, that source up to 2A per output from 12–24 VDC supplies.

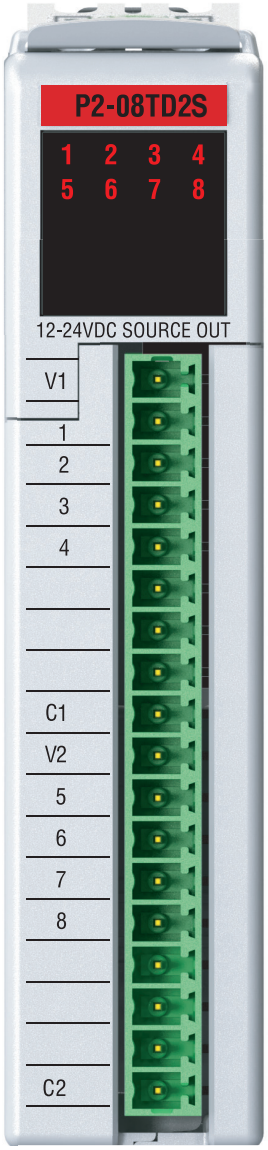

Terminal block sold separately

Output Specifications	
Outputs per Module	8 sourcing
Output Type	P-channel MOSFET, open source
Rated Voltage	12–24 VDC
Operating Voltage Range	10.2–30 VDC
Maximum Output Current	2A per point
Minimum Load Current	0.4 mA
Maximum Leakage Current	0.3 mA @ 30 VDC
On Voltage Drop	0.2 VDC @ 2A
Maximum Inrush Current	4A for 40ms, 6A for 10ms
OFF to ON Response	≤0.5 ms
ON to OFF Response	≤0.5 ms
Status Indicators	Logic Side (8 points)
Commons	2 Isolated (4 points / common)
Fuses	None
External Power Supply Required	12–24 VDC (-15% / +20%) @ 12mA

General Specifications	
Operating Temperature	0° to 60°C (32° to 140°F)
Storage Temperature	-20° to 70°C (-4° to 158°F)
Humidity	5 to 95% (non-condensing)
Environmental Air	No corrosive gases permitted
Vibration	IEC60068-2-6 (Test Fc)
Shock	IEC60068-2-27 (Test Ea)
Field to Logic Side Isolation	1800VAC applied for 1 second
Insulation Resistance	>10MΩ @ 500VDC
Heat Dissipation	2600mW
Enclosure Type	Open equipment
Module Keying to Backplane	Electronic
Module Location	Any I/O slot in any Productivity2000 system.
Field Wiring	Use ZIPLink wiring system or removable terminal block (not included). See Wiring Solutions.
Connector Type (Sold separately)	18 Position removable terminal block
Weight	98g (3.5 oz)
Agency Approvals**	UL 61010-2-201 file E139594, Canada & USA CE (EMC: EN61131-2*, SAFETY: EN61010-2-201)

**Meets EMC and Safety requirements. See the Declaration of Conformity for details.*
***To obtain the most current agency approval information, see the Agency Approval Checklist section on the specific component part number web page.*

NOTE: The most recent Productivity Suite software and firmware versions may be required to support new modules and new features.

We recommend using prewired ZIPLink cables and connection modules. See Wiring Solutions.
If you wish to hand-wire your module, a removable terminal block is sold separately. Order part number **P2-RTB** **or** **P2-RTB-1**.

DC Output Modules

P2-08TD2S (cont'd)

Removable Terminal Block Specifications		
Part Number	***P2-RTB***	***P2-RTB-1***
Number of positions	18 screw terminals	18 push release terminals
Wire Range	30–16 AWG (0.051–1.31 mm²) Solid/stranded conductor 3/64 in (1.2 mm) insulation max. 1/4 in (6–7 mm) strip length	28–16 AWG (0.081–1.31 mm²) Solid/stranded conductor 3/64 in (1.2 mm) insulation max. 19/64 in (7–8 mm) strip length
Conductors	USE COPPER CONDUCTORS, 75ºC or equivalent.	
Screw Driver Width	0.1 in. (2.5 mm) maximum	NA
Screw Size	M2	N/A
Screw Torque	2.5 lb·in (0.28 N·m)	N/A

** Recommended screw driver: P/N TW-SD-MSL-1.*

Wiring Diagrams

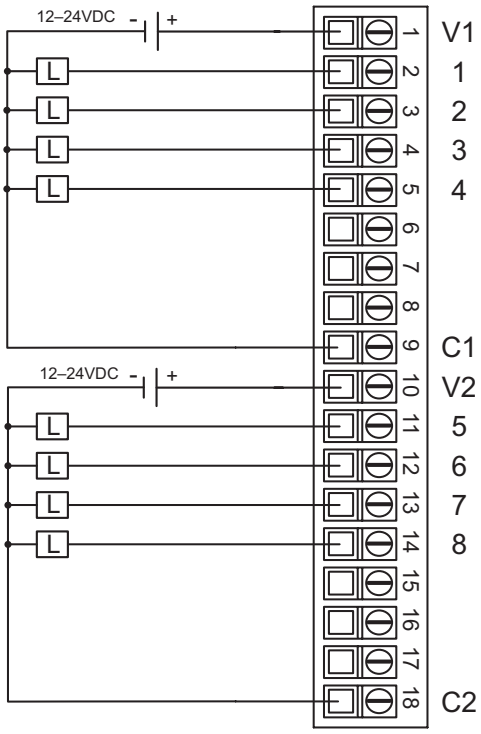

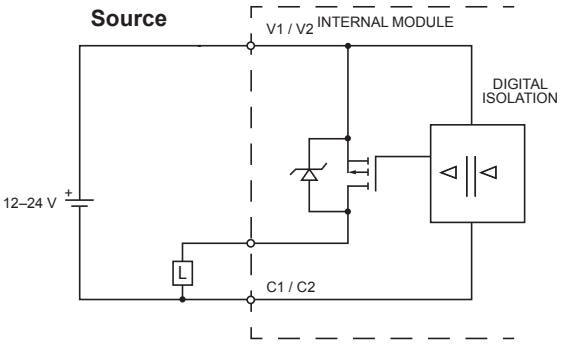

DC Output Modules

P2-15TD1 $97.00

Sinking Output

The P2-15TD1 DC Output Module provides fifteen outputs that sink up to 1A per output from loads powered from 3.3–24 VDC supplies.

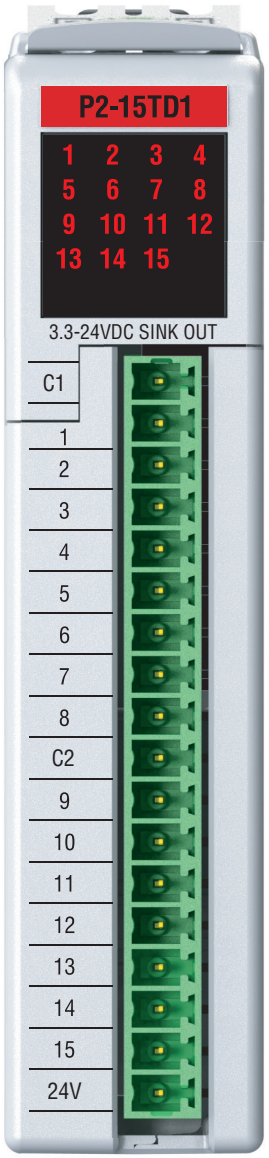

Terminal block sold separately

Output Specifications	
Outputs per Module	15 sinking
Output Type	N-channel MOSFET, open drain
Rated Voltage	3.3–24 VDC
Operating Voltage Range	2.8–30 VDC
Maximum Output Current	1A per point / 8A per common
Minimum Load Current	1mA
Maximum Leakage Current	0.3 mA @ 30 VDC
On Voltage Drop	0.18 VDC @ 1A
Maximum Inrush Current	4A for 40ms, 6A for 10ms
OFF to ON Response	≤0.5 ms
ON to OFF Response	≤0.5 ms
Status Indicators	Logic Side (15 points)
Commons	2 non-isolated
Fuses	None
External Power Supply Required	12–24 VDC (-15% / +20%) @ 22mA

General Specifications	
Operating Temperature	0° to 60°C (32° to 140°F)
Storage Temperature	-20° to 70°C (-4° to 158°F)
Humidity	5 to 95% (non-condensing)
Environmental Air	No corrosive gases permitted
Vibration	IEC60068-2-6 (Test Fc)
Shock	IEC60068-2-27 (Test Ea)
Field to Logic Side Isolation	1800VAC applied for 1 second
Insulation Resistance	>10MΩ @ 500VDC
Heat Dissipation	1800mW
Enclosure Type	Open equipment
Module Keying to Backplane	Electronic
Module Location	Any I/O slot in any Productivity2000 system.
Field Wiring	Use ZIPLink wiring system or removable terminal block (not included). See Wiring Solutions.
Connector Type (Sold separately)	18 Position, removable terminal block
Weight	100g (3.5 oz)
Agency Approvals**	UL 61010-2-201 file E139594, Canada & USA CE (EMC: EN61131-2*, SAFETY: EN61010-2-201)

**Meets EMC and Safety requirements. See the Declaration of Conformity for details.*
***To obtain the most current agency approval information, see the Agency Approval Checklist section on the specific component part number web page.*

NOTE: The most recent Productivity Suite software and firmware versions may be required to support new modules and new features.

We recommend using prewired ZIPLink cables and connection modules. See Wiring Solutions.
If you wish to hand-wire your module, a removable terminal block is sold separately.
Order part number P2-RTB or P2-RTB-1.

DC Output Modules

P2-15TD1 (cont'd)

Removable Terminal Block Specifications		
Part Number	***P2-RTB***	***P2-RTB-1***
Number of positions	18 screw terminals	18 push release terminals
Wire Range	30–16 AWG (0.051–1.31 mm²) Solid/stranded conductor 3/64 in (1.2 mm) insulation max. 1/4 in (6–7 mm) strip length	28–16 AWG (0.081–1.31 mm²) Solid/stranded conductor 3/64 in (1.2 mm) insulation max. 19/64 in (7–8 mm) strip length
Conductors	USE COPPER CONDUCTORS, 75ºC or equivalent.	
Screw Driver Width	0.1 in. (2.5 mm) maximum	NA
Screw Size	M2	N/A
Screw Torque	2.5 lb·in (0.28 N·m)	N/A

** Recommended screw driver: P/N TW-SD-MSL-1.*

Wiring Diagrams

Single Power Source

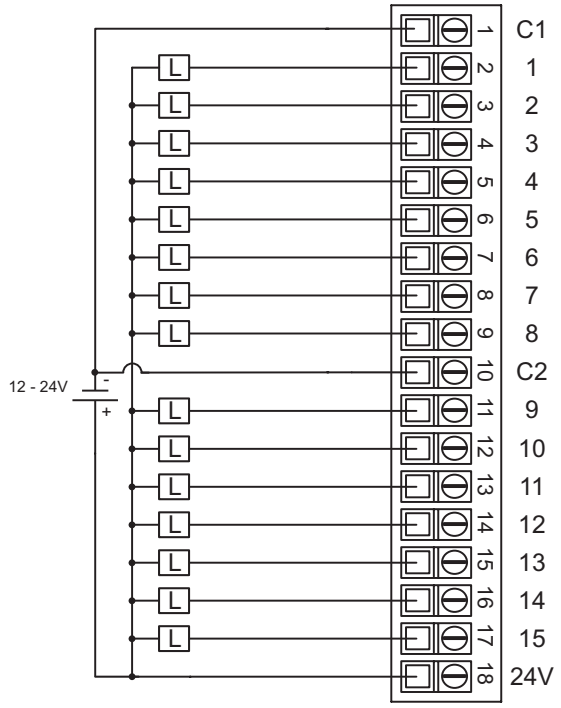

Dual Power Source

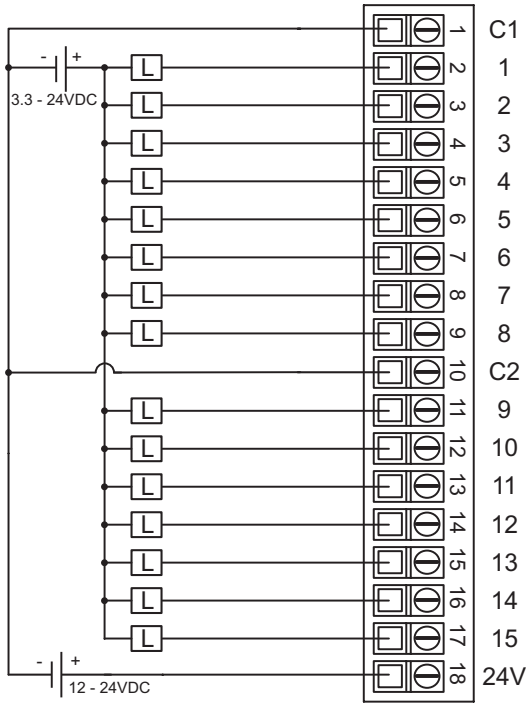

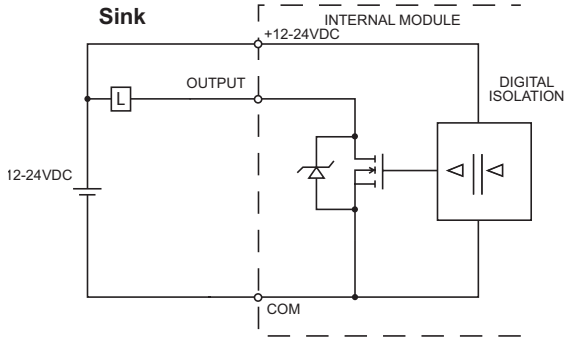

DC Output Modules

P2-15TD2 $95.00

Sourcing Output
The P2-15TD2 DC Output Module provides fifteen outputs that source up to 1A per output from 12–24 VDC supplies.

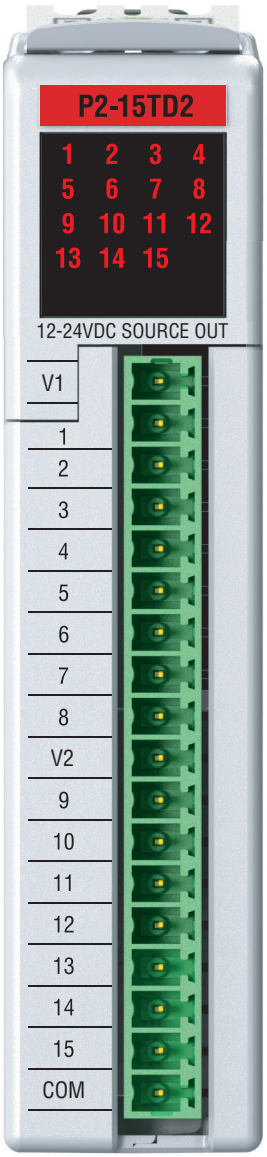

Terminal block sold separately

Output Specifications	
Outputs per Module	15 sourcing
Output Type	P-channel MOSFET, open source
Rated Voltage	12–24 VDC
Operating Voltage Range	10.2–28.8 VDC
Maximum Output Current	1A per point / 8A per common
Minimum Load Current	1mA
Maximum Leakage Current	0.3 mA @ 28.8 VDC
On Voltage Drop	0.18 VDC @ 1A
Maximum Inrush Current	4A for 40ms, 6A for 10ms
OFF to ON Response	≤0.5 ms
ON to OFF Response	≤0.5 ms
Status Indicators	Logic Side (15 points)
Commons	1
Fuses	None
External Power Supply Required	12–24 VDC (-15% / +20%) @ 22mA

General Specifications	
Operating Temperature	0° to 60°C (32° to 140°F)
Storage Temperature	-20° to 70°C (-4° to 158°F)
Humidity	5 to 95% (non-condensing)
Environmental Air	No corrosive gases permitted
Vibration	IEC60068-2-6 (Test Fc)
Shock	IEC60068-2-27 (Test Ea)
Field to Logic Side Isolation	1800VAC applied for 1 second
Insulation Resistance	>10MΩ @ 500VDC
Heat Dissipation	2600mW
Enclosure Type	Open equipment
Module Keying to Backplane	Electronic
Module Location	Any I/O slot in any Productivity2000 system.
Field Wiring	Use ZIPLink wiring system or removable terminal block (not included). See Wiring Solutions.
Connector Type (Sold separately)	18 Position, removable terminal block
Weight	100g (3.5 oz)
Agency Approvals*	UL 61010-2-201 file E139594, Canada & USA CE (EN61131-2*, EMC, EN 61010-1 and SAFETY: EN61010-2-201)

**Meets EMC and Safety requirements. See the Declaration of Conformity for details.*
***To obtain the most current agency approval information, see the Agency Approval Checklist section on the specific component part number web page.*

NOTE: The most recent Productivity Suite software and firmware versions may be required to support new modules and new features.

We recommend using prewired ZIPLink cables and connection modules. See Wiring Solutions.
If you wish to hand-wire your module, a removable terminal block is sold separately. Order part number P2-RTB or P2-RTB-1.

DC Output Modules

P2-15TD2 (cont'd)

Removable Terminal Block Specifications		
Part Number	***P2-RTB***	***P2-RTB-1***
Number of positions	18 screw terminals	18 push release terminals
Wire Range	30–16 AWG (0.051–1.31 mm²) Solid/stranded conductor 3/64 in (1.2 mm) insulation max. 1/4 in (6–7 mm) strip length	28–16 AWG (0.081–1.31 mm²) Solid/stranded conductor 3/64 in (1.2 mm) insulation max. 19/64 in (7–8 mm) strip length
Conductors	USE COPPER CONDUCTORS, 75ºC or equivalent.	
Screw Driver Width	0.1 in. (2.5 mm) maximum	NA
Screw Size	M2	N/A
Screw Torque	2.5 lb·in (0.28 N·m)	N/A

** Recommended screw driver: P/N TW-SD-MSL-1.*

Wiring Diagrams

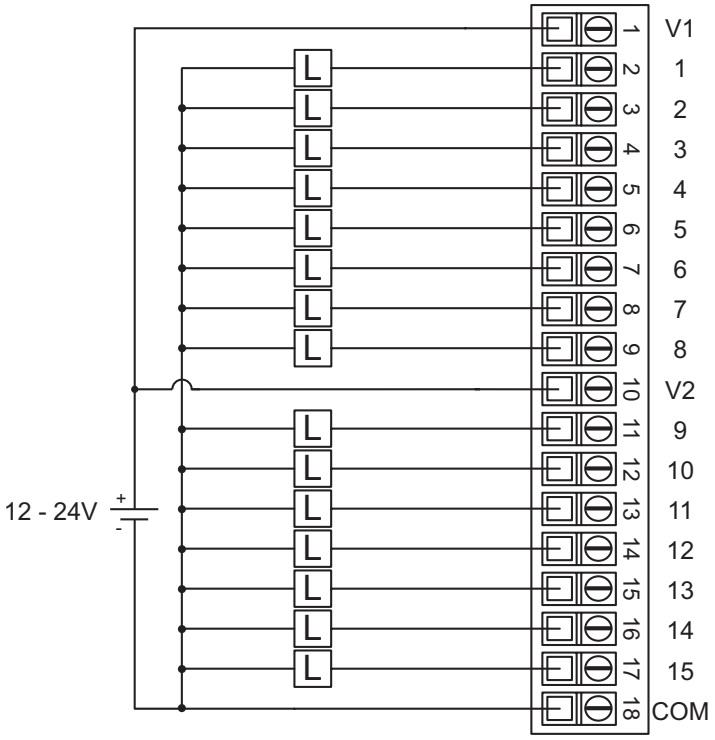

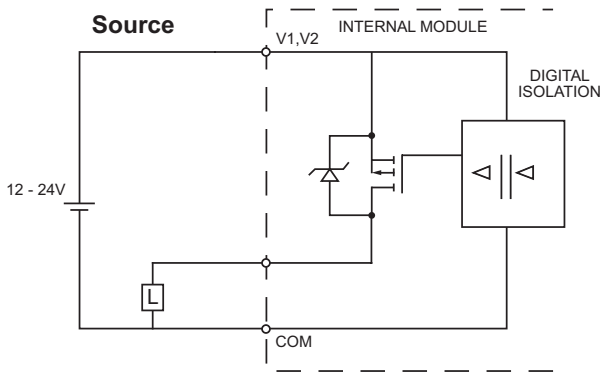

DC Output Modules

P2-08TD1P $60.00

Sinking Output

The P2-08TD1P DC Output Module provides eight 12–24 VDC sinking outputs with short-circuit and overload protection.

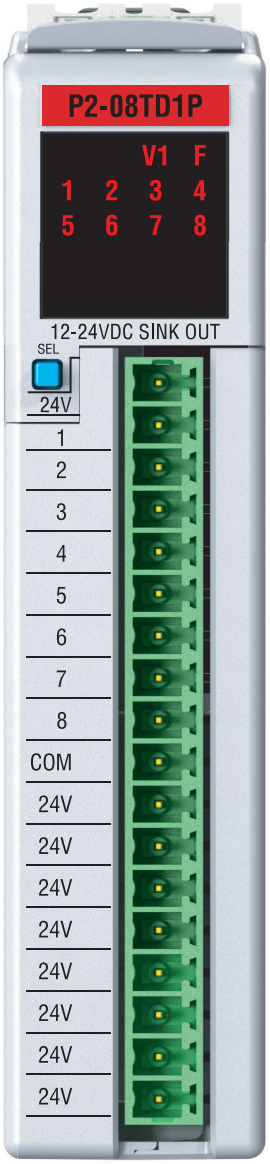

Terminal block sold separately

We recommend using prewired ZIPLink cables and connection modules. See Wiring Solutions.
If you wish to hand-wire your module, a removable terminal block is sold separately. Order part number P2-RTB or P2-RTB-1.

This module can be used with ZIPLINK CONNECTION SYSTEMS

Output Specifications

Outputs per Module	8 sinking
Rated Voltage	12–24 VDC
Operating Voltage Range (Tolerance)	10.2–26.4 VDC
Maximum Output Current	0.25 A continuous
On Voltage Drop	0.5 VDC
Maximum Inrush Current	Self-limited
OFF to ON Response	0.5 ms
ON to OFF Response	0.5 ms
Overcurrent Trip	0.6 A min., 1.2 A max. >50ms duration
Minimum Load Current to Avoid Open Load Fault Detection	113µA
Maximum Leakage Current	135µA 10.2–26.4 VDC
Over-temperature Shutdown	Independent to each output
Load Resistance to Avoid Open Load Fault Detection	<58kΩ
Status Indicators	Logic Side (8 points)
External 24V Error Indicator	Logic Side (1 points)
Fault Condition Indicator	Logic Side (8 points)
Commons	1
Fuses	None
External DC Power Required	24VDC @ 30mA

Note 1: *Open Load Fault is always enabled, but is only valid when output is OFF. If Open Load Fault happens while output is ON, fault will not appear until you turn OFF output.*
Note 2: *The SEL button cycles between the output status and fault status. If the "F" LED is OFF the numbered LEDs are showing output status. If the "F" LED is ON the numbered LEDs are showing fault status of each output. The "V1" LED is independent of fault or output display.*

General Specifications

Operating Temperature	0° to 60°C (32° to 140°F)
Storage Temperature	-20° to 70°C (-4° to 158°F)
Humidity	5 to 95% (non-condensing)
Environmental Air	No corrosive gases permitted
Vibration	IEC60068-2-6 (Test Fc)
Shock	IEC60068-2-27 (Test Ea)
Field to Logic Side Isolation	1800VAC applied for 1 second
Insulation Resistance	>10MΩ @ 500VDC
Heat Dissipation	1.8 W
Enclosure Type	Open equipment
Module Keying to Backplane	Electronic
Module Location	Any I/O slot in any Productivity2000 system
Field Wiring	Use ZIPLink wiring system or removable terminal block (not included). See Wiring Solutions.
Connector Type (Sold separately)	18-pin Removable Terminal Block
Weight	97.6 g (3.4 oz)
Agency Approvals**	UL508 file E139594, Canada & USA CE (EN61131-2*)

**Meets EMC and Safety requirements. See the Declaration of Conformity for details.*
***To obtain the most current agency approval information, see the Agency Approval Checklist section on the specific component part number web page.*

LED Status

Fault Condition	Fault Status Indication	Operation to Reset Fault
Missing External 24VDC	V1 LED is ON	Apply external 24VDC
Open Load (Note 1)	"F" LED is ON (Note 2)	Connect the load
Over Temperature or Over Load Current		Turn the output OFF or cycle power

DC Output Modules

P2-08TD1P (cont'd)

Removable Terminal Block Specifications		
Part Number	***P2-RTB***	***P2-RTB-1***
Number of positions	18 screw terminals	18 push release terminals
Wire Range	30–16 AWG (0.051–1.31 mm²) Solid/stranded conductor 3/64 in (1.2 mm) insulation max. 1/4 in (6–7 mm) strip length	28–16 AWG (0.081–1.31 mm²) Solid/stranded conductor 3/64 in (1.2 mm) insulation max. 19/64 in (7–8 mm) strip length
Conductors	USE COPPER CONDUCTORS, 75ºC or equivalent.	
Screw Driver Width	0.1 in. (2.5 mm) maximum	NA
Screw Size	M2	N/A
Screw Torque	2.5 lb·in (0.28 N·m)	N/A

** Recommended screw driver: P/N TW-SD-MSL-1.*

Wiring Diagrams

SINGLE POWER SOURCE

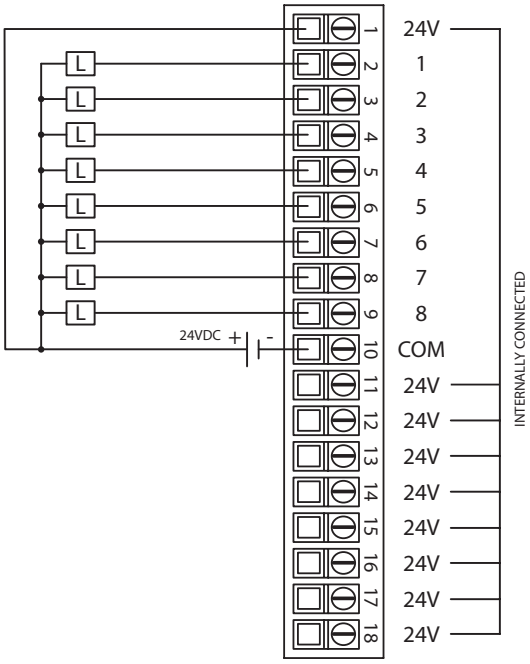

DUAL POWER SOURCE

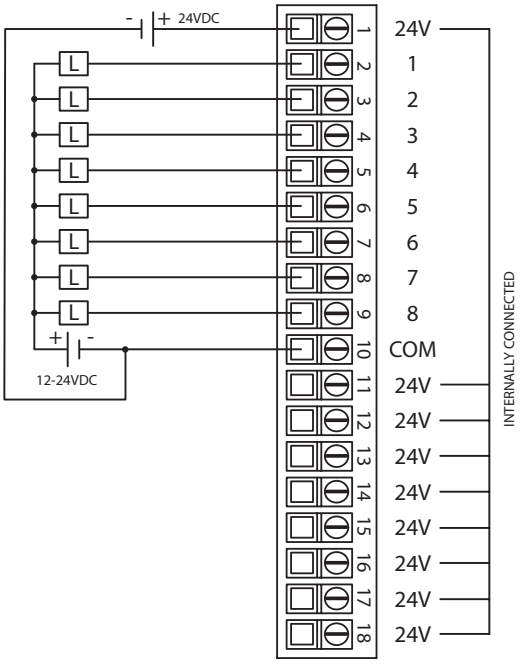

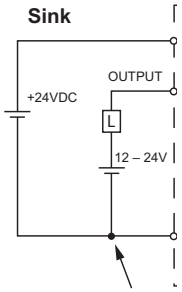

Internal Module Circuitry Sinking

COMs of both Power Supplies are connected.

NOTE: If two separate power supplies are used to supply module control logic and output, grounds from both power supplies must be connected. For testing outputs, see note in P2-USER-M manual under P2-08TD1P wiring.

DC Output Modules

P2-08TD2P $60.00

Sourcing Output
The P2-08TD2P DC Output Module provides eight 24VDC sourcing outputs with short-circuit and overload protection.

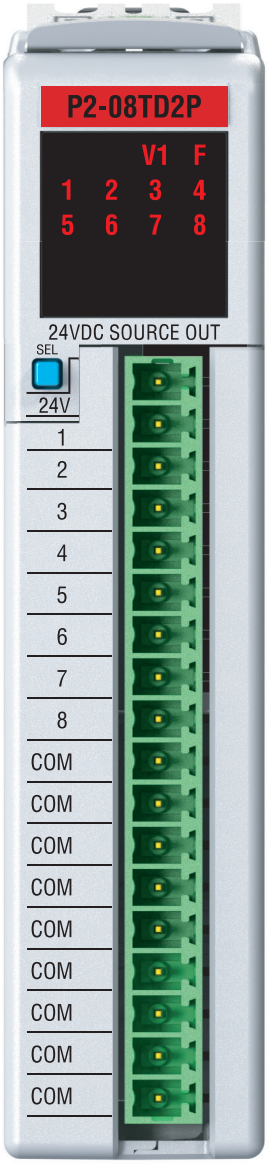

Terminal block sold separately.

We recommend using prewired ZIPLink cables and connection modules. See Wiring Solutions. If you wish to hand-wire your module, a removable terminal block is sold separately. Order part number P2-RTB or P2-RTB-1.

Output Specifications	
Outputs per Module	8 sourcing
Voltage Rating	24VDC
Operating Voltage Range	21.6–26.4 VDC
Maximum Output Current	0.25 A
On Voltage Drop	0.7 VDC
Maximum Inrush Current	Self-limited
OFF to ON Response	0.5 ms
ON to OFF Response	0.5 ms
Overcurrent Trip	0.6 A min., 1.2 A max.>50ms duration
Minimum Load Current to Avoid Open Load Fault Detection	113µA
Maximum Leakage Current	160µA @ 21.6–26.4 VDC
Over Temperature Shutdown	Independent to each output
Load Resistance to Avoid Open Load Fault Detection	<58kΩ
Status Indicators	Logic Side (8 points)
External 24V Error Indicator	Logic Side (1 points)
Fault Condition Indicator	Logic Side (8 points)
Commons	9 (non-isolated)
Fuses	None
External DC Power Required	24VDC @ 30mA

General Specifications	
Operating Temperature	0° to 60°C (32° to 140°F)
Storage Temperature	-20° to 70°C (-4° to 158°F)
Humidity	5 to 95% (non-condensing)
Environmental Air	No corrosive gases permitted
Vibration	IEC60068-2-6 (Test Fc)
Shock	IEC60068-2-27 (Test Ea)
Field to Logic Side Isolation	1800VAC applied for 1 second
Insulation Resistance	>10MΩ @ 500VDC
Heat Dissipation	1.8 W
Enclosure Type	Open equipment
Module Keying to Backplane	Electronic
Module Location	Any I/O slot in a Productivity2000 system
Field Wiring	Use ZIPLink wiring system or removable terminal block (not included). See Wiring Solutions.
Connector Type (Sold separately)	18 Position Removable Terminal Block
Weight	97.6 g (3.4 oz)
Agency Approvals**	UL508 file E139594, Canada & USA CE (EN61131-2*)

**Meets EMC and Safety requirements. See the Declaration of Conformity for details.*
***To obtain the most current agency approval information, see the Agency Approval Checklist section on the specific component part number web page.*

DC Output Modules

P2-08TD2P (cont'd)

LED Status		
Fault Condition	***Fault Status Indication***	***Operation to Reset Fault***
Missing External 24VDC	'V1' LED is ON	Apply external 24VDC
Open Load (Note 1)	'F' LED is ON (Note 2)	Connect the load
Over Temperature or Over Load Current		Turn the output OFF or cycle power

Note 1: Open Load Fault is always enabled, but is only valid when output is OFF. If Open Load Fault happens while output is ON, fault will not appear until you turn OFF output.
Note 2: The SEL button cycles between the output status and fault status. If the "F" LED is OFF the numbered LEDs are showing output status. If the "F" LED is ON the numbered LEDs are showing fault status of each output. The "V1" LED is independent of fault or output display.

Removable Terminal Block Specifications		
Part Number	***P2-RTB***	***P2-RTB-1***
Number of positions	18 screw terminals	18 push release terminals
Wire Range	30–16 AWG (0.051–1.31 mm²) Solid/stranded conductor 3/64 in (1.2 mm) insulation max. 1/4 in (6–7 mm) strip length	28–16 AWG (0.081–1.31 mm²) Solid/stranded conductor 3/64 in (1.2 mm) insulation max. 19/64 in (7–8 mm) strip length
Conductors	USE COPPER CONDUCTORS, 75ºC or equivalent.	
Screw Driver Width	0.1 in. (2.5 mm) maximum	NA
Screw Size	M2	N/A
Screw Torque	2.5 lb·in (0.28 N·m)	N/A

** Recommended screw driver: P/N TW-SD-MSL-1.*

Wiring Diagrams

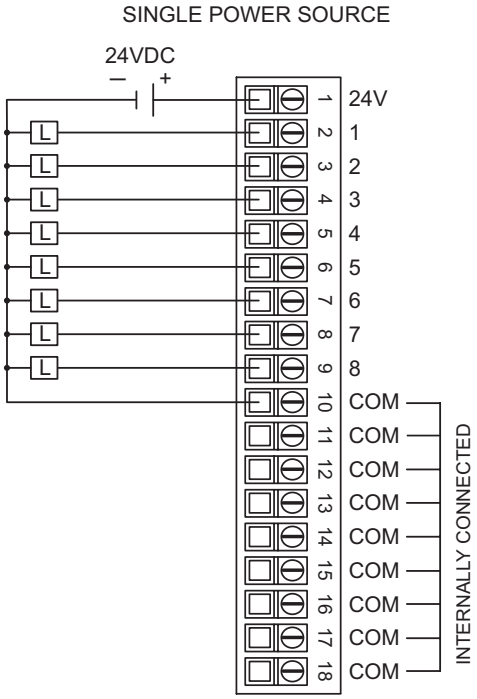

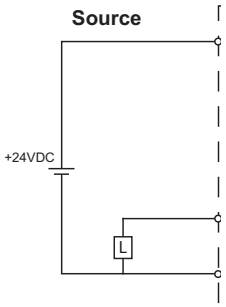

Internal Module Circuitry Sourcing

DC Output Modules

P2-16TD1P $101.00

Sinking Output

The P2-16TD1P DC Output Module provides sixteen 12–24 VDC sinking outputs with short-circuit and overload protection.

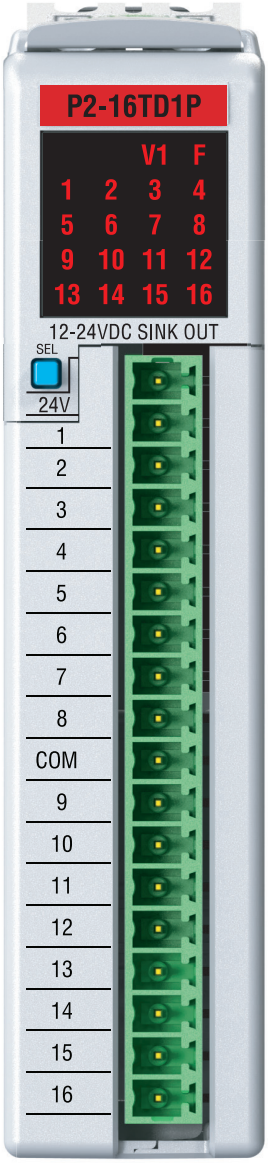

Terminal block sold separately

Output Specifications	
Outputs per Module	16 sinking
Voltage Rating	12–24 VDC
Operating Voltage Range	10.2–26.4 VDC
Maximum Output Current	0.25 A continuous
On Voltage Drop	0.5 VDC
Maximum Inrush Current	Self-limited
OFF to ON Response	0.5 ms
ON to OFF Response	0.5 ms
Overcurrent Trip	0.6 A min., 1.2 A max.>50ms duration
Minimum Load Current to Avoid Open Load Fault Detection	113µA
Maximum Leakage Current	135µA @ 10.2–26.4 VDC
Over-temperature Shutdown	Independent to each output
Load Resistance to Avoid Open Load Fault Detection	<58kΩ
Status Indicators	Logic Side (16 points)
External 24V Error Indicator	Logic Side (1 points)
Fault Condition Indicator	Logic Side (16 points)
Commons	1
Fuses	None
External DC Power Required	24VDC @ 60mA

LED Status		
Fault Condition	***Fault Status Indication***	***Operation to Reset Fault***
Missing External 24VDC	V1 LED is ON	Apply external 24VDC
Open Load (Note 1)	"F" LED is ON (Note 2)	Connect the load
Over Temperature or Over Load Current		Turn the output OFF or cycle power

Note 1: Open Load Fault is always enabled, but is only valid when output is OFF. If Open Load Fault happens while output is ON, fault will not appear until you turn OFF output.

Note 2: The SEL button cycles between the output status and fault status. If the "F" LED is OFF the numbered LEDs are showing output status. If the "F" LED is ON the numbered LEDs are showing fault status of each output. The "V1" LED is independent of fault or output display.

We recommend using prewired ZIPLink cables and connection modules. See Wiring Solutions. If you wish to hand-wire your module, a removable terminal block is sold separately. Order part number P2-RTB or P2-RTB-1.

DC Output Modules

P2-16TD1P (cont'd)

General Specifications	
Operating Temperature	0° to 60°C (32° to 140°F)
Storage Temperature	-20° to 70°C (-4° to 158°F)
Humidity	5 to 95% (non-condensing)
Environmental Air	No corrosive gases permitted
Vibration	IEC60068-2-6 (Test Fc)
Shock	IEC60068-2-27 (Test Ea)
Field to Logic Side Isolation	1800VAC applied for 1 second
Insulation Resistance	>10MΩ @ 500VDC
Heat Dissipation	1.8 W
Enclosure Type	Open equipment
Module Keying to Backplane	Electronic
Module Location	Any I/O slot in a Productivity2000 system.
Field Wiring	Use ZIPLink wiring system or removable terminal block (not included). See Wiring Solutions.
Connector Type (Sold separately)	18 Position Removable Terminal Block
Weight	97.4 g (3.4 oz)
Agency Approvals*	UL508 file E139594, Canada & USA CE (EN61131-2*)

**Meets EMC and Safety requirements. See the Declaration of Conformity for details.*
***To obtain the most current agency approval information, see the Agency Approval Checklist section on the specific component part number web page.*

Removable Terminal Block Specifications		
Part Number	***P2-RTB***	***P2-RTB-1***
Number of positions	18 screw terminals	18 push release terminals
Wire Range	30–16 AWG (0.051–1.31 mm²) Solid/stranded conductor 3/64 in (1.2 mm) insulation max. 1/4 in (6–7 mm) strip length	28–16 AWG (0.081–1.31 mm²) Solid/stranded conductor 3/64 in (1.2 mm) insulation max. 19/64 in (7–8 mm) strip length
Conductors	USE COPPER CONDUCTORS, 75ºC or equivalent.	
Screw Driver Width	0.1 in. (2.5 mm) maximum	NA
Screw Size	M2	N/A
Screw Torque	2.5 lb·in (0.28 N·m)	N/A

** Recommended screw driver: P/N TW-SD-MSL-1.*

DC Output Modules

P2-16TD1P (cont'd)

Wiring Diagrams

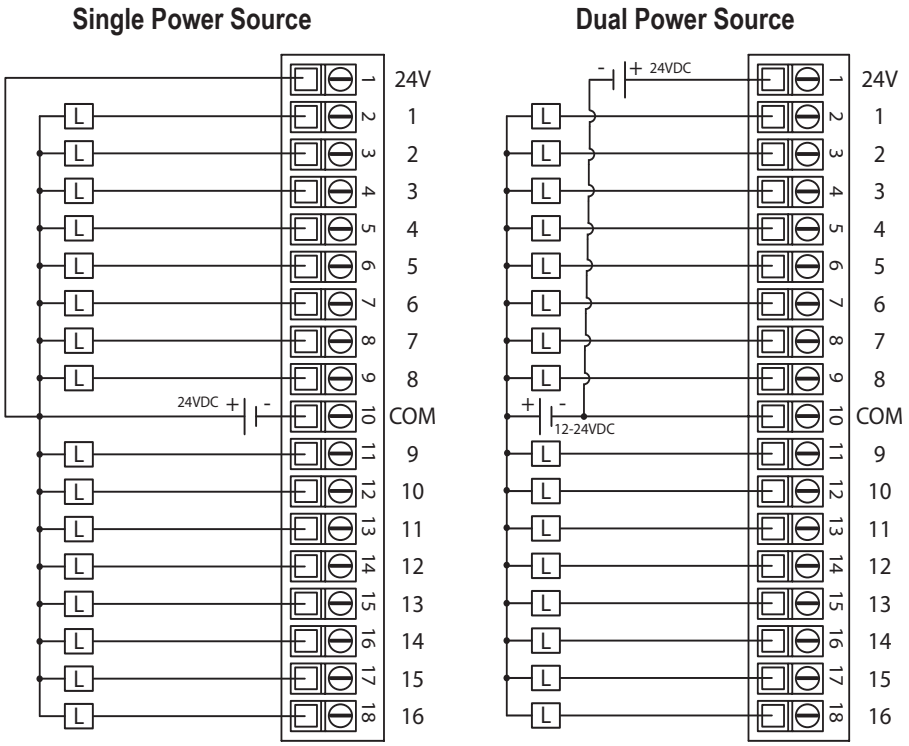

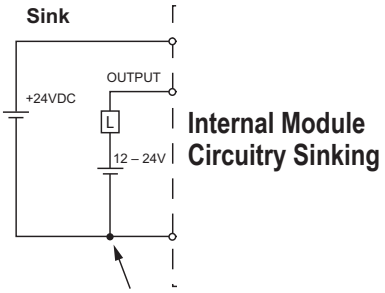

COMs of both Power Supplies are connected.

NOTE: If two separate power supplies are used to supply module control logic and output, common from both power supplies must be connected. For testing outputs, see note in P2-USER-M manual under P2-16TD1P wiring.

DC Output Modules

P2-16TD2P $101.00

Sourcing Output
The P2-16TD2P DC Output Module provides sixteen 24VDC sourcing outputs with short-circuit and overload protection.

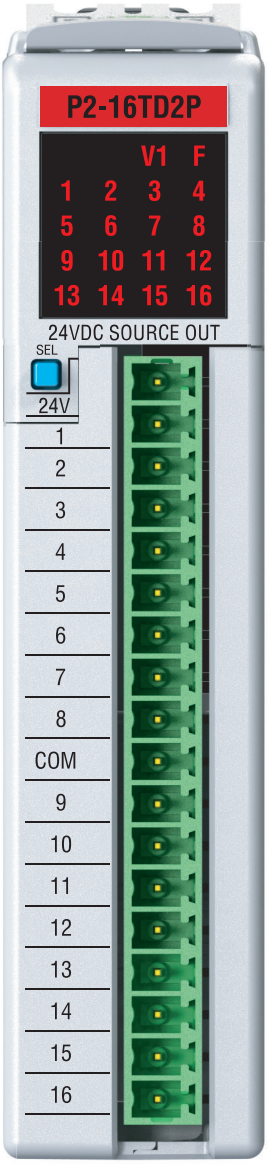

Terminal block sold separately

Output Specifications	
Outputs per Module	16 sourcing
Voltage Rating	24VDC
Operating Voltage Range	21.6–26.4 VDC
Maximum Output Current	0.25 A continuous
On Voltage Drop	0.7 VDC
Maximum Inrush Current	Self-limited
OFF to ON Response	0.5 ms
ON to OFF Response	0.5 ms
Overcurrent Trip	0.6 A min., 1.2 A max.>50ms duration
Minimum Load Current to Avoid Open Load Fault Detection	113µA
Maximum Leakage Current	160µA @ 21.6–26.4 VDC
Overtemperature Shutdown	Independent to each output
Load Resistance to Avoid Open Load Fault Detection	<58kΩ
Status Indicators	Logic Side (16 points)
External 24V Error Indicator	Logic Side (1 point)
Fault Condition Indicator	Logic Side (16 points)
Commons	1
Fuses	None
External DC Power Required	24VDC @ 60mA

General Specifications	
Operating Temperature	0° to 60°C (32° to 140°F)
Storage Temperature	-20° to 70°C (-4° to 158°F)
Humidity	5 to 95% (non-condensing)
Environmental Air	No corrosive gases permitted
Vibration	IEC60068-2-6 (Test Fc)
Shock	IEC60068-2-27 (Test Ea)
Field to Logic Side Isolation	1800VAC applied for 1 second
Insulation Resistance	>10MΩ @ 500VDC
Heat Dissipation	2.6 W
Enclosure Type	Open equipment
Module Keying to Backplane	Electronic
Module Location	Any I/O slot in a Productivity2000 system.
Field Wiring	Use ZIPLink wiring system or removable terminal block (not included). See Wiring Solutions.
Connector Type (Sold separately)	18 Position Removable Terminal Block
Weight	97.0 g (3.4 oz)
Agency Approvals**	UL508 file E139594, Canada & USA CE (EN61131-2*)

**Meets EMC and Safety requirements. See the Declaration of Conformity for details.*
***To obtain the most current agency approval information, see the Agency Approval Checklist section on the specific component part number web page.*

We recommend using prewired ZIPLink cables and connection modules. See Wiring Solutions.
If you wish to hand-wire your module, a removable terminal block is sold separately. Order part number P2-RTB or P2-RTB-1.

LED Status		
Fault Condition	***Fault Status Indication***	***Operation to Reset Fault***
Missing External 24VDC	'V1' LED is ON	Apply external 24VDC
Open Load (Note 1)	'F' LED is ON (Note 2)	Connect the load
Over Temperature or Over Load Current		Turn the output OFF or cycle power

Note 1: Open Load Fault is always enabled, but is only valid when output is OFF. If Open Load Fault happens while output is ON, fault will not appear until output turns OFF.
Note 2: The SEL button cycles between the output status and fault status. If the "F" LED is OFF the numbered LEDs are showing output status. If the "F" LED is ON the numbered LEDs are showing fault status of each output. The "V1" LED is independent of fault or output display.

DC Output Modules

P2-16TD2P (cont'd)

Removable Terminal Block Specifications		
Part Number	***P2-RTB***	***P2-RTB-1***
Number of positions	18 screw terminals	18 push release terminals
Wire Range	30–16 AWG (0.051–1.31 mm²) Solid/stranded conductor 3/64 in (1.2 mm) insulation max. 1/4 in (6–7 mm) strip length	28–16 AWG (0.081–1.31 mm²) Solid/stranded conductor 3/64 in (1.2 mm) insulation max. 19/64 in (7–8 mm) strip length
Conductors	USE COPPER CONDUCTORS, 75ºC or equivalent.	
Screw Driver Width	0.1 in. (2.5 mm) maximum	NA
Screw Size	M2	N/A
Screw Torque	2.5 lb·in (0.28 N·m)	N/A

** Recommended screw driver: P/N TW-SD-MSL-1.*

Wiring Diagrams

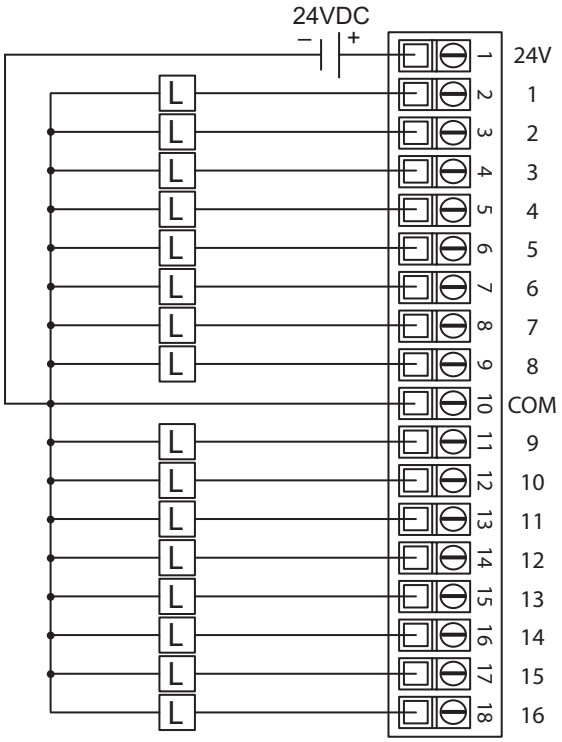

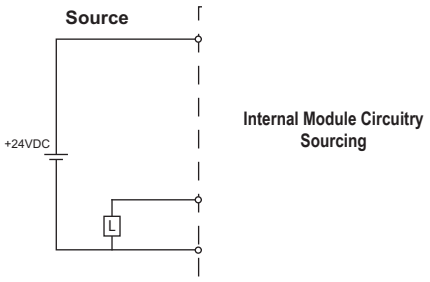

DC Output Modules

P2-16TD-TTL $116.00

Sourcing Output

The P2-16TD-TTL DC Output Module provides sixteen 5V sourcing outputs for use with the Productivty2000 System.

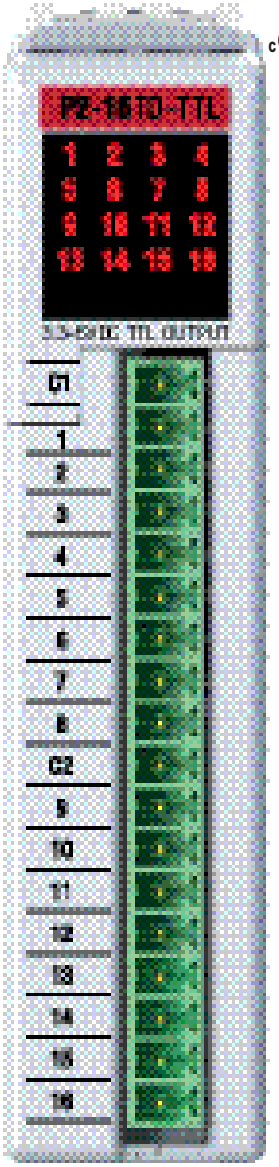

Terminal block sold separately

Output Specifications	
Outputs per Module	16 sourcing
Output Type	TTL Driver
Voltage Rating	5V
Operating Voltage Range	5V ±2%
Minimum Output Current	0µA
Maximum Output Current	20mA per point or 100mA total
On Voltage Drop	0.2 V @ Max Load
Maximum Leakage Current	±1µA
OFF to ON Response	≤ 0.5 ms
ON to OFF Response	≤ 0.5 ms
Status Indicators	Logic Side (16 points)
Commons	2 isolated (8 point/common)
Protection Circuit	None
External Power Supply Required	None

General Specifications	
Operating Temperature	0° to 60°C (32° to 140°F)
Storage Temperature	-20° to 70°C (-4° to 158°F)
Humidity	5 to 95% (non-condensing)
Altitude	2,000 meters, max.
Pollution Degree	2
Environmental Air	No corrosive gases permitted
Vibration	IEC60068-2-6 (Test Fc)
Shock	IEC60068-2-27 (Test Ea)
Overvoltage Category	II
Field to Logic Side Isolation	1750VDC applied for 5 second 420VDC applied for 1 minute
Insulation Resistance	>10MΩ @ 500VDC
Heat Dissipation	1420mW
Enclosure Type	Open equipment
Module Keying to Backplane	Electronic
Module Location	Any I/O slot in a Productivity2000 system.
Field Wiring	Use ZIPLink wiring system or removable terminal block (not included). See Wiring Solutions.
Connector Type (Sold separately)	18 Position Removable Terminal Block
Weight	104g (3.66 oz)
Agency Approvals**	UL 61010-1 and UL 61010-2-201 File E139594, Canada & USA CE (EN61131-2 EMC, EN 61010-1 and EN 61010-2-201 Safety*)

**Meets EMC and Safety requirements. See the Declaration of Conformity for details.*
***To obtain the most current agency approval information, see the Agency Approval Checklist section on the specific component part number web page.*

We recommend using prewired ZIPLink cables and connection modules. See Wiring Solutions.
If you wish to hand-wire your module, a removable terminal block is sold separately.
Order part number P2-RTB or P2-RTB-1.

most recent Productivity Suite software and firmware ver-
be required to support new modules and new features.

DC Output Modules

P2-16TD-TTL (cont'd)

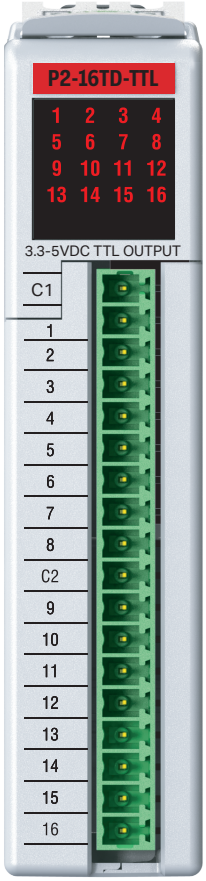

Removable Terminal Block Specifications		
Part Number	***P2-RTB***	***P2-RTB-1***
Number of positions	18 screw terminals	18 push release terminals
Wire Range	30–16 AWG (0.051–1.31 mm²) Solid/stranded conductor 3/64 in (1.2 mm) insulation max. 1/4 in (6–7 mm) strip length	28–16 AWG (0.081–1.31 mm²) Solid/stranded conductor 3/64 in (1.2 mm) insulation max. 19/64 in (7–8 mm) strip length
Conductors	USE COPPER CONDUCTORS, 75ºC or equivalent.	
Screw Driver Width	0.1 in. (2.5 mm) maximum	N/A
Screw Size	M2	N/A
Screw Torque	2.5 lb·in (0.28 N·m)	N/A

** Recommended screw driver: P/N TW-SD-MSL-1.*

Wiring Diagrams

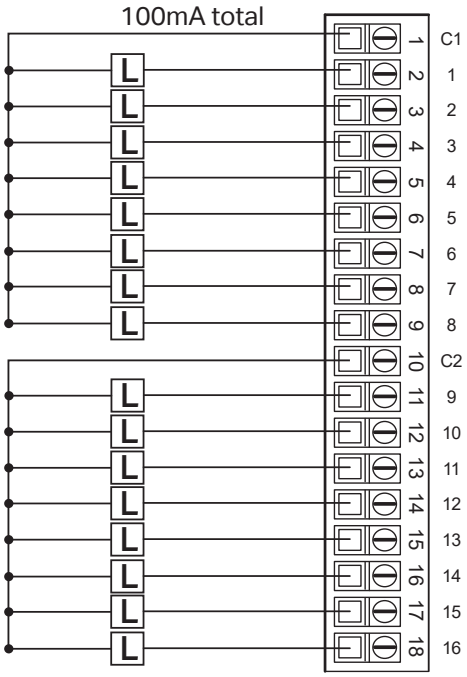

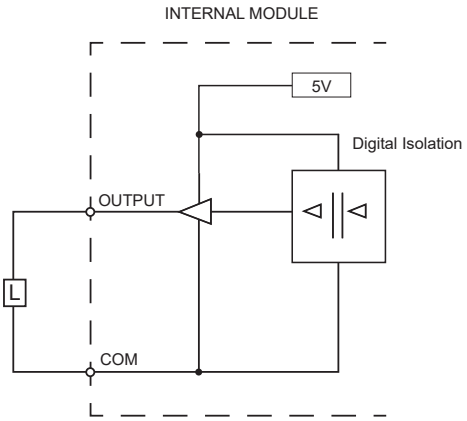

DC Output Modules

P2-32TD1P $148.00

Sinking Output
The P2-32TD1P DC Output Module provides thirty-two 12–24 VDC sinking outputs with short circuit and overload protection.

NOTE: The most recent Productivity Suite software and firmware versions may be required to support new modules and new features.

See Wiring Solutions for part numbers of ZIPLink cables and connection modules required with this I/O module.

This module can be used with ZIPLINK CONNECTION SYSTEMS

Output Specifications	
Outputs per Module	32 sinking
Voltage Rating	12–24 VDC
Operating Voltage Range	10.2–28.8 VDC
Maximum Output Current	0.2 A/Pt, 1.6 A Common @ 60C, 0.5 A/Pt, 2A Common @ 40C
Maximum Inrush Current	Self-limited
On Voltage Drop	0.5 VDC @ 0.1 A
OFF to ON Response	≤0.5 ms
ON to OFF Response	≤0.5 ms
Overcurrent Trip	0.6 A min., 1.2 A max., >50ms duration
Minimum Load Current to Avoid Open Load Fault Detection	113µA
Maximum Leakage Current	135µA @ 10.2–26.4 VDC
Over Temperature Shutdown	Independent to each output
Load Resistance to Avoid Open Load Fault Detection	<58kΩ
Status Indicators	Logic Side (16 points x 2)
External 24V Error Indicator	Logic Side (1 point)
Fault Condition Indicator	Logic Side (16 points x 2)
Commons	4 (non-isolated)
Fuses	None
External DC Power Required	24VDC (-15% / +20%) @ 80mA

General Specifications	
Operating Temperature	0° to 60°C (32° to 140°F)
Storage Temperature	-20° to 70°C (-4° to 158°F)
Humidity	5 to 95% (non-condensing)
Environmental Air	No corrosive gases permitted
Vibration	IEC60068-2-6 (Test Fc)
Shock	IEC60068-2-27 (Test Ea)
Field to Logic Side Isolation	1800VAC applied for 1 second
Insulation Resistance	>10MΩ @ 500VDC
Heat Dissipation	4.0 W
Enclosure Type	Open equipment
Module Keying to Backplane	Electronic
Module Location	Any I/O slot in any local or remote base in a Productivity2000 system.
Field Wiring	Use ZIPLink wiring system ONLY. See Wiring Solutions.
Weight	105g (3.7 oz)
Agency Approvals**	UL61010-2-201 file E139594, Canada & USA CE (EN61131-2*, SAFETY EN61010-2-201)

**Meets EMC and Safety requirements. See the Declaration of Conformity for details.*
***To obtain the most current agency approval information, see the Agency Approval Checklist section on the specific component part number web page.*

Connector Specifications	
Connector Type	IDC style header with latch, Omron XG4A-4034
Number of Pins	40 point
Pitch	0.1 in (2.54 mm)

DC Output Modules

P2-32TD1P (cont'd)

LED Status		
Fault Condition	***Fault Status Indication***	***Operation to Reset Fault***
Missing External 24VDC	V1 LED is ON	Apply external 24 VDC
Open Load (Note 1)	"F" LED is ON (Note 2)	Connect the load
Over Temperature or Over Load Current		Turn the output OFF or cycle power
LED Page Shifting		
The "A" LED is ON when the LED states correspond to outputs/ faults 1–16. The "B" LED is ON for outputs / faults 17–32.		

Note 1: Open Load Fault is always enabled, but is only valid when output is OFF. If Open Load Fault happens while output is ON, fault will not appear until you turn OFF output.

Note 2: The SEL button cycles between the output status and fault status. If the "F" LED is OFF, the numbered LEDs are showing output status. If the "F" LED is ON, the numbered LEDs are showing fault status of each output. The "V1" LED is independent of fault or output display.

Wiring Diagrams

Single Power Source

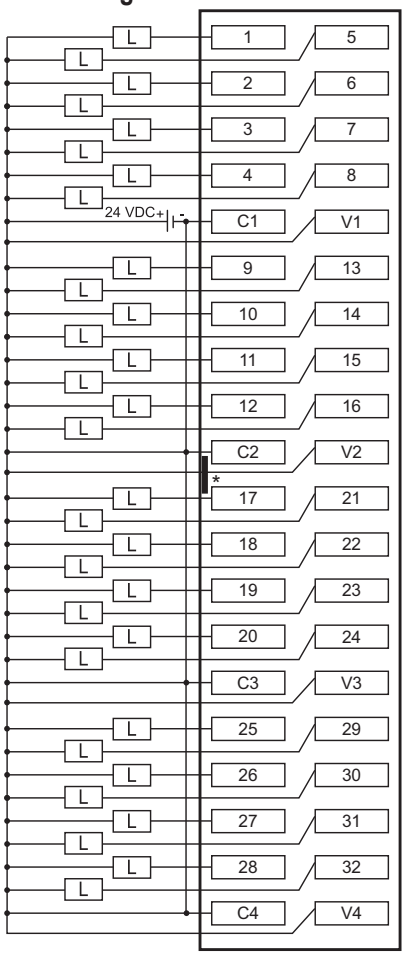

Dual Power Source

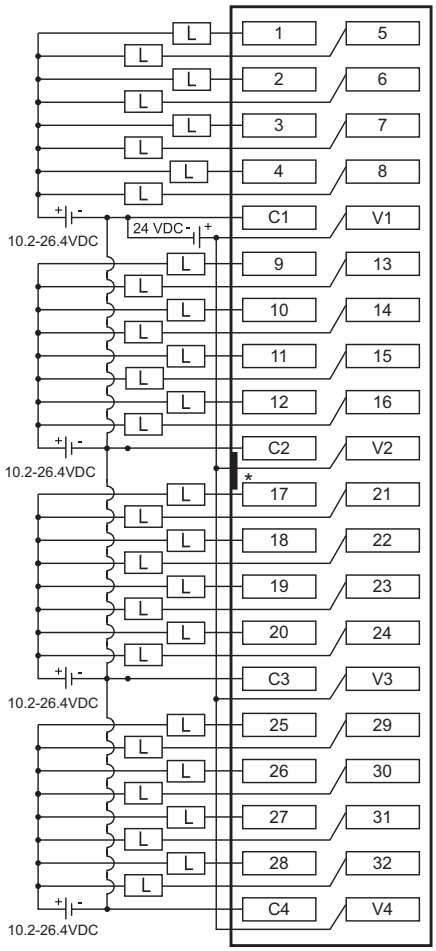

** Denotes key location of all associated ZIPLink cables.*

Sink

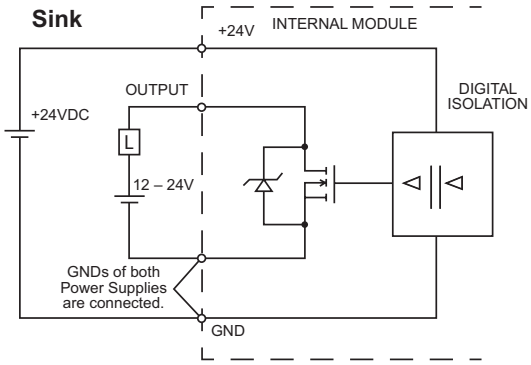

NOTE: If two separate power supplies are used to supply module control logic and output, grounds from both power supplies must be connected.

DC Output Modules

P2-32TD2P $148.00

Sourcing Output
The P2-32TD2P DC Output Module provides thirty-two 24VDC sourcing outputs with short circuit and overload protection.

Output Specifications

Outputs per Module	32 sourcing
Voltage Rating	24VDC
Operating Voltage Range	20.4–28.8 VDC
Maximum Output Current	0.2 A/Pt, 1.6 A Common @ 60C, 0.5 A/Pt, 2A Common @ 40C
Maximum Inrush Current	Self-limited
On Voltage Drop	0.5 VDC @ 0.1 A
OFF to ON Response	≤0.5 ms
ON to OFF Response	≤0.5 ms
Overcurrent Trip	0.6 A min., 1.2 A max., >50ms duration
Minimum Load Current to Avoid Open Load Fault Detection	113µA
Maximum Leakage Current	160µA @ 21.6–26.4 VDC
Over-temperature Shutdown	Independent to each output
Load Resistance to Avoid Open Load Fault Detection	<58kΩ
Status Indicators	Logic Side (16 points x 2)
External 24V Error Indicator	Logic Side (1 point)
Fault Condition Indicator	Logic Side (16 points x 2)
Commons	4 (non-isolated)
Fuses	None
External DC Power Required	24VDC (-15% / +20%) @ 80mA

General Specifications

Operating Temperature	0° to 60°C (32° to 140°F),
Storage Temperature	-20° to 70°C (-4° to 158°F)
Humidity	5 to 95% (non-condensing)
Environmental Air	No corrosive gases permitted
Vibration	IEC60068-2-6 (Test Fc)
Shock	IEC60068-2-27 (Test Ea)
Field to Logic Side Isolation	1800VAC applied for 1 second
Insulation Resistance	>10MΩ @ 500VDC
Heat Dissipation	4.0 W
Enclosure Type	Open equipment
Module Keying to Backplane	Electronic
Module Location	Any I/O slot in any local or remote base in a Productivity2000 system.
Field Wiring	Use ZIPLink wiring system ONLY. See Wiring Solutions.
Weight	105g (3.7 oz)
Agency Approvals**	UL61010-2-201 file E139594, Canada & USA CE (EN61131-2*, SAFETY EN61010-2-201)

**Meets EMC and Safety requirements. See the Declaration of Conformity for details.*
***To obtain the most current agency approval information, see the Agency Approval Checklist section on the specific component part number web page.*

NOTE: The most recent Productivity Suite software and firmware versions may be required to support new modules and new features.

Connector Specifications

Connector Type	IDC style header with latch, Omron XG4A-4034
Number of Pins	40 point
Pitch	0.1 in (2.54 mm)

See Wiring Solutions for part numbers of ZIPLink cables and connection modules required with this I/O module.

DC Output Modules

P2-32TD2P (cont'd)

LED Status		
Fault Condition	***Fault Status Indication***	***Operation to Reset Fault***
Missing External 24VDC	V1 LED is ON	Apply external 24VDC
Open Load (Note 1)	"F" LED is ON (Note 2)	Connect the load
Over Temperature or Over Load Current		Turn the output OFF or cycle power
LED Page Shifting		
The "A" LED is ON when the LED states correspond to outputs/ faults 1–16. The "B" LED is ON for outputs / faults 17–32.		

Note 1: Open Load Fault is always enabled, but is only valid when output is OFF. If Open Load Fault happens while output is ON, fault will not appear until output turns OFF.
Note 2: The SEL button cycles between the output status and fault status. If the "F" LED is OFF the numbered LEDs are showing output status. If the "F" LED is ON the numbered LEDs are showing fault status of each output. The "V1" LED is independent of fault or output display.

Wiring Diagrams

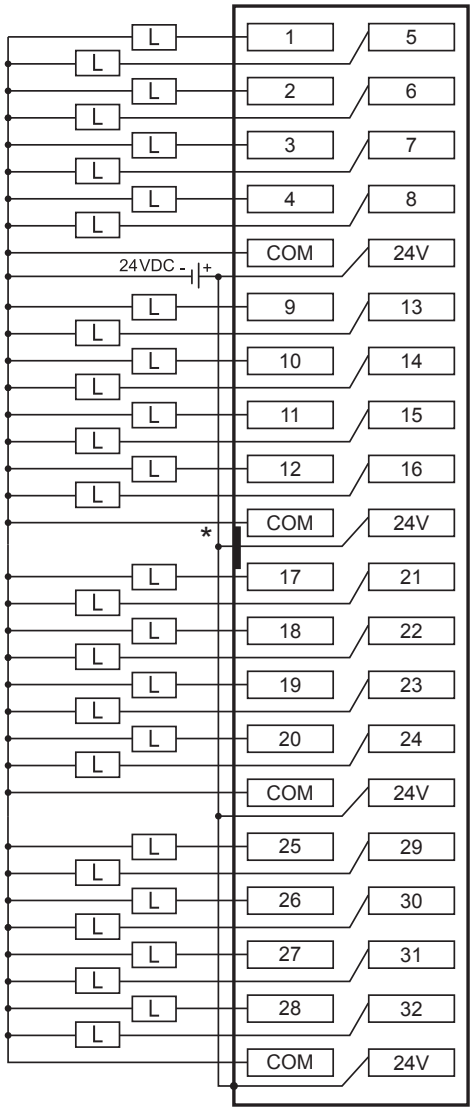

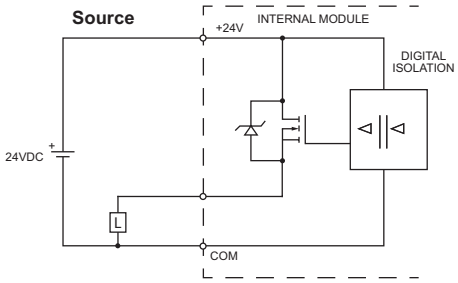

** Denotes key location of all associated ZIPLink cables.*

AC Output Modules

P2-08TAS $154.00

AC Isolated Output
The P2-08TAS AC Output Module provides eight 100–120 VAC isolated outputs.

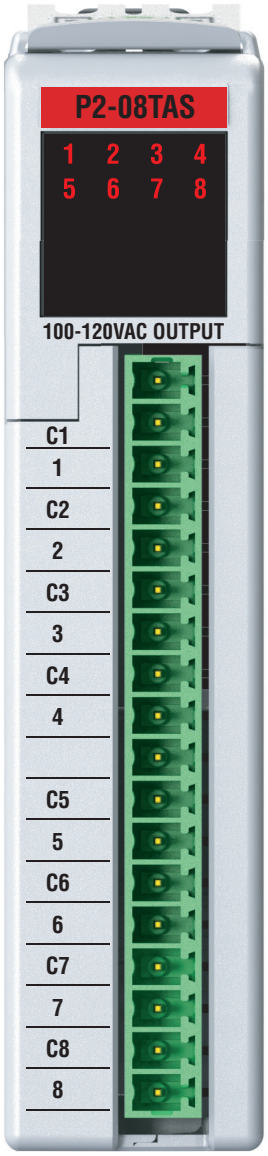

Terminal block sold separately.

Output Specifications	
Outputs per Module	8
Rated Voltage	100–120 VAC
Operating Voltage Range	85–132 VAC
Maximum Output Current	1A / point @ 40°C 0.7 A / point @ 60°C
Minimum Load Current	10mA
Maximum Leakage Current	4mA @ 144VDC
On Voltage Drop	1.5 VAC @ > 50mA 4.0 VAC @ < 50mA
Maximum Inrush Current	3A for 10ms
OFF to ON Response	1ms + 1/2 cycle
ON to OFF Response	1ms + 1/2 cycle
AC Frequency	47–63 Hz
Status Indicators	Logic Side (8 points)
Commons	8 Isolated (1 point / common)
Recommended External Fuse	1.6 A Max. (AutomationDirect P/N S5001-6-R)

General Specifications	
Operating Temperature	0° to 60°C (32° to 140°F),
Storage Temperature	-20° to 70°C (-4° to 158°F)
Humidity	5 to 95% (non-condensing)
Environmental Air	No corrosive gases permitted
Vibration	IEC60068-2-6 (Test Fc)
Shock	IEC60068-2-27 (Test Ea)
Field to Logic Side Isolation	1800VAC applied for 1 second
Insulation Resistance	>10MΩ @ 500VDC
Heat Dissipation	1500mW
Enclosure Type	Open equipment
Module Keying to Backplane	Electronic
Module Location	Any I/O slot in a Productivity2000 system.
Field Wiring	Use ZIPLink wiring system or removable terminal block (not included). See Wiring Solutions.
Connector Type (Sold separately)	18 position removable terminal block
Weight	85g (2.9 oz)
Agency Approvals**	UL 61010-2-201 file E139594, Canada & USA CE (EN61131-2*, SAFETY EN61010-2-201)

**Meets EMC and Safety requirements. See the Declaration of Conformity for details.*
***To obtain the most current agency approval information, see the Agency Approval Checklist section on the specific component part number web page.*

NOTE: The most recent Productivity Suite software and firmware versions may be required to support new modules and new features.

We recommend using prewired ZIPLink cables and connection modules. See Wiring Solutions.
If you wish to hand-wire your module, a removable terminal block is sold separately. Order part number P2-RTB or P2-RTB-1.

AC Output Modules

P2-08TAS (cont'd)

Removable Terminal Block Specifications		
Part Number	***P2-RTB***	***P2-RTB-1***
Number of positions	18 screw terminals	18 push release terminals
Wire Range	30–16 AWG (0.051–1.31 mm²) Solid/stranded conductor 3/64 in (1.2 mm) insulation max. 1/4 in (6–7 mm) strip length	28–16 AWG (0.081–1.31 mm²) Solid/stranded conductor 3/64 in (1.2 mm) insulation max. 19/64 in (7–8 mm) strip length
Conductors	USE COPPER CONDUCTORS, 75ºC or equivalent.	
Screw Driver Width	0.1 in. (2.5 mm) maximum	NA
Screw Size	M2	N/A
Screw Torque	2.5 lb·in (0.28 N·m)	N/A

** Recommended screw driver: P/N TW-SD-MSL-1.*

Wiring Diagrams

100 - 120 VAC
50 - 60 Hz

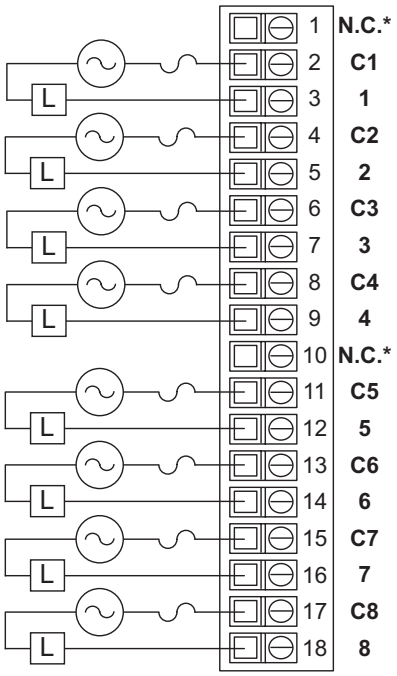

*N.C. = No Connection

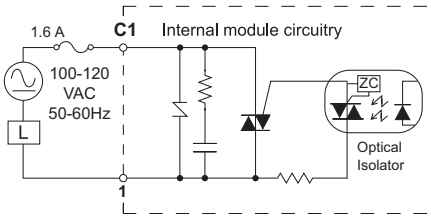

AC Output Modules

P2-16TA $190.00

AC Output
The P2-16TA AC Output Module provides sixteen 100-240 VAC outputs.

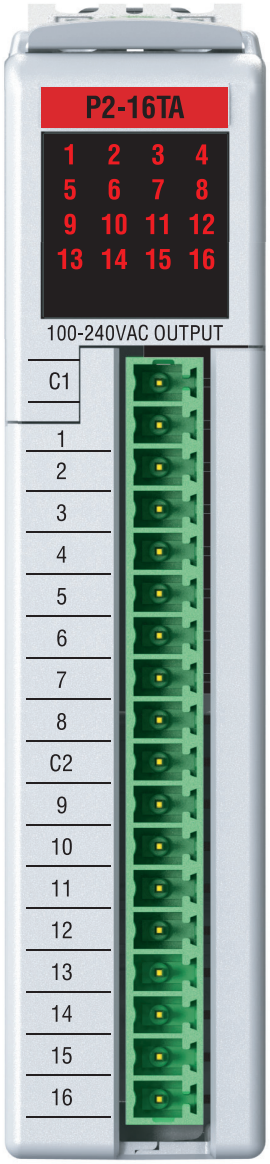

Terminal block sold separately.

Output Specifications		
Outputs per Module		16
Voltage Rating		100–240 VAC
Operating Voltage Range (Tolerance)	(CE)	100–240 VAC (-15% / +10%)
	(UL)	100–240 VAC (-20% / +20%)
AC Frequency		47–63 Hz
Maximum Output Current @ Temp		0.5 A / point , 4A / common @ 55°C 0.3 A / point , 2.4 A / common @ 60°C
Minimum Load		10mA
Maximum Leakage Current		4mA @ 264VAC
On Voltage Drop		1.5 VAC @ > 50mA 4.0 VAC @ < 50mA
Maximum Inrush Current		10A for 10ms
OFF to ON Response		1ms + 1/2 cycle
ON to OFF Response		1ms + 1/2 cycle
Status Indicators		Logic Side (16 points)
Commons		2 Isolated Commons for 120V 2 Non-Isolated Commons for 240V (external jumper required)
Recommended External Fuse		6.3 A Max. (AutomationDirect P/N S5006-3-R)

General Specifications	
Operating Temperature	0° to 60°C (32° to 140°F)
Storage Temperature	-20° to 70°C (-4° to 158°F)
Humidity	5 to 95% (non-condensing)
Environmental Air	No corrosive gases permitted
Vibration	IEC60068-2-6 (Test Fc)
Shock	IEC60068-2-27 (Test Ea)
Field to Logic Side Isolation	1800VAC applied for 1 second
Insulation Resistance	>10MΩ @ 500VDC
Heat Dissipation	1.9 W
Enclosure Type	Open equipment
Module Keying to Backplane	Electronic
Module Location	Any I/O slot in any local base in a Productivity2000 system.
Field Wiring	Use ZIPLink wiring system or removable terminal block (not included). See Wiring Solutions.
Connector Type (Sold separately)	18 position removable terminal block
Weight	90g (3.2 oz)
Agency Approvals**	UL508 file E139594, Canada & USA CE (EN61131-2*)

**Meets EMC and Safety requirements. See the Declaration of Conformity for details.*
***To obtain the most current agency approval information, see the Agency Approval Checklist section on the specific component part number web page.*

We recommend using prewired ZIPLink cables and connection modules. See Wiring Solutions.
If you wish to hand-wire your module, a removable terminal block is sold separately. Order part number P2-RTB or P2-RTB-1.

AC Output Modules

P2-16TA (cont'd)

Removable Terminal Block Specifications		
Part Number	***P2-RTB***	***P2-RTB-1***
Number of positions	18 screw terminals	18 push release terminals
Wire Range	30–16 AWG (0.051–1.31 mm²) Solid/stranded conductor 3/64 in (1.2 mm) insulation max. 1/4 in (6–7 mm) strip length	28–16 AWG (0.081–1.31 mm²) Solid/stranded conductor 3/64 in (1.2 mm) insulation max. 19/64 in (7–8 mm) strip length
Conductors	USE COPPER CONDUCTORS, 75ºC or equivalent.	
Screw Driver Width	0.1 in. (2.5 mm) maximum	NA
Screw Size	M2	N/A
Screw Torque	2.5 lb·in (0.28 N·m)	N/A

** Recommended screw driver: P/N TW-SD-MSL-1.*

Wiring Diagrams

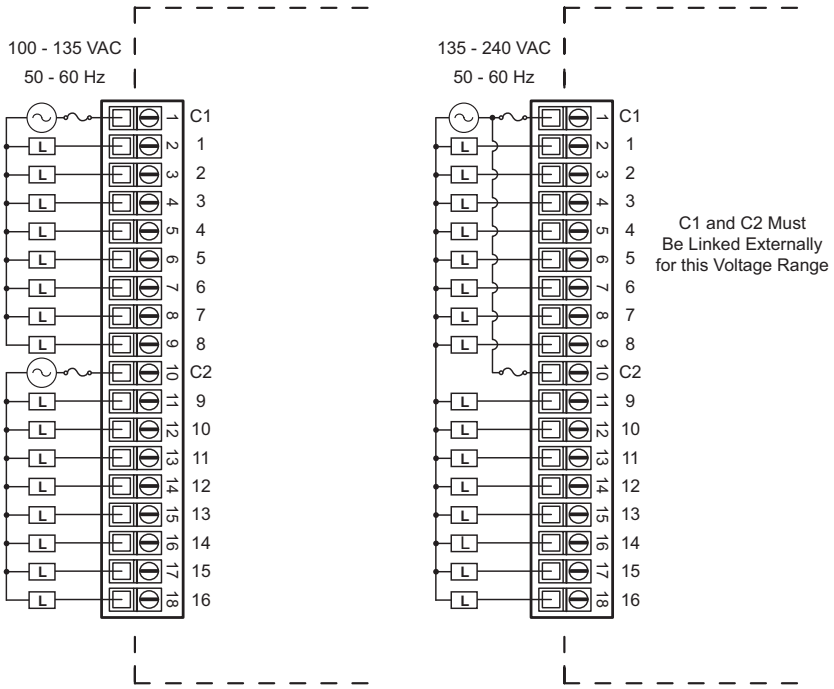

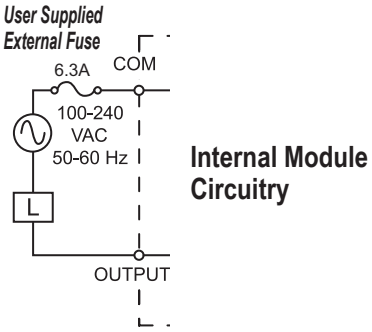

Relay Output Modules

P2-06TRS $111.00

Isolated Relay Output

The P2-06TRS high-current isolated relay output module provides six, 7A surge-protected relay outputs for extended life. The module offers both normally open and normally closed relay contacts. For use with the Productivity2000 system.

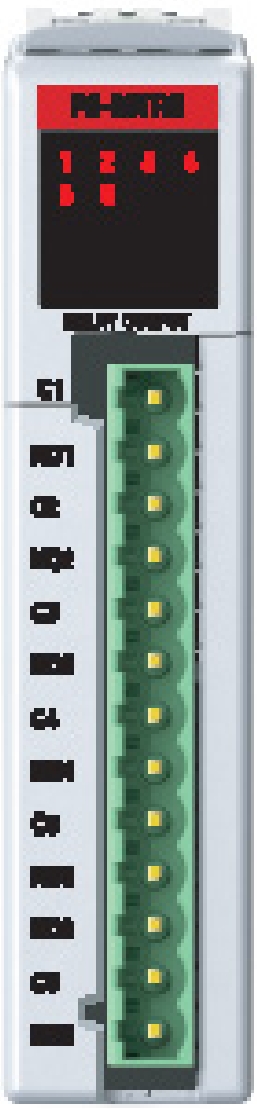

Terminal block sold separately.

ZipLink connectors are not compatible with this module. P2-RTB13 or P2-RTB13-1 removable terminal blocks must be ordered separately.

NOTE: The most recent Productivity Suite software and firmware versions may be required to support new modules and new features.

Output Specifications	
Outputs per Module	6
Rated Voltage	100-240 VAC / 30VDC
Operating Voltage Range	5–30 VDC 5-264 VAC
Output type	5 Relays, FORM A (SPST) 1 Relays, FORM C (SPDT)
AC Frequency	47–63 Hz
Maximum Output Current @ Temp	7A / point @ 40°C, 6A/point at 60°C for both AC and DC
Minimum Load Current	5mA @ 5VDC
Maximum Inrush Current	10A for 10ms
OFF to ON Response	10ms
ON to OFF Response	10ms
Status Indicators	Logic Side (6 points)
Commons	6 Isolated (1 point / common)
Protection Circuit	12A Max Not built-in to module - install protection elements such as external fuse.

General Specifications	
Operating Temperature	0° to 60°C (32° to 140°F)
Storage Temperature	-20° to 70°C (-4° to 158°F)
Humidity	5 to 95% (non-condensing)
Altitude	2,000 meters, max.
Pollution Degree	2
Environmental Air	No corrosive gases permitted
Vibration	IEC60068-2-6 (Test Fc)
Shock	IEC60068-2-27 (Test Ea)
Overvoltage Category	II
Field to Logic Side Isolation	3000VAC applied for 5 second 1100VAC applied for 1 minute
Insulation Resistance	>10MΩ @ 500VDC
Heat Dissipation	3W
Enclosure Type	Open equipment
Module Keying to Backplane	Electronic
Module Location	Any I/O slot in a Productivity2000 system.
Field Wiring	Use removable terminal block (not included). See Wiring Solutions.
Connector Type (Sold separately)	13 position removable terminal block
Weight	148g (5.2 oz)
Agency Approvals	UL 61010-1 and UL 61010-2-201 File E139594, Canada and USA[1,2] CE (EN 61131-2 EMC, EN 61010-1 and EN 61010-2-201 Safety)[3]

1. Meets EMC and Safety requirements. See the Declaration of Conformity for details.
2. Per UL61010-2-201 mixed voltage use is restricted:
Mixed use of 24VDC and 120VAC is allowed.
Mixed use of 120VAC and 240VAC is allowed.
Mixed use of 24VDC and 240VAC is not permitted.
3. To obtain the most current agency approval information, see the Agency Approval Checklist section on the specific component part number web page.

Relay Output Modules

P2-06TRS (cont'd)

Removable Terminal Block Specifications		
Part Number	***P2-RTB13***	***P2-RTB13-1***
Number of positions	13 Screw terminals, 5.08 mm terminal block plug	13 Push release terminals. 5.08 mm terminal block plug
Wire Range	24–12 AWG (0.25–4mm²) Solid/stranded conductor 3/64 in (1.2 mm) insulation max. 3/8 in (9–10 mm) strip length	
Conductors	USE COPPER CONDUCTORS, 75ºC or equivalent.	
Screw Driver Width	0.13 in. (3.5 mm) maximum*	N/A
Screw Size	M2.5	N/A
Screw Torque	4.4 lb·in (0.5 N·m)	N/A

** Recommended screw driver: P/N TW-SD-MSL-1.*

Typical Relay Life	
Voltage & Type of Load	Operations at 4A Load Current
30VDC Resistive	100,000
30VDC Solenoid	
120VAC Resistive	
120VAC Solenoid	

Wiring Diagrams

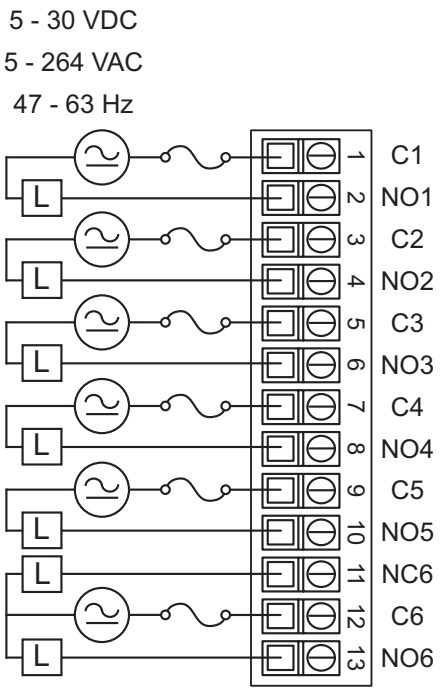

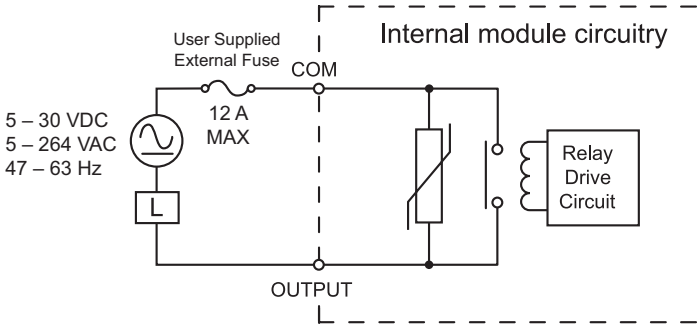

Relay Output Modules

P2-08TRS $73.00

Isolated Relay Output
The P2-08TRS Isolated Relay Output Module provides eight 4A relay outputs. The module offers both normally open and normally closed relay contacts.

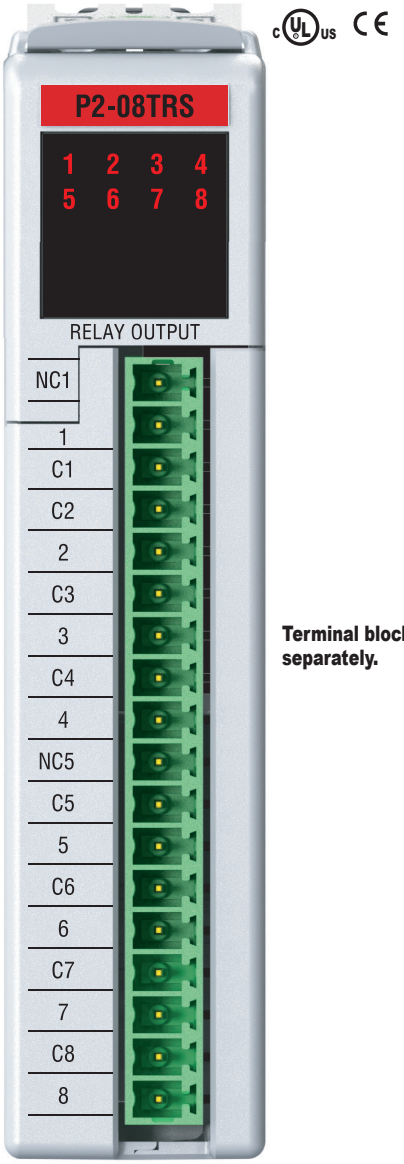

Terminal block sold separately.

Output Specifications		
Outputs per Module		8
Operating Voltage Range (Tolerance)	(CE)	6.25–24 VDC (-15% / + 20%) 6–120 VAC (-15% / + 10%)
	(UL)	120VAC / 30VDC, 4A / point
Output type		6 Relays, FORM A (SPST) 2 Relays, FORM C (SPDT)
AC Frequency		47–63 Hz
Maximum Output Current @ Temp		4A / point @ 60°C for both AC and DC 2A / point if used with ZIPLink Cable
Minimum Load Current		5mA @ 5VDC
Maximum Inrush Current		4A for 10ms
OFF to ON Response		m 10ms
ON to OFF Response		m 10ms
Status Indicators		Logic Side (8 points)
Commons		8 Isolated (1 point / common)
External Fuses (user supplied)		6.3 A Max

General Specifications	
Operating Temperature	0° to 60°C (32° to 140°F)
Storage Temperature	-20° to 70°C (-4° to 158°F)
Humidity	5 to 95% (non-condensing)
Environmental Air	No corrosive gases permitted
Vibration	IEC60068-2-6 (Test Fc)
Shock	IEC60068-2-27 (Test Ea)
Field to Logic Side Isolation	1800VAC applied for 1 second
Insulation Resistance	>10MΩ @ 500VDC
Heat Dissipation	3W
Enclosure Type	Open equipment
Module Keying to Backplane	Electronic
Module Location	Any I/O slot in a Productivity2000 system.
Field Wiring	Use ZIPLink wiring system or removable terminal block (not included). See Wiring Solutions.
Connector Type (Sold separately)	18 position removable terminal block
Weight	157g (5.54 oz)
Agency Approvals**	UL508 file E139594, Canada & USA CE (EN61131-2*)

**Meets EMC and Safety requirements. See the Declaration of Conformity for details.*
***To obtain the most current agency approval information, see the Agency Approval Checklist section on the specific component part number web page.*

We recommend using prewired ZIPLink cables and connection modules. See Wiring Solutions.
If you wish to hand-wire your module, a removable terminal block is sold separately. Order part number P2-RTB or P2-RTB-1.

Typical Relay Life	
Voltage & Type of Load	Operations at 4A Load Current
30VDC Resistive	100,000
30VDC Solenoid	
120VAC Resistive	
120VAC Solenoid	

Relay Output Modules

P2-08TRS (cont'd)

Removable Terminal Block Specifications		
Part Number	***P2-RTB***	***P2-RTB-1***
Number of positions	18 screw terminals	18 push release terminals
Wire Range	30–16 AWG (0.051–1.31 mm²) Solid/stranded conductor 3/64 in (1.2 mm) insulation max. 1/4 in (6–7 mm) strip length	28–16 AWG (0.081–1.31 mm²) Solid/stranded conductor 3/64 in (1.2 mm) insulation max. 19/64 in (7–8 mm) strip length
Conductors	USE COPPER CONDUCTORS, 75ºC or equivalent.	
Screw Driver Width	0.1 in. (2.5 mm) maximum	NA
Screw Size	M2	N/A
Screw Torque	2.5 lb·in (0.28 N·m)	N/A

** Recommended screw driver: P/N TW-SD-MSL-1.*

Wiring Diagrams

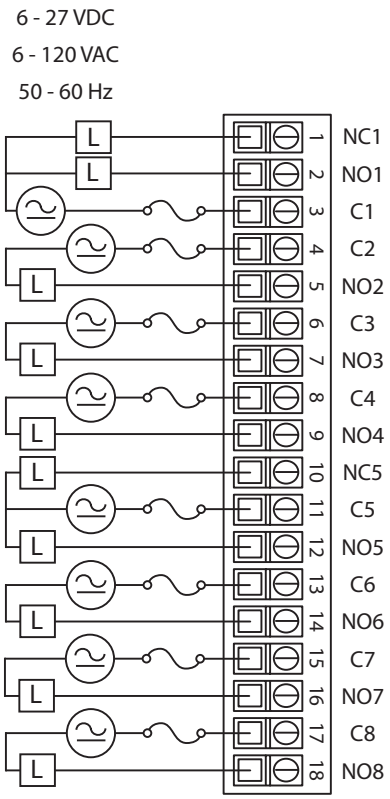

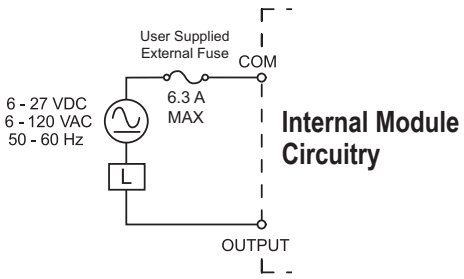

Relay Output Modules

P2-16TR $137.00

Relay Output
The P2-16TR Relay Output Module provides sixteen 1.0 A surge protected relay outputs with two isolated commons.

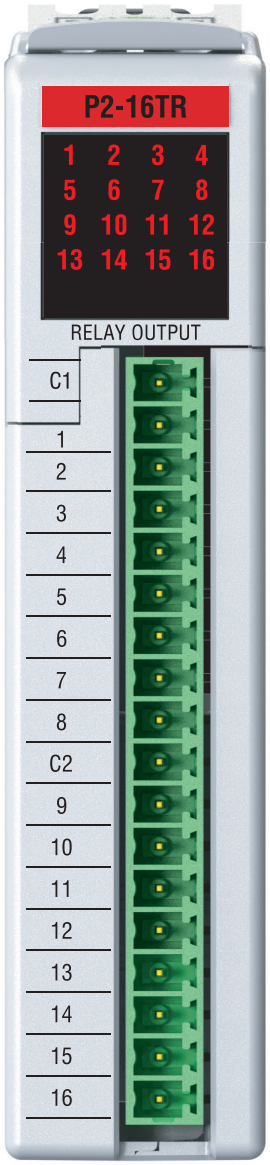

Terminal block sold separately.

Output Specifications		
Outputs per Module		16
Operating Voltage Range	(CE)	6.25–24 VDC (-15%/+20%) 6–240 VAC (-15%/+10%)
	(UL)	6–27 VDC (-15%/+10%) 6–240 VAC (-10%/+10%)
Output Type		Relay, form A (SPST)
AC Frequency		47–63 Hz
Maximum Output Current @ Temp		1A / point, 8A / common @ 60°C for both AC and DC
Minimum Load Current		5mA @ 5VDC
Maximum Inrush Current		4A for 10ms
OFF to ON Response		m 10ms
ON to OFF Response		m 10ms
Status Indicators		Logic Side (16 points)
Commons		2 Isolated (8 point / common)
External Fuses (user supplied)		8A Max

General Specifications	
Operating Temperature	0° to 60°C (32° to 140°F)
Storage Temperature	-20° to 70°C (-4° to 158°F)
Humidity	5 to 95% (non-condensing)
Environmental Air	No corrosive gases permitted
Vibration	IEC60068-2-6 (Test Fc)
Shock	IEC60068-2-27 (Test Ea)
Field to Logic Side Isolation	1800VAC applied for 1 second
Insulation Resistance	>10MΩ @ 500VDC
Heat Dissipation	2.73 W
Enclosure Type	Open equipment
Module Keying to Backplane	Electronic
Module Location	Any I/O slot in a Productivity2000 system.
Field Wiring	Use ZIPLink wiring system or removable terminal block (not included). See Wiring Solutions.
Connector Type (Sold separately)	18 position removable terminal block
Weight	188g (6.64 oz)
Agency Approvals*	UL508 file E139594, Canada & USA CE (EN61131-2*)

**Meets EMC and Safety requirements. See the Declaration of Conformity for details.*
***To obtain the most current agency approval information, see the Agency Approval Checklist section on the specific component part number web page.*

We recommend using prewired ZIPLink cables and connection modules. See Wiring Solutions.
If you wish to hand-wire your module, a removable terminal block is sold separately. Order part number P2-RTB or P2-RTB-1.

Typical Relay Life	
Voltage & Type of Load	Operations at 1A load current
30VDC Resistive	100,000
30VDC Solenoid	
120VAC Resistive	
120VAC Solenoid	
240VAC Resistive	
240VAC Solenoid	

Relay Output Modules

P2-16TR (cont'd)

Removable Terminal Block Specifications		
Part Number	***P2-RTB***	***P2-RTB-1***
Number of positions	18 screw terminals	18 push release terminals
Wire Range	30–16 AWG (0.051–1.31 mm²) Solid/stranded conductor 3/64 in (1.2 mm) insulation max. 1/4 in (6–7 mm) strip length	28–16 AWG (0.081–1.31 mm²) Solid/stranded conductor 3/64 in (1.2 mm) insulation max. 19/64 in (7–8 mm) strip length
Conductors	USE COPPER CONDUCTORS, 75ºC or equivalent.	
Screw Driver Width	0.1 in. (2.5 mm) maximum	NA
Screw Size	M2	N/A
Screw Torque	2.5 lb·in (0.28 N·m)	N/A

** Recommended screw driver: P/N TW-SD-MSL-1.*

Wiring Diagrams

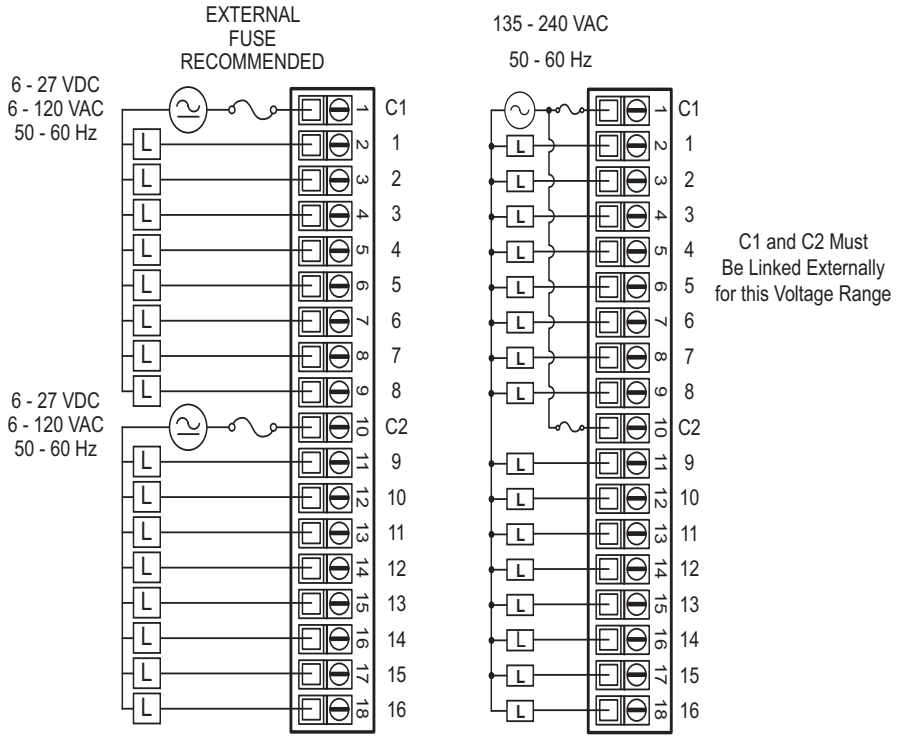

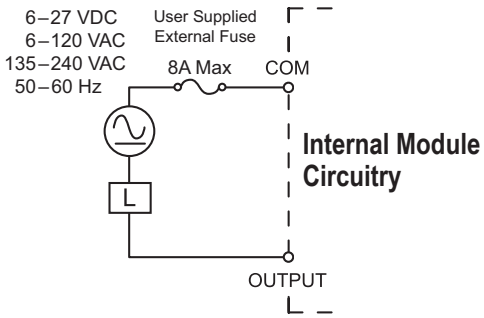

Analog Input Modules

P2-04AD $288.00

Voltage/Current Analog Input
The P2-04AD Voltage/Current Analog Input Module provides four channels for receiving ±10VDC, ±5VDC, 0–5 VDC and 0 to 20 mA signals.

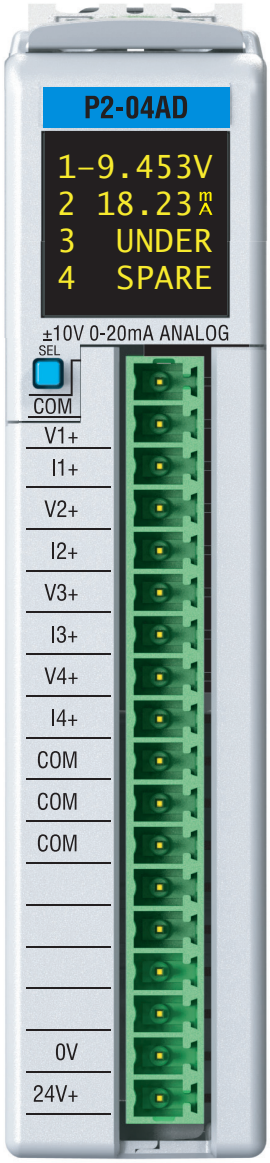

Terminal block sold separately.

We recommend using prewired ZIPLink cables and connection modules. See Wiring Solutions.
If you wish to hand-wire your module, a removable terminal block is sold separately. Order part number P2-RTB or P2-RTB-1.

Input Specifications		
Input Channels	4	
Module Signal Input Ranges	±10VDC, ±5VDC, 0–5 VDC, 0–10 VDC, 0–20mA	
Signal Resolution	16-bit	
Resolution Value of LSB (least significant bit)	1 LSB = 1 count ±10V = 305µV ±5V = 152µV	0–5V = 76µV 0–10V = 152µV 0–20mA = 0.305 µA
Data Range	0-65535 counts unipolar -32768 to +32767 counts bipolar	
Maximum Continuous Overload	±31mA, current input ±100V, voltage input	
Input Impedance	1MΩ ±10% voltage input 250Ω ±0.1% 1/4 W current input	
Hardware Filter Characteristics	Low Pass 1st order, -3dB @ 48Hz	
Sample Duration Time	2ms per channel (does not include ladder scan time)	
All Channel Update Rate	8ms	
Open Circuit Detection Time	Zero reading within 1s (current input only)	
Conversion Method	Successive approximation	
Accuracy vs. Temperature	±10PPM / ºC maximum	
Maximum Inaccuracy	0.1% of range voltage, 0.2% of range current (including temperature drift)	
Linearity Error (end to end)	±0.01% of range max., ±10V & ±5V ±0.015% of range max., 0–10V, 0–5V & 0–20mA Monotonic with no missing codes	
Input Stability and Repeatability	±0.035% of range (after 10 min. warmup)	
Full Scale Calibration Error	±0.2% of range maximum	
Offset Calibration Error	±0.065% of range maximum	
Max Crosstalk	-96dB, 1 LSB	
Recommended Fuse (external)	Edison S500-32-R, 0.032A fuse on current inputs only	
External DC Power Required	24VDC (-20% / +25%) 35mA	

Removable Terminal Block Specifications		
Part Number	***P2-RTB***	***P2-RTB-1***
Number of positions	18 screw terminals	18 push release terminals
Wire Range	30–16 AWG (0.051–1.31 mm²) Solid/stranded conductor 3/64 in (1.2 mm) insulation max. 1/4 in (6–7 mm) strip length	28–16 AWG (0.081–1.31 mm²) Solid/stranded conductor 3/64 in (1.2 mm) insulation max. 19/64 in (7–8 mm) strip length
Conductors	USE COPPER CONDUCTORS, 75ºC or equivalent.	
Screw Driver Width	0.1 in. (2.5 mm) maximum	NA
Screw Size	M2	N/A
Screw Torque	2.5 lb·in (0.28 N·m)	N/A

** Recommended screw driver: P/N TW-SD-MSL-1.*

Analog Input Modules

P2-04AD (cont'd)

General Specifications	
Operating Temperature	0º to 60ºC (32º to 140ºF)
Storage Temperature	-20º to 70ºC (-4º to 158ºF)
Humidity	5 to 95% (non-condensing)
Environmental Air	No corrosive gases permitted
Vibration	IEC60068-2-6 (Test Fc)
Shock	IEC60068-2-27 (Test Ea)
Field to Logic Side Isolation	1800VAC applied for 1 second
Insulation Resistance	>10MΩ @ 500VDC
Heat Dissipation	1.4 W
Enclosure Type	Open equipment
Module Keying to Backplane	Electronic
Module Location	Any I/O slot in a Productivity2000 system
Field Wiring	Use ZIPLink wiring system or removable terminal block (not included). See Wiring Solutions.
Connector Type (Sold separately)	18-position removable terminal block
Agency Approvals*	UL 61010-1 and UL 61010-2-201 File E139594, Canada & USA CE (EN 61131-2 EMC, EN 61010-1 and EN 61010-2-201 Safety)*
Weight	90g (3.2 oz)

**Meets EMC and Safety requirements. See the Declaration of Conformity for details.*
***To obtain the most current agency approval information, see the Agency Approval Checklist section on the specific component part number web page.*

Wiring Diagrams

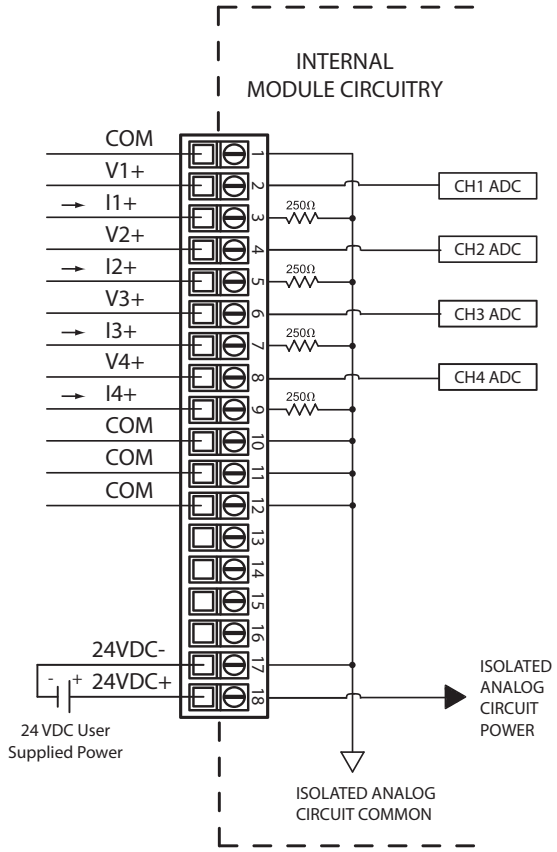

Current Sinking Input Circuits

An Edison S500-32-R 0.032A fast-acting fuse is recommended for all current loops.

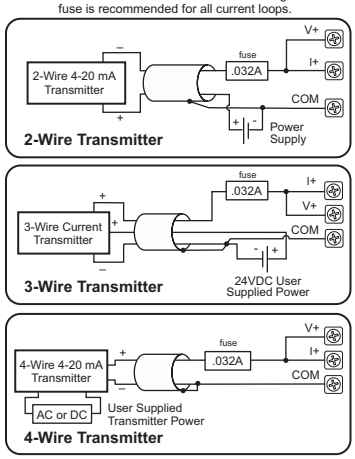

Voltage Input Circuits

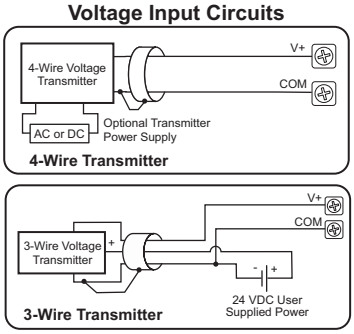

Notes:
1. Shield connected to signal source common.
2. If current is chosen, I+ MUST be jumpered to V+. For example, when using 4–20 mA source for Input 3, I3+ must be connected to V3+.

Analog Input Modules

P2-04AD-1 $217.00

Current Analog Input

The P2-04AD-1 Current Analog Input Module provides four channels for receiving 0–20 mA signals for use with the Productivity2000 system.

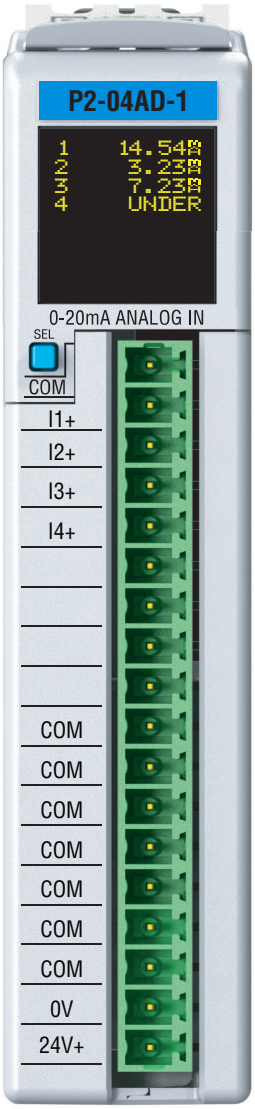

Terminal block sold separately.

NOTE: The most recent Productivity Suite software and firmware versions may be required to support new modules and new features.

We recommend using prewired ZIPLink cables and connection modules. See Wiring Solutions. If you wish to hand-wire your module, a removable terminal block is sold separately. Order part number P2-RTB or P2-RTB-1.

Input Specifications	
Inputs per Module	4 Sinking
Input Range	0–20 mA
Signal Resolution	16-bit
Resolution Value of LSB (least significant bit)	0–20 mA=0.305 µA per count (1LSB = 1 count)
Data Range	0-65535 counts unipolar
Input Type	Sinking, Single-ended (1 common)
Maximum Continuous Overload	±31mA
Input Impedance	250Ω ±0.1% 1/4 W
Filter Characteristics	Low Pass, -3dB @ 100Hz
Sample Duration Time	9ms per channel (does not include ladder scan time)
All Channel Update Rate	80ms
Open Circuit Detection Time	Zero reading within 1s
Conversion Method	Successive approximation
Accuracy vs Temperature	±25PPM / °C maximum
Maximum Inaccuracy	0.1% of range (including temperature drift)
Linearity Error (end to end)	±0.015% of range Monotonic with no missing codes
Input Stability and Repeatability	±0.015% of range (after 10 min. warm-up)
Full Scale Calibration Error	±0.015% of range maximum
Offset Calibration Error	±0.015% of range maximum
Maximum Crosstalk at DC, 50Hz and 60Hz	76dB, ±10 LSB
Recommended Fuse (external)	Edison S500-32-R, 0.032 A fuse
External Power Supply Required	24VDC (-20% / + 25%), 35mA

Removable Terminal Block Specifications		
Part Number	***P2-RTB***	***P2-RTB-1***
Number of positions	18 screw terminals	18 push release terminals
Wire Range	30–16 AWG (0.051–1.31 mm²) Solid/stranded conductor 3/64 in (1.2 mm) insulation max. 1/4 in (6–7 mm) strip length	28–16 AWG (0.081–1.31 mm²) Solid/stranded conductor 3/64 in (1.2 mm) insulation max. 19/64 in (7–8 mm) strip length
Conductors	USE COPPER CONDUCTORS, 75ºC or equivalent.	
Screw Driver Width	0.1 in. (2.5 mm) maximum	NA
Screw Size	M2	N/A
Screw Torque	2.5 lb·in (0.28 N·m)	N/A

** Recommended screw driver: P/N TW-SD-MSL-1*

Analog Input Modules

P2-04AD-1 (cont'd)

General Specifications	
Operating Temperature	0º to 60ºC (32º to 140ºF)
Storage Temperature	-20º to 70ºC (-4º to 158ºF)
Humidity	5 to 95% (non-condensing)
Altitude	2,000 meters, max.
Pollution Degree	2
Environmental Air	No corrosive gases permitted
Vibration	IEC60068-2-6 (Test Fc)
Shock	IEC60068-2-27 (Test Ea)
Field to Logic Side Isolation	1800VAC applied for 1 second
Insulation Resistance	>10MΩ @ 500VDC
Heat Dissipation	1200mW
Overvoltage Category	II
Enclosure Type	Open equipment
Module Keying to Backplane	Electronic
Module Location	Any I/O slot in a Productivity2000 system
Field Wiring	Use ZIPLink wiring system or removable terminal block (sold separately). See "Wiring Solutions".
Connector Type (sold separately)	18-position Removable Terminal Block
Agency Approvals	UL 61010-1 and UL 61010-2-201 File E139594, Canada and USA CE (EN 61131-2 EMC, EN 61010-1 and EN 61010-2-201 Safety)*
Weight	90g (3.2 oz)

** Meets EMC and Safety requirements. See CE D.O.C for details.*

Wiring Diagrams

Current Input Circuits

An Edison S500-32-R 0.032A fast-acting fuse is recommended for current loops.

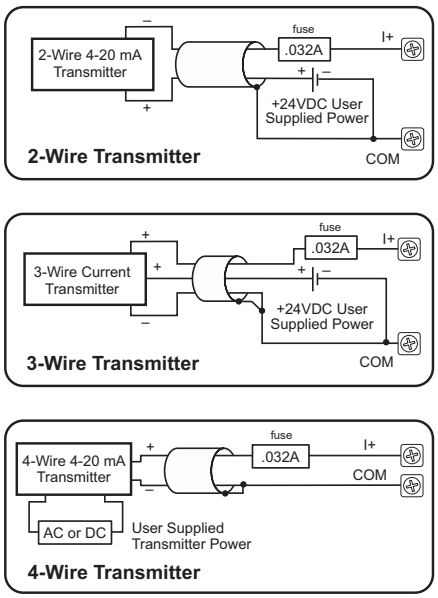

Note: Do not connect both ends of shield.

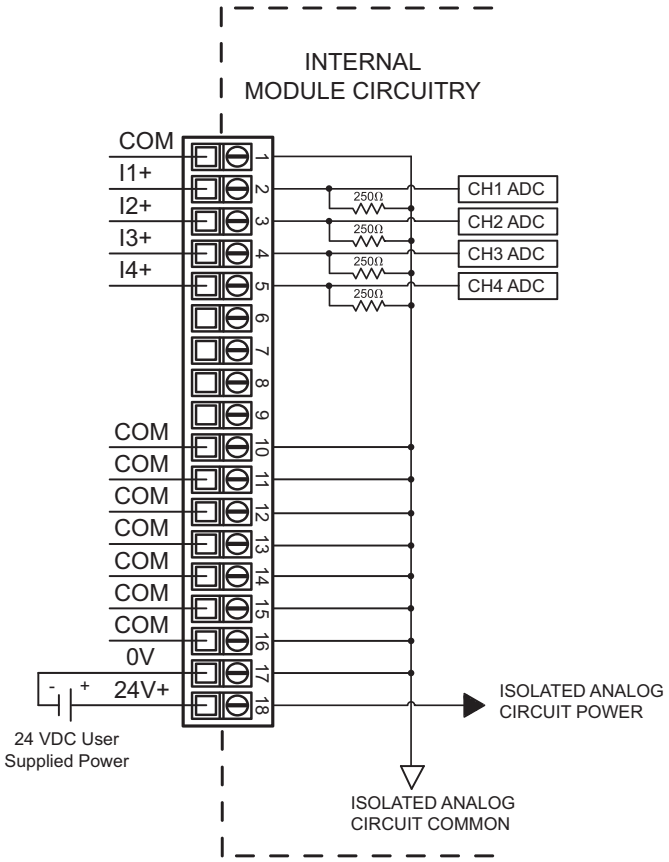

Analog Input Modules

P2-04AD-2 $224.00

Voltage Analog Input

The P2-04AD-2 Voltage Analog Input Module provides four channels for receiving 0–10 VDC signals for use with the Productivity2000 system.

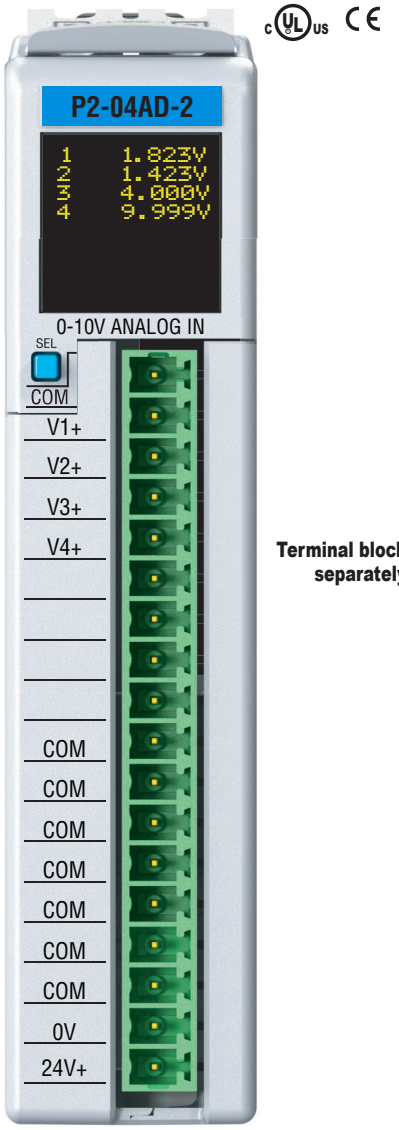

Terminal block sold separately.

Input Specifications	
Inputs per Module	4
Input Range	0–10 VDC
Signal Resolution	16-bit
Resolution Value of LSB (least significant bit)	0–10 VDC = 152µV per count, (1 LSB = 1 count)
Data Range	0-65535 counts
Input Type	Single-ended (1 common)
Maximum Continuous Overload	±100V
Input Impedance	250kΩ (typical)
Hardware Filter Characteristics	Low Pass -3dB @ 100Hz
Sample Duration Time	7ms per channel (does not include ladder scan time)
All Channel Update Rate	80ms
Open Circuit Detection Time	Zero reading within 1s
Conversion Method	Successive approximation
Accuracy vs Temperature	±25PPM / °C maximum
Maximum Inaccuracy	0.1% of range voltage (Including temperature drift)
Linearity Error (end to end)	±0.015% of range Monotonic with no missing codes
Input Stability and Repeatability	±0.015% of range (after 10 min. warm-up)
Maximum Full Scale Calibration Error	±0.15% of range maximum
Offset Calibration Error	±0.015% of range maximum
Maximum Crosstalk	-76dB, ±10 LSB
External Power Supply Required	24VDC (-20% / + 25%), 35mA

Removable Terminal Block Specifications		
Part Number	P2-RTB	P2-RTB-1
Number of positions	18 screw terminals	18 push release terminals
Wire Range	30–16 AWG (0.051–1.31 mm²) Solid/stranded conductor 3/64 in (1.2 mm) insulation max. 1/4 in (6–7 mm) strip length	28–16 AWG (0.081–1.31 mm²) Solid/stranded conductor 3/64 in (1.2 mm) insulation max. 19/64 in (7–8 mm) strip length
Conductors	USE COPPER CONDUCTORS, 75ºC or equivalent.	
Screw Driver Width	0.1 in. (2.5 mm) maximum	NA
Screw Size	M2	N/A
Screw Torque	2.5 lb·in (0.28 N·m)	N/A

** Recommended screw driver: P/N TW-SD-MSL-1.*

NOTE: The most recent Productivity Suite software and firmware versions may be required to support new modules and new features.

We recommend using prewired ZIPLink cables and connection modules. See Wiring Solutions.
If you wish to hand-wire your module, a removable terminal block is sold separately. Order part number P2-RTB or P2-RTB-1.

Analog Input Modules

P2-04AD-2 (cont'd)

General Specifications	
Operating Temperature	0º to 60ºC (32º to 140ºF)
Storage Temperature	-20º to 70ºC (-4º to 158ºF)
Humidity	5 to 95% (non-condensing)
Altitude	2,000 meters, max.
Pollution Degree	2
Environmental Air	No corrosive gases permitted
Vibration	IEC60068-2-6 (Test Fc)
Shock	IEC60068-2-27 (Test Ea)
Field to Logic Side Isolation	1800VAC applied for 1 second
Insulation Resistance	>10MΩ @ 500VDC
Heat Dissipation	1100mW
Overvoltage Category	II
Enclosure Type	Open equipment
Module Keying to Backplane	Electronic
Module Location	Any I/O slot in a Productivity2000 system
Field Wiring	Use ZIPLink wiring system or removable terminal block. See "Wiring Solutions".
Terminal Type (sold separately)	18-position removable terminal block
Weight	90g (3.2 oz)
Agency Approvals	UL 61010-1 and UL 61010-2-201 File E139594, Canada and USA CE (EN 61131-2 EMC, EN 61010-1 and EN 61010-2-201 Safety)*

** Meets EMC and Safety requirements. See CE D.O.C for details.*

Wiring Diagrams

Voltage Input Circuits

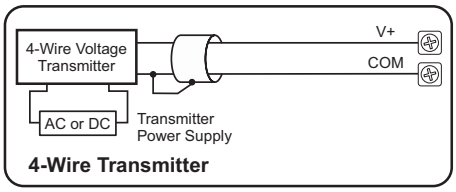

4-Wire Transmitter

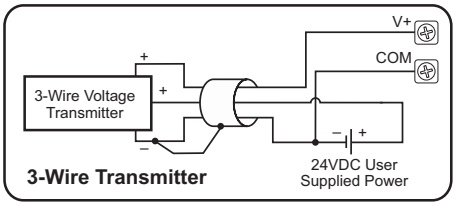

3-Wire Transmitter

Notes for maximum accuracy:
1. Jumper unused inputs to common.

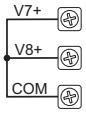

I/O Module Installation

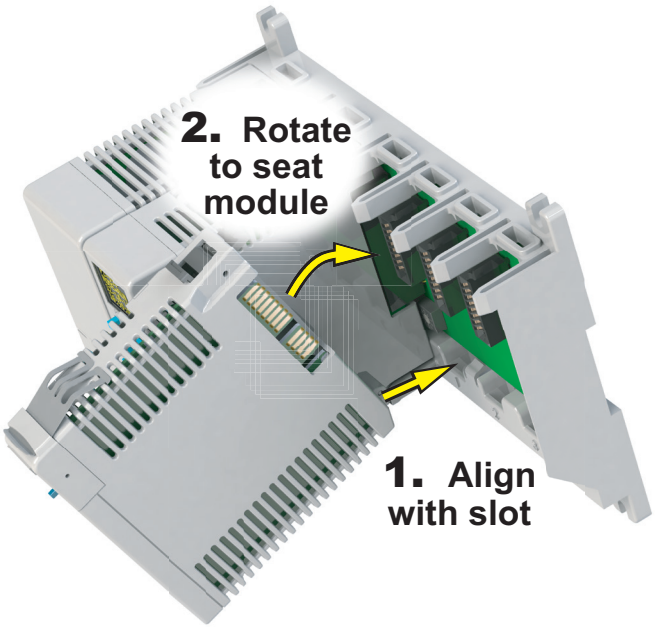

Analog Input Modules

P2-08AD-1 $303.00

Current Analog Input
The P2-08AD-1 Current Input Analog Module provides 8 channels for receiving 0 to 20 mA signals.

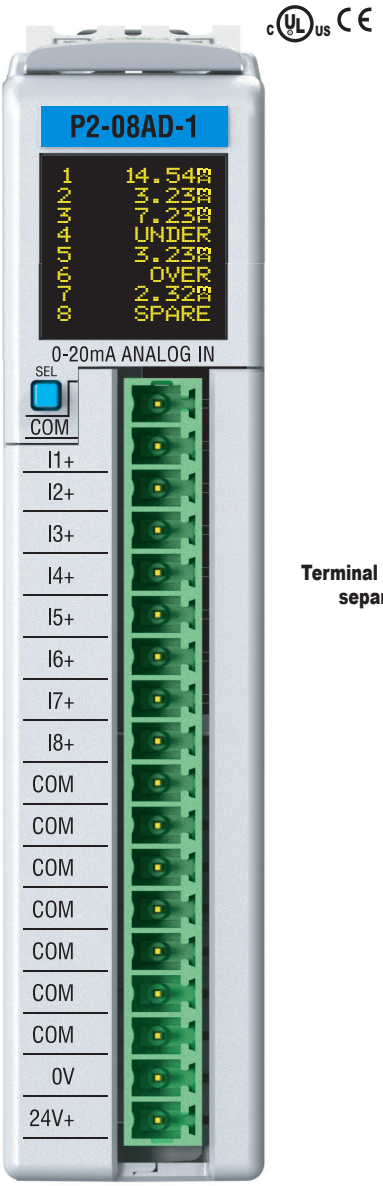

Terminal block sold separately.

We recommend using prewired ZIPLink cables and connection modules. See Wiring Solutions.
If you wish to hand-wire your module, a removable terminal block is sold separately. Order part number P2-RTB or P2-RTB-1.

Input Specifications	
Input Channels	8 sinking
Module Signal Input Range	0–20 mA
Signal Resolution	16-bit
Resolution Value of LSB (least significant bit)	0–20 mA = 0.305 µA per count (1 LSB = 1 count)
Data Range	0 to 65535 counts
Input Type	Single-ended (1 common)
Maximum Continuous Overload	±31mA
Input Impedance	250Ω ±0.1% 1/4 W
Filter Characteristics	Low Pass, -3dB @ 100Hz
Sample Duration Time	9ms per channel (does not include ladder scan time)
All Channel Update Rate	80ms
Open Circuit Detection Time	Zero reading within 1s
Conversion Method	Successive approximation
Accuracy vs. Temperature	±25PPM / °C maximum
Maximum Inaccuracy	0.1% of range (including temperature drift)
Linearity Error (end to end)	±0.015% of range Monotonic with no missing codes
Input Stability and Repeatability	±0.015% of range (After 10 min. warm-up)
Full Scale Calibration Error (not including offset)	±0.015% of range maximum
Offset Calibration Error	±0.015% of range maximum
Max Crosstalk	-76dB, ±10LSB
Recommended Fuse (external)	Edison S500-32-R, 0.032 A fuse
External DC Power Required	24VDC (-20% / +25%) 35mA

Removable Terminal Block Specifications		
Part Number	***P2-RTB***	***P2-RTB-1***
Number of positions	18 screw terminals	18 push release terminals
Wire Range	30–16 AWG (0.051–1.31 mm²) Solid/stranded conductor 3/64 in (1.2 mm) insulation max. 1/4 in (6–7 mm) strip length	28–16 AWG (0.081–1.31 mm²) Solid/stranded conductor 3/64 in (1.2 mm) insulation max. 19/64 in (7–8 mm) strip length
Conductors	USE COPPER CONDUCTORS, 75°C or equivalent.	
Screw Driver Width	0.1 in. (2.5 mm) maximum	NA
Screw Size	M2	N/A
Screw Torque	2.5 lb·in (0.28 N·m)	N/A

** Recommended screw driver: P/N TW-SD-MSL-1.*

Analog Input Modules

P2-08AD-1 (cont'd)

General Specifications	
Operating Temperature	0º to 60ºC (32º to 140ºF)
Storage Temperature	-20º to 70ºC (-4º to 158ºF)
Humidity	5 to 95% (non-condensing)
Altitude	2,000 meters, max.
Pollution Degree	2
Environmental Air	No corrosive gases permitted
Vibration	IEC60068-2-6 (Test Fc)
Shock	IEC60068-2-27 (Test Ea)
Field to Logic Side Isolation	1800VAC applied for 1 second
Insulation Resistance	>10MΩ @ 500VDC
Heat Dissipation	800mW
Overvoltage Category	II
Enclosure Type	Open equipment
Module Keying to Backplane	Electronic
Module Location	Any I/O slot in a Productivity2000 system
Field Wiring	Use ZIPLink wiring system or removable terminal block (not included). See Wiring Solutions.
Connector Type (Sold separately)	18-position removable terminal block
Weight	90g (3.2 oz)
Agency Approvals**	UL 61010-1 and UL 61010-2-201 File E139594, Canada & USA CE (EN 61131-2 EMC, EN 61010-1 and EN 61010-2-201 Safety)*

**Meets EMC and Safety requirements. See the Declaration of Conformity for details.*
***To obtain the most current agency approval information, see the Agency Approval Checklist section on the specific component part number web page.*

Wiring Diagrams

Current Input Circuits

An Edison S500-32-R 0.032A fast-acting fuse is recommended for current loops.

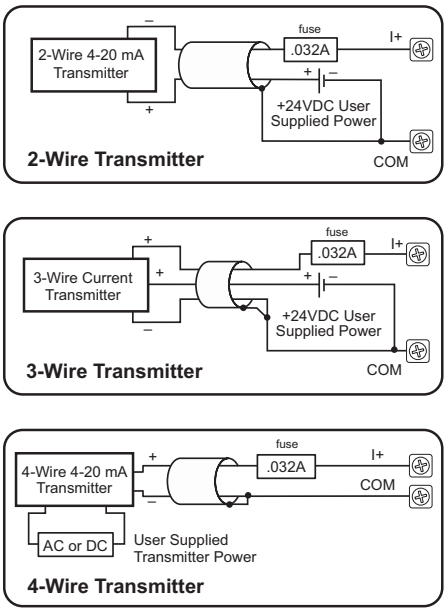

Note: Do not connect both ends of shield.

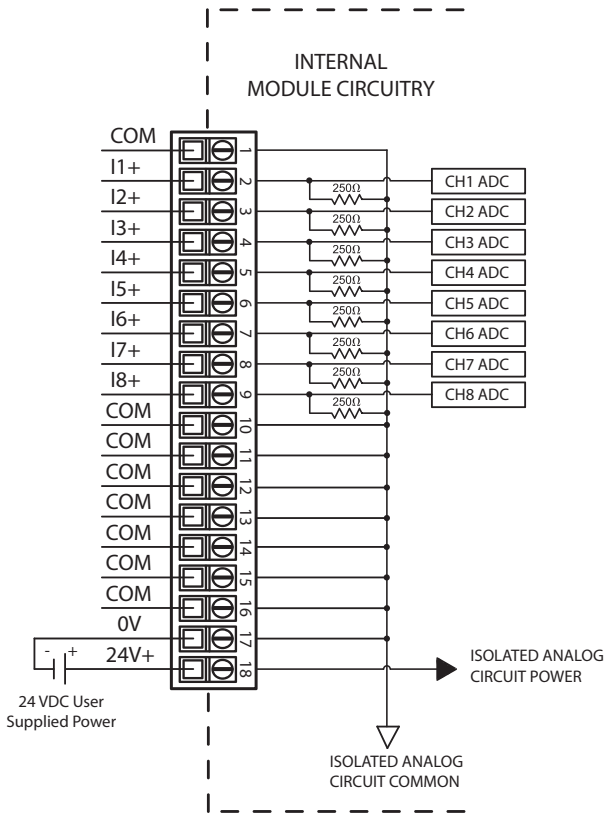

Analog Input Modules

P2-08AD-2 $333.00

Voltage Analog Input
The P2-08AD-2 Voltage Analog Input Module provides eight channels for receiving 0 to 10 VDC signals.

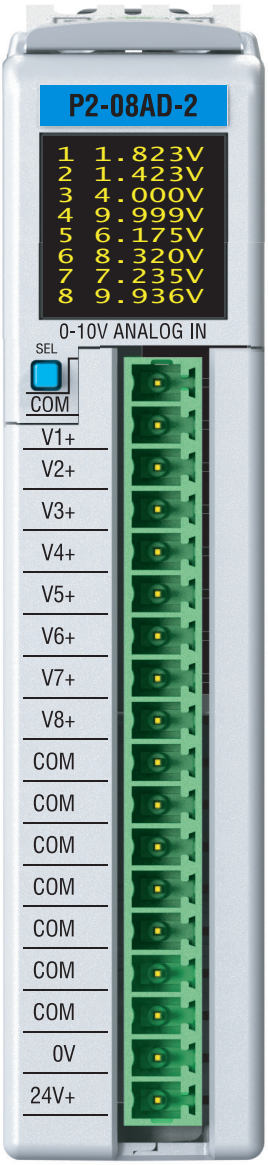

Terminal block sold separately.

Input Specifications	
Input Channels	8
Module Signal Input Range	0–10 VDC
Signal Resolution	16-bit
Resolution Value of LSB (least significant bit)	0–10 VDC = 152µV per count (1 LSB = 1 count)
Data Range	0 to 65535 counts
Input Type	Single-ended (1 common)
Maximum Continuous Overload	±100V
Input Impedance	250kΩ (typical)
Filter Characteristics	Low Pass, -3dB @ 100Hz
Sample Duration Time	7ms per channel (does not include ladder scan time)
All Channel Update Rate	80ms
Open Circuit Detection Time	Zero reading within 1s
Conversion Method	Successive approximation
Accuracy vs. Temperature	±25PPM / °C maximum
Maximum Inaccuracy	0.1% of range (including temperature drift)
Linearity Error (end to end)	±10 LSB maximum (±0.015% of range) Monotonic with no missing codes
Input Stability and Repeatability	±10 LSB
Full Scale Calibration Error (not including offset)	±10 LSB maximum (±0.015% of range)
Offset Calibration Error	±10 LSB maximum
Max Crosstalk	-76dB, ±10LSB
External DC Power Required	24VDC (-20% / +25%) 35mA

Removable Terminal Block Specifications		
Part Number	***P2-RTB***	***P2-RTB-1***
Number of positions	18 screw terminals	18 push release terminals
Wire Range	30–16 AWG (0.051–1.31 mm²) Solid/stranded conductor 3/64 in (1.2 mm) insulation max. 1/4 in (6–7 mm) strip length	28–16 AWG (0.081–1.31 mm²) Solid/stranded conductor 3/64 in (1.2 mm) insulation max. 19/64 in (7–8 mm) strip length
Conductors	USE COPPER CONDUCTORS, 75ºC or equivalent.	
Screw Driver Width	0.1 in. (2.5 mm) maximum	NA
Screw Size	M2	N/A
Screw Torque	2.5 lb·in (0.28 N·m)	N/A

** Recommended screw driver: P/N TW-SD-MSL-1*

We recommend using prewired ZIPLink cables and connection modules. See Wiring Solutions.
If you wish to hand-wire your module, a removable terminal block is sold separately. Order part number P2-RTB or P2-RTB-1.

Analog Input Modules

P2-08AD-2 (cont'd)

General Specifications	
Operating Temperature	0º to 60ºC (32º to 140ºF)
Storage Temperature	-20º to 70ºC (-4º to 158ºF)
Humidity	5 to 95% (non-condensing)
Altitude	2,000 meters, max.
Pollution Degree	2
Environmental Air	No corrosive gases permitted
Vibration	IEC60068-2-6 (Test Fc)
Shock	IEC60068-2-27 (Test Ea)
Field to Logic Side Isolation	1800VAC applied for 1 second
Insulation Resistance	>10MΩ @ 500VDC
Heat Dissipation	82mW
Overvoltage Category	II
Enclosure Type	Open equipment
Module Keying to Backplane	Electronic
Module Location	Any I/O slot in a Productivity2000 system
Field Wiring	Use ZIPLink wiring system or removable terminal block (not included). See Wiring Solutions
Connector Type (Sold separately)	18-position removable terminal block
Weight	90g (3.2 oz)
Agency Approvals*	UL 61010-1 and UL 61010-2-201 File E139594, Canada & USA CE (EN 61131-2 EMC, EN 61010-1 and EN 61010-2-201 Safety)*

**Meets EMC and Safety requirements. See the Declaration of Conformity for details.*
***To obtain the most current agency approval information, see the Agency Approval Checklist section on the specific component part number web page.*

Wiring Diagrams

Voltage Input Circuits

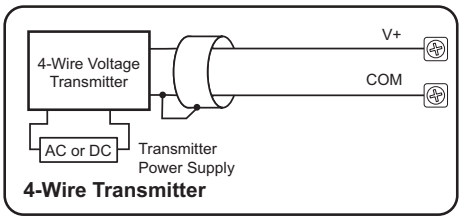

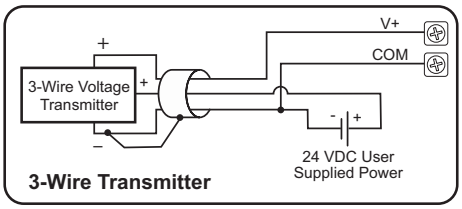

NOTE: For maximum accuracy jumper unused inputs to common.

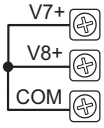

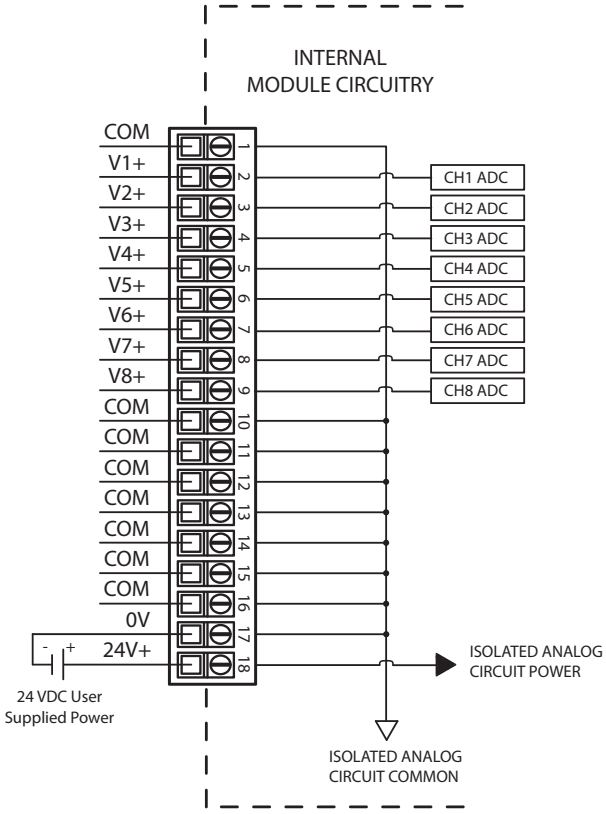

Analog Input Modules

P2-08ADL-1 $212.00

Current Analog Input

The P2-08ADL-1 Low Resolution Current Analog Input Module provides eight channels for receiving 0–20 mA signals.

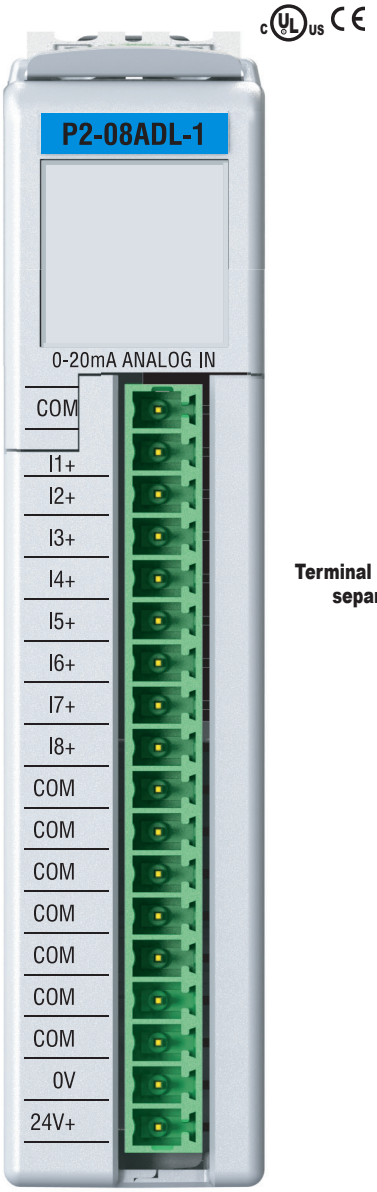

Terminal block sold separately.

Input Specifications	
Input Channels	8 sinking
Module Signal Input Range	0–20mA
Signal Resolution	13-bit
Resolution Value of LSB (least significant bit)	0–20mA = 2.44 µA per count (1LSB = 1 count)
Data Range	0–8191 counts
Input Type	Single-ended (1 common)
Maximum Continuous Overload	±31mA
Input Impedance	124Ω, ±0.5%, 1/2W Current Input
Filter Characteristics	Low Pass, -3dB @ 120Hz
Sample Duration Time	2ms per channel (does not include ladder scan time)
All Channel Update Rate	20ms
Open Circuit Detection Time	Zero reading within 100ms
Conversion Method	Successive approximation
Accuracy vs. Temperature	±75PPM / °C maximum
Maximum Inaccuracy	0.5% of range (including temperature drift)
Linearity Error (end to end)	±0.037% of range Monotonic with no missing codes
Input Stability and Repeatability	±0.024% of range
Full Scale Calibration Error (including offset)	±0.098% of range
Offset Calibration Error	±0.098% of range
Max Crosstalk	4 counts / ±0.048% of range
Recommended Fuse (external)	Edison S500-32-R, 0.032 A fuse
External DC Power Required	24VDC (-20% / + 25%), 30mA

Removable Terminal Block Specifications		
Part Number	***P2-RTB***	***P2-RTB-1***
Number of positions	18 screw terminals	18 push release terminals
Wire Range	30–16 AWG (0.051–1.31 mm²) Solid/stranded conductor 3/64 in (1.2 mm) insulation max. 1/4 in (6–7 mm) strip length	28–16 AWG (0.081–1.31 mm²) Solid/stranded conductor 3/64 in (1.2 mm) insulation max. 19/64 in (7–8 mm) strip length
Conductors	USE COPPER CONDUCTORS, 75ºC or equivalent.	
Screw Driver Width	0.1 in. (2.5 mm) maximum	NA
Screw Size	M2	N/A
Screw Torque	2.5 lb·in (0.28 N·m)	N/A

** Recommended screw driver: P/N TW-SD-MSL-1.*

NOTE: The most recent Productivity Suite software and firmware versions may be required to support new modules and new features.

We recommend using prewired ZIPLink cables and connection modules. See Wiring Solutions.
If you wish to hand-wire your module, a removable terminal block is sold separately. Order part number P2-RTB or P2-RTB-1.

Analog Input Modules

P2-08ADL-1 (cont'd)

General Specifications	
Operating Temperature	0º to 60ºC (32º to 140ºF)
Storage Temperature	-20º to 70ºC (-4º to 158ºF)
Humidity	5 to 95% (non-condensing)
Altitude	2,000 meters, max.
Pollution Degree	2
Environmental Air	No corrosive gases permitted
Vibration	IEC60068-2-6 (Test Fc)
Shock	IEC60068-2-27 (Test Ea)
Field to Logic Side Isolation	1800VAC applied for 1 second
Insulation Resistance	>10MΩ @ 500VDC
Heat Dissipation	1200mW
Overvoltage Category	II
Enclosure Type	Open equipment
Module Keying to Backplane	Electronic
Module Location	Any I/O slot in a Productivity2000 system
Field Wiring	Use ZIPLink wiring system or removable terminal block (not included). See Wiring Solutions.
Terminal Type	18-position Removable Terminal Block
Weight	100g (3.5 oz)
Agency Approvals**	UL 61010-1 and UL 61010-2-201 File E139594, Canada & USA CE (EN 61131-2 EMC, EN 61010-1 and EN 61010-2-201 Safety)*

**Meets EMC and Safety requirements. See the Declaration of Conformity for details.*
***To obtain the most current agency approval information, see the Agency Approval Checklist section on the specific component part number web page.*

Wiring Diagrams

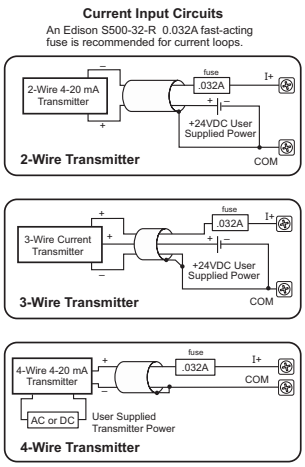

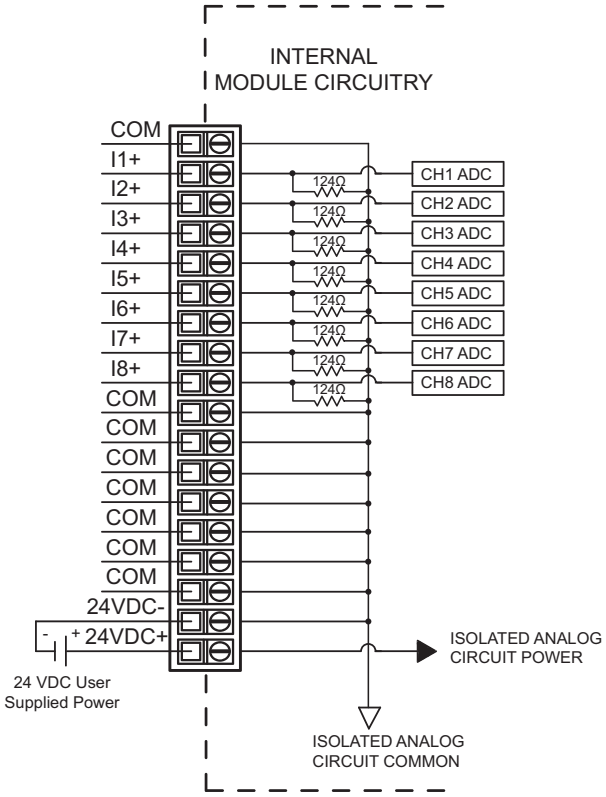

Analog Input Modules

P2-08ADL-2 $230.00

Voltage Analog Input

The P2-08ADL-2 Low Resolution Voltage Analog Input Module provides eight channels for receiving 0–10 VDC signals.

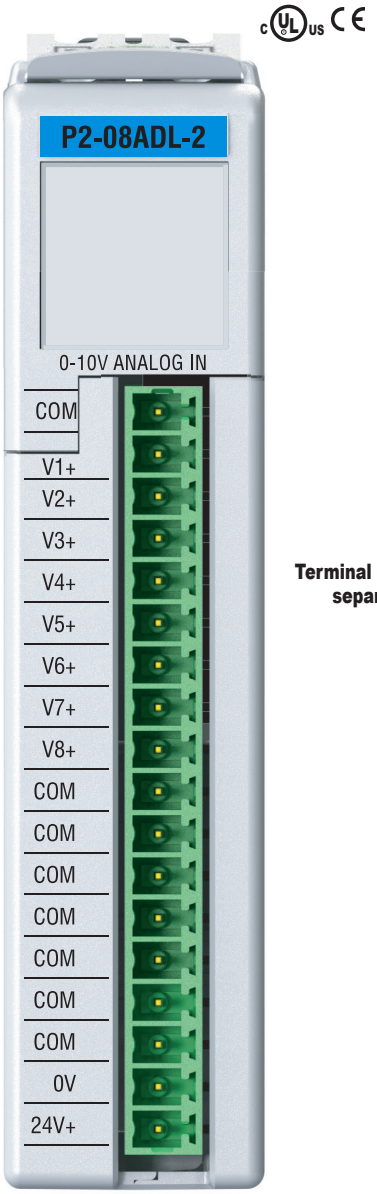

Terminal block sold separately.

NOTE: The most recent Productivity Suite software and firmware versions may be required to support new modules and new features.

We recommend using prewired ZIPLink cables and connection modules. See Wiring Solutions.
If you wish to hand-wire your module, a removable terminal block is sold separately. Order part number P2-RTB or P2-RTB-1.

Input Specifications	
Input Channels	8
Module Signal Input Range	0–10 VDC
Resolution	13-bit
Data Range	0-8191 counts
Input Type	Single-ended (1 common)
Resolution Value of LSB	0–10 VDC = 1.22 mV per count (1 LSB = 1 Count)
Maximum Continuous Overload	±100VDC
Input Impedance	>150kΩ
Filter Characteristics	Low Pass, -3dB @ 500Hz
Sample Duration Time	6.25 ms (does not include ladder scan time)
All Channel Update Rate	25ms
Accuracy vs. Temperature	±75PPM / ºC maximum
Maximum Inaccuracy	0.5% of range (including temperature drift)
Linearity Error (end to end)	±0.036% Monotonic with no missing codes
Input Stability and Repeatability	±0.024% of range
Full Scale Calibration Error (including offset)	±0.097% of range
Offset Calibration Error	±0.097% of range
Max Crosstalk	4 counts / 0.048% of range
External 24VDC Power Required	24VDC (-20% / +25%), 30mA

General Specifications	
Operating Temperature	0º to 60ºC (32º to 140ºF)
Storage Temperature	-20º to 70ºC (-4º to 158ºF)
Humidity	5 to 95% (non-condensing)
Altitude	2000 meters max.
Pollution Degree	2
Environmental Air	No corrosive gases permitted
Vibration	IEC60068-2-6 (Test Fc)
Shock	IEC60068-2-27 (Test Ea)
Field to Logic Side Isolation	1800VAC applied for 1 second
Insulation Resistance	> 10MΩ @ 500VDC
Heat Dissipation	1200mW
Overvoltage Category	II
Enclosure Type	Open equipment
Module Keying to Backplane	Electronic
Module Location	Any I/O slot in a Productivity2000 system
Field Wiring	Use ZIPLink wiring system or removable terminal block (not included). See Wiring Solutions.
Terminal Type	18-position Removable Terminal Block
Weight	100g (3.5 oz)
Agency Approvals**	UL 61010-1 and UL 61010-2-201 File E139594, Canada & USA CE (EN 61131-2 EMC, EN 61010-1 and EN 61010-2-201 Safety)*

**Meets EMC and Safety requirements. See the Declaration of Conformity for details.*
***To obtain the most current agency approval information, see the Agency Approval Checklist section on the specific component part number web page.*

Analog Input Modules

P2-08ADL-2 (cont'd)

Removable Terminal Block Specifications		
Part Number	***P2-RTB***	***P2-RTB-1***
Number of positions	18 screw terminals	18 push release terminals
Wire Range	30–16 AWG (0.051–1.31 mm²) Solid/stranded conductor 3/64 in (1.2 mm) insulation max. 1/4 in (6–7 mm) strip length	28–16 AWG (0.081–1.31 mm²) Solid/stranded conductor 3/64 in (1.2 mm) insulation max. 19/64 in (7–8 mm) strip length
Conductors	USE COPPER CONDUCTORS, 75ºC or equivalent.	
Screw Driver Width	0.1 in. (2.5 mm) maximum	NA
Screw Size	M2	N/A
Screw Torque	2.5 lb·in (0.28 N·m)	N/A

** Recommended screw driver: P/N TW-SD-MSL-1.*

Wiring Diagrams

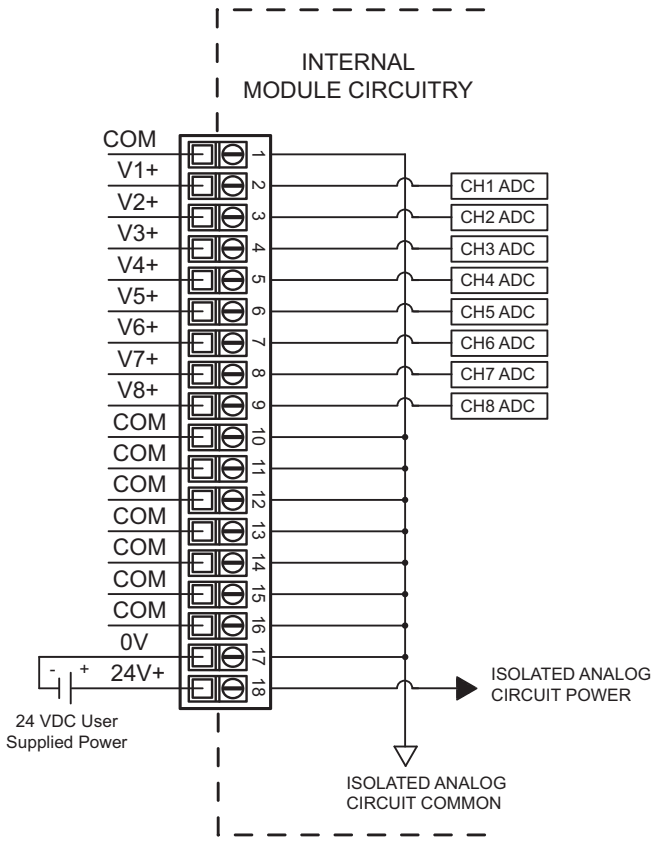

Diagnostic/Status	
Under Range Error	1 bit per channel
Over Range Error	1 bit per channel
Module Failed	1 bit per module
Missing 24V	1 bit per module

Voltage Input Circuits

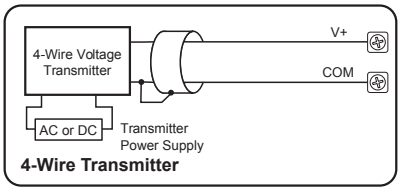

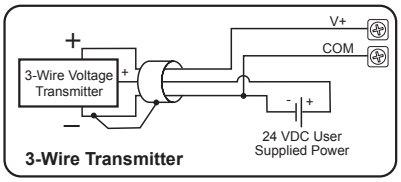

NOTE: *For maximum accuracy jumper unused inputs to common.*

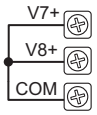

Analog Input Modules

P2-16AD-1 $366.00

Current Analog Input
The P2-16AD-1 Current Analog Input Module provides sixteen channels for receiving 0 to 20 mA input signals.

No terminal block sold for this module; ZIPLink required.

Input Specifications	
Input Channels	16 sinking
Module Signal Input Range	0–20mA
Signal Resolution	16-bit
Resolution Value of LSB (least significant bit)	0–20mA = 305µA per count (1 LSB = 1 count)
Data Range	0 to 65535 counts
Input Type	Single-ended (1 common)
Maximum Continuous Overload	±31mA
Input Impedance	250Ω ±0.1% 1/4 W
Filter Characteristics	Low Pass, -3dB @ 100Hz
Sample Duration Time	4ms per channel (does not include ladder scan time)
All Channel Update Rate	112ms
Open Circuit Detection Time	Zero reading within 1s
Conversion Method	Successive approximation
Accuracy vs. Temperature	±25PPM / °C maximum
Maximum Inaccuracy	0.1% of range (including temperature drift)
Linearity Error (end to end)	±10 LSB maximum (±0.015% of range) Monotonic with no missing codes
Input Stability and Repeatability	±10 LSB
Full Scale Calibration Error (not including offset)	±10 LSB maximum (±0.015% of range)
Offset Calibration Error	±10 LSB maximum
Max Crosstalk	-76dB, ±10 LSB
Recommended Fuse (external)	Edison S500-32-R, 0.032 A fuse
External DC Power Required	24VDC (-20% / +25%) 35mA

Connector Specifications	
Connector Type	24-Pin Molex Style 43025-2400
Number of Pins	24
Pin Spacing	3x3 mm (0.118 x 0.118 in)

We recommend using pre-wired ZIPLink cables and connection modules. See Wiring Solutions. Module connector type is a 24-pin Molex Style 43025-2400.

Analog Input Modules

P2-16AD-1 (cont'd)

General Specifications	
Operating Temperature	0º to 60ºC (32º to 140ºF)
Storage Temperature	-20º to 70ºC (-4º to 158ºF)
Humidity	5 to 95% (non-condensing)
Altitude	2,000 meters, max.
Pollution Degree	2
Environmental Air	No corrosive gases permitted
Vibration	IEC60068-2-6 (Test Fc)
Shock	IEC60068-2-27 (Test Ea)
Field to Logic Side Isolation	1800VAC applied for 1 second
Insulation Resistance	>10MΩ @ 500VDC
Heat Dissipation	800mW
Overvoltage Category	II
Enclosure Type	Open equipment
Module Keying to Backplane	Electronic
Module Location	Any I/O slot in a Productivity2000 system
Field Wiring	***ZIP***Link wiring system ONLY. See Wiring Solutions. Must use copper conductors 75°C or equivalent.
Connector Type	24-Pin Molex Style 43025-2400
Weight	90g (3.2 oz)
Agency Approvals**	UL 61010-1 and UL 61010-2-201 File E139594, Canada & USA CE (EN 61131-2 EMC, EN 61010-1 and EN 61010-2-201 Safety)*

**Meets EMC and Safety requirements. See the Declaration of Conformity for details.*
***To obtain the most current agency approval information, see the Agency Approval Checklist section on the specific component part number web page.*

Wiring Diagrams

Current Input Circuits

An Edison S500-32-R 0.032A fast-acting fuse is recommended for current loops.

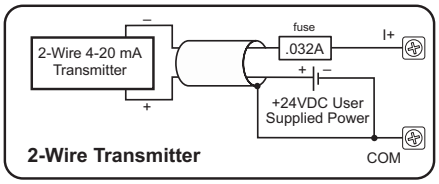

2-Wire Transmitter

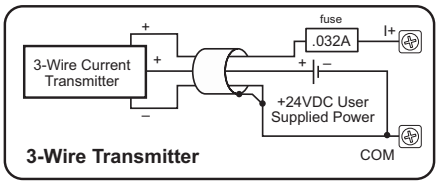

3-Wire Transmitter

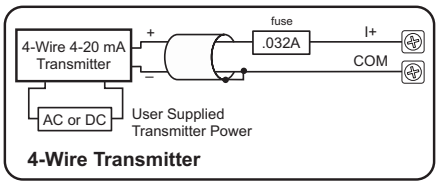

4-Wire Transmitter

Note: Do not connect both ends of shield.

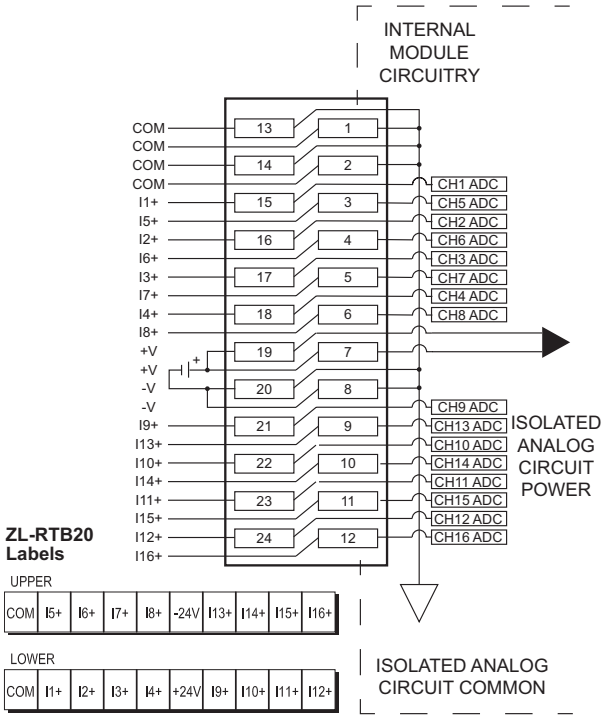

Analog Input Modules

P2-16AD-2 $406.00

Voltage Analog Input
The P2-16AD-2 Voltage Analog Input Module provides sixteen channels for receiving 0 to 10 VDC signals.

No terminal block sold for this module; ZIPLink required.

Input Specifications	
Input Channels	16
Module Signal Input Range	0–10 VDC
Signal Resolution	16-bit
Resolution Value of LSB (least significant bit)	0–10 VDC = 152µV per count (1 LSB = 1 count)
Data Range	0 to 65535 counts
Input Type	Single-ended (1 common)
Maximum Continuous Overload	±100V
Input Impedance	250kΩ (typical)
Filter Characteristics	Low Pass, -3dB @ 100Hz
Sample Duration Time	4ms per channel (does not include ladder scan time)
All Channel Update Rate	112ms
Open Circuit Detection Time	Zero reading within 1s
Conversion Method	Successive approximation
Accuracy vs. Temperature	±25PPM / ºC maximum
Maximum Inaccuracy	0.1% of range (including temperature drift)
Linearity Error (end to end)	±10 LSB maximum (±0.015% of range) Monotonic with no missing codes
Input Stability and Repeatability	±10 LSB
Full Scale Calibration Error (not including offset)	±10 LSB maximum (±0.015% of range)
Offset Calibration Error	±10 LSB maximum
Max Crosstalk	-76dB, ±10 LSB
External DC Power Required	24VDC (-20% / +25%) 35mA

General Specifications	
Operating Temperature	0º to 60ºC (32º to 140ºF)
Storage Temperature	-20º to 70ºC (-4º to 158ºF)
Humidity	5 to 95% (non-condensing)
Environmental Air	No corrosive gases permitted
Vibration	IEC60068-2-6 (Test Fc)
Shock	IEC60068-2-27 (Test Ea)
Field to Logic Side Isolation	1800VAC applied for 1 second
Insulation Resistance	> 10MΩ @ 500VDC
Heat Dissipation	800mW
Enclosure Type	Open equipment
Module Keying to Backplane	Electronic
Module Location	Any I/O slot in a Productivity2000 system
Field Wiring	ZIPLink wiring system ONLY. See Wiring Solutions. Must use copper conductors 75ºC or equivalent.
Connector Type	24-Pin Molex Style 43025-2400
Weight	90g (3.2 oz)
Agency Approvals**	UL 61010-1 and UL 61010-2-201 File E139594, Canada & USA CE (EN 61131-2 EMC, EN 61010-1 and EN 61010-2-201 Safety)*

**Meets EMC and Safety requirements. See the Declaration of Conformity for details.*
***To obtain the most current agency approval information, see the Agency Approval Checklist section on the specific component part number web page.*

We recommend using pre-wired ZIPLink cables and connection modules. See Wiring Solutions.
Module connector type is a 24-pin Molex Style 43025-2400.

Analog Input Modules

P2-16AD-2 (cont'd)

Connector Specifications	
Connector Type	24-Pin Molex Style 43025-2400
Number of Pins	24
Pin Spacing	3x3 mm (0.118 x 0.118 in)

Wiring Diagrams

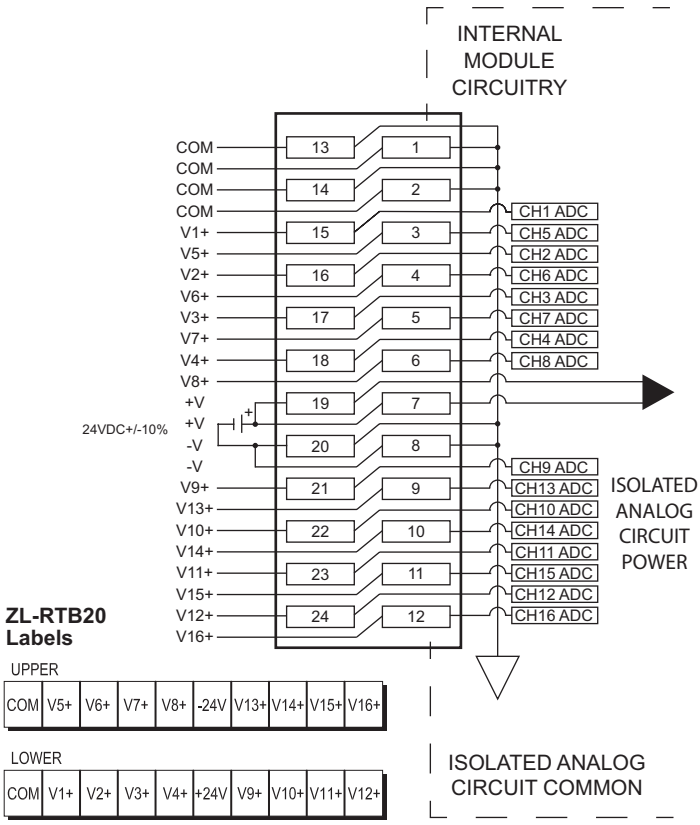

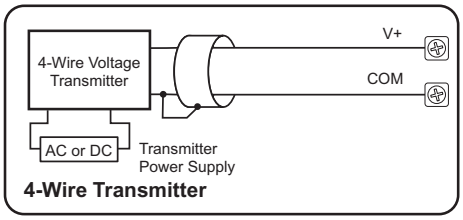

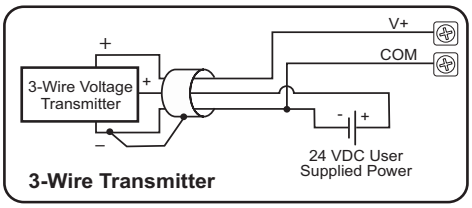

Note: For maximum accuracy jumper unused inputs to common.

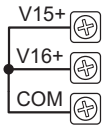

Analog Input Modules

P2-16ADL-1 $261.00

Current Analog Input

The P2-16ADL-1 Low Resolution Current Analog Input Module provides sixteen channels for receiving 0–20 mA signals.

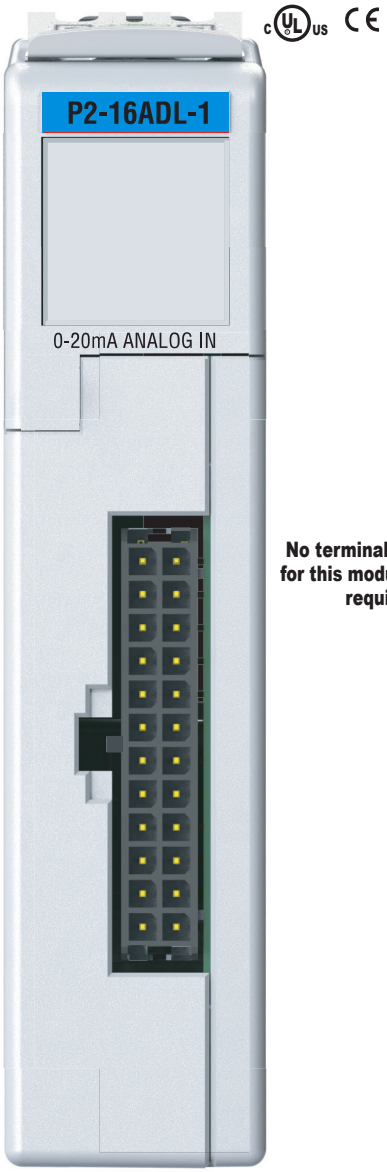

No terminal block sold for this module; ZIPLink required.

Input Specifications	
Input Channels	16 sinking
Module Signal Input Range	0–20mA
Signal Resolution	13-bit
Resolution Value of LSB (least significant bit)	0–20mA = 2.44 µA per count (1 LSB = 1 count)
Data Range	0-8191 counts
Input Type	Sinking, Single-ended (1 common)
Maximum Continuous Overload	±31mA
Input Impedance	124Ω, ±0.5% 1/2W Current Input
Filter Characteristics	Low Pass, -3dB @ 120Hz
Sample Duration Time	2ms per channel (does not include ladder scan time)
All Channel Update Rate	25ms
Open Circuit Detection Time	Zero reading within 100ms
Conversion Method	Successive approximation
Accuracy vs. Temperature	±75PPM / °C maximum
Maximum Inaccuracy	0.5% of range (including temperature changes)
Linearity Error (end to end)	±0.036% count maximum Monotonic with no missing codes
Input Stability and Repeatability	±0.024% of range
Full Scale Calibration Error (including offset)	±0.097% of range
Offset Calibration Error	±0.097% of range
Max Crosstalk	4 counts / 0.048% of range
Recommended Fuse (external)	Edison S500-32-R, 0.032 A fuse
External DC Power Required	24VDC (-20% / +25%) @ 35mA

Connector Specifications	
Connector Type	24-Pin Molex Style 43025-2400
Number of Pins	24
Pin Spacing	3x3 mm (0.118 x 0.118 in)

NOTE: The most recent Productivity Suite software and firmware versions may be required to support new modules and new features.

We recommend using pre-wired ZIPLink cables and connection modules. See Wiring Solutions. Module connector type is a 24-pin Molex Style 43025-2400.

Analog Input Modules

P2-16ADL-1 (cont'd)

General Specifications	
Operating Temperature	0º to 60ºC (32º to 140ºF)
Storage Temperature	-20º to 70ºC (-4º to 158ºF)
Humidity	5 to 95% (non-condensing)
Altitude	2,000 meters, max.
Pollution Degree	2
Environmental Air	No corrosive gases permitted
Vibration	IEC60068-2-6 (Test Fc)
Shock	IEC60068-2-27 (Test Ea)
Field to Logic Side Isolation	1800VAC applied for 1 second
Insulation Resistance	>10MΩ @ 500VDC
Heat Dissipation	1100mW maximum
Overvoltage Category	II
Enclosure Type	Open equipment
Module Keying to Backplane	Electronic
Module Location	Any I/O slot in a Productivity2000 system
Field Wiring	Use ZIPLink wiring system ONLY. See Wiring Solutions. Must use copper conductors 75°C or equivalent.
Weight	100g (3.5 oz)
Agency Approvals*	UL 61010-1 and UL 61010-2-201 File E139594, Canada & USA CE (EN 61131-2 EMC, EN 61010-1 and EN 61010-2-201 Safety)*

**Meets EMC and Safety requirements. See the Declaration of Conformity for details.*
***To obtain the most current agency approval information, see the Agency Approval Checklist section on the specific component part number web page.*

Wiring Diagrams

Current Input Circuits

An Edison S500-32-R 0.032A fast-acting fuse is recommended for current loops.

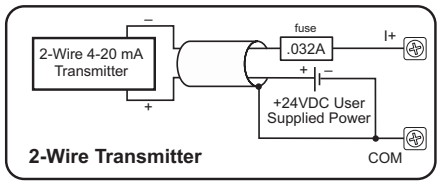

2-Wire Transmitter

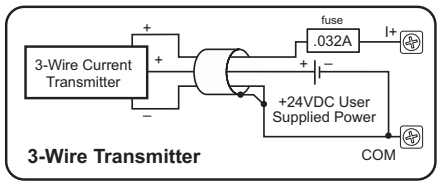

3-Wire Transmitter

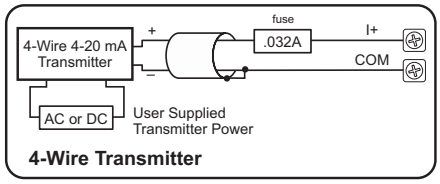

4-Wire Transmitter

Note: Do not connect both ends of shield.

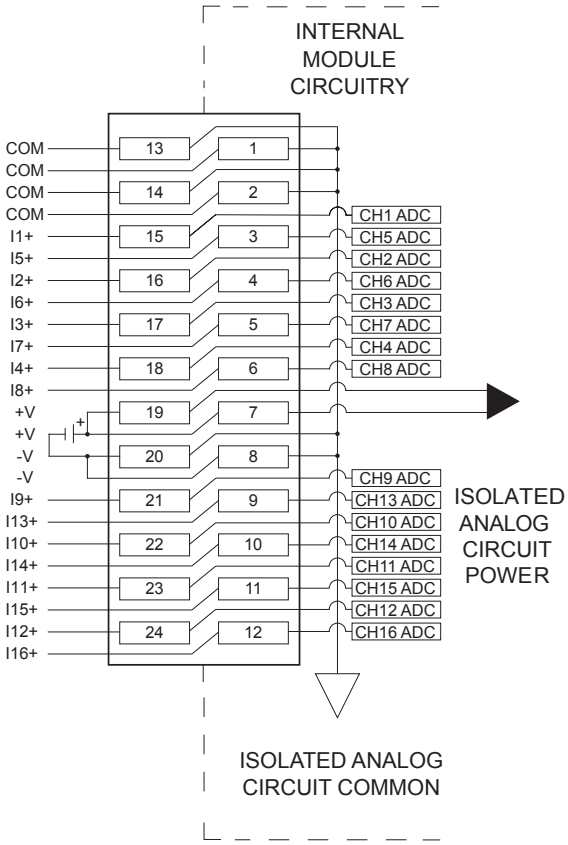

Analog Input Modules

P2-16ADL-2 $289.00

Voltage Analog Input

The P2-16ADL-2 Low Resolution Voltage Analog Input Module provides sixteen channels for receiving 0–10 VDC signals.

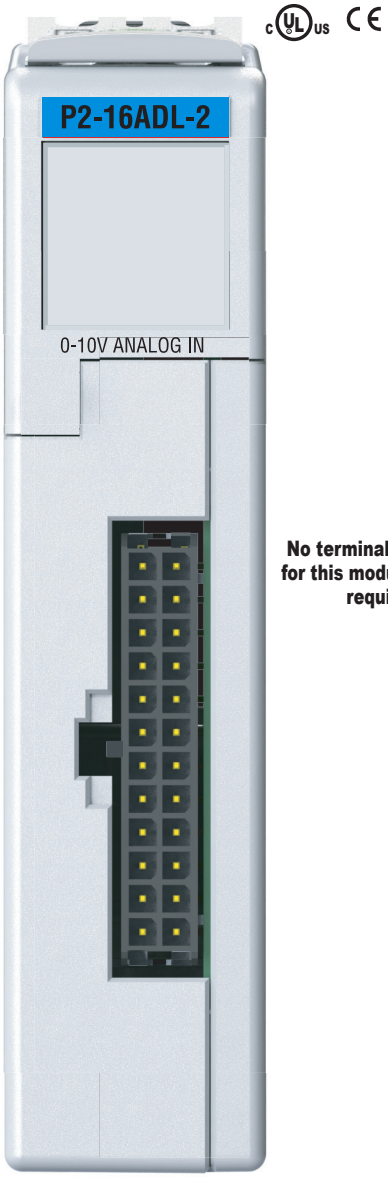

No terminal block sold for this module; ZIPLink required.

NOTE: The most recent Productivity Suite software and firmware versions may be required to support new modules and new features.

We recommend using pre-wired ZIPLink cables and connection modules. See Wiring Solutions. Module connector type is a 24-pin Molex Style 43025-2400.

Input Specifications	
Input Channels	16
Module Signal Input Range	0–10 VDC
Signal Resolution	13-bit
Resolution of LSB (least significant bit)	0–10 VDC = 1.22 mV per count (1LSB = 1 count)
Data Range	0–8191 counts
Input Type	Single-ended (1 common)
Maximum Continuous Overload	±100VDC
Input Impedance	>150kΩ
Filter Characteristics	Low Pass, -3dB @ 500Hz
Sample Duration Time	6.25 ms per channel (does not include ladder scan time)
All Channel Update Rate	25ms
Accuracy vs. Temperature	±75PPM / ºC maximum
Conversion Method	Successive approximation
Maximum Inaccuracy	0.5% of range (including temperature drift)
Linearity Error (end to end)	±0.036% count maximum Monotonic with no missing codes
Input Stability and Repeatability	±0.024% of range
Full Scale Calibration Error (including offset)	±0.097% of range
Offset Calibration Error	±0.097% of range
Max Crosstalk	4 counts / 0.048% of range
External 24VDC Power Required	24VDC (-20% / +25%), 35mA

General Specifications	
Surrounding Air Temperature	0º to 60ºC (32º to 140ºF)
Storage Temperature	-20º to 70ºC (-4º to 158ºF)
Humidity	5 to 95% (non-condensing)
Altitude	2000 meters max.
Pollution Degree	2
Environmental Air	No corrosive gases permitted
Vibration	IEC60068-2-6 (Test Fc)
Shock	IEC60068-2-27 (Test Ea)
Field to Logic Side Isolation	1800VAC applied for 1 second
Insulation Resistance	>10MΩ @ 500VDC
Heat Dissipation	1100mW max
Overvoltage Category	II
Enclosure Type	Open equipment
Module Keying to Backplane	Electronic
Module Location	Any I/O slot in a Productivity2000 system
Field Wiring	ZIPLink wiring system ONLY. See Wiring Solutions. Must use copper conductors 75ºC or equivalent.
Weight	102g (3.6 oz)
Agency Approvals**	UL 61010-1 and UL 61010-2-201 File E139594, Canada & USA CE (EN 61131-2 EMC, EN 61010-1 and EN 61010-2-201 Safety)*

**Meets EMC and Safety requirements. See the Declaration of Conformity for details.*
***To obtain the most current agency approval information, see the Agency Approval Checklist section on the specific component part number web page.*

Analog Input Modules

P2-16ADL-2 (cont'd)

Connector Specifications	
Connector Type	24-Pin Molex Style 43025-2400
Number of Pins	24
Pin Spacing	3x3 mm (0.118 x 0.118 in)

Diagnostic/Status	
Under Range Error	1 bit per channel
Over Range Error	1 bit per channel
Module Failed	1 bit per module
Missing 24V	1 bit per module

Wiring Diagrams

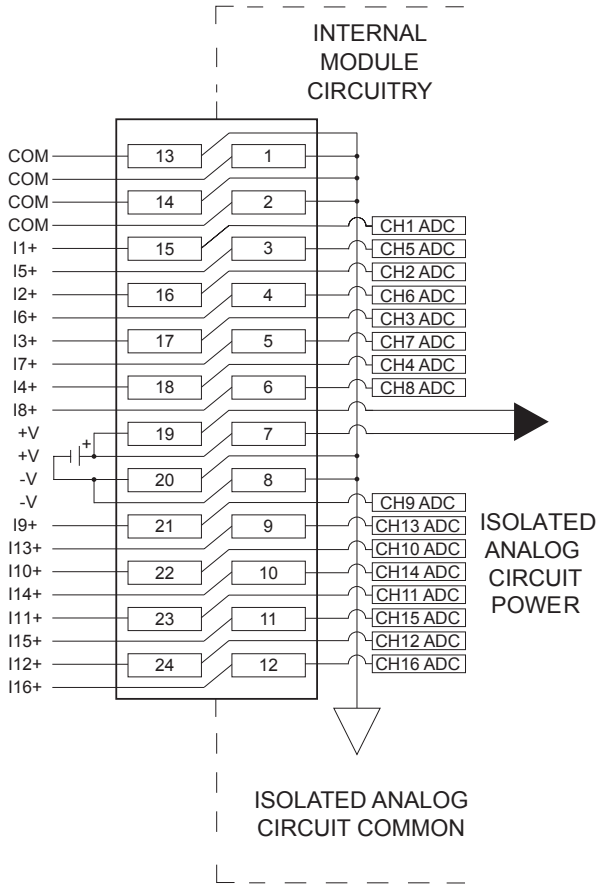

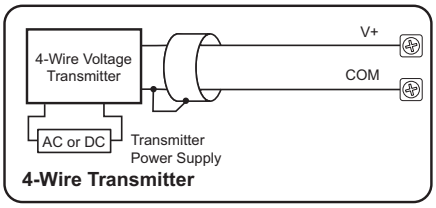

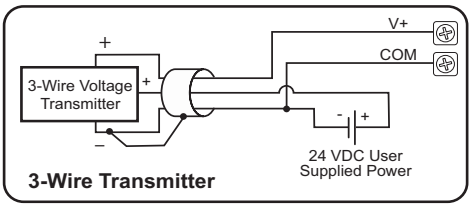

NOTE: For maximum accuracy jumper unused inputs to common.

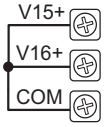

Analog Input Modules

P2-06RTD $476.00

RTD Analog Input

The P2-06RTD input module provides six differential channels for receiving RTD and resistance input signals.

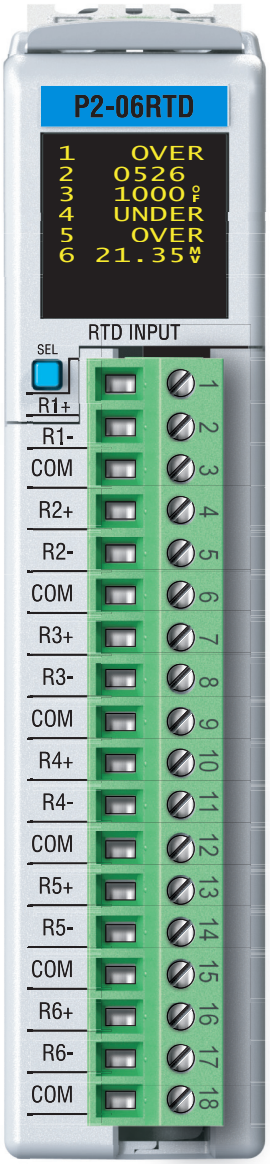

Terminal block included

RTD Input Specifications		
Input Channels	6 Differential	
Max. Common Mode Voltage	5VDC	
Data Format	Floating Point	
Common Mode Rejection	-90dB min. @ DC, -150dB min. @ 50/60 Hz	
Absolute Maximum Ratings	Fault protected input, ±50V	
Internal Resolution	16-bit, ±0.1°C or °F (up to 100Hz filter)	
Input Ranges (RTD Types)	Pt100 Pt1000 JPt100 10Ω Cu. 25Ω Cu. 120Ω Ni.	-200°C/850°C (-328°F/1562°F) -200°C/595°C (-328°F/1103°F) -100°C/450°C (-148°F/842°F) -200°C/260°C (-328°F/500°F) -200°C/260°C (-328°F/500°F) -80°C/260°C (-112°F/500°F)
RTD Linearization	Automatic	
Excitation Current (all ranges)	200µA	
Accuracy vs. Temperature	±5PPM per °C (maximum)	
Full Scale Calibration	±1°C	
Offset Calibration Error	±1 count (negligible)	
Linearity Error (end to end)	±0.5°C maximum, ±0.01°C typical, Monotonic with no missing codes	
Maximum Inaccuracy	±1°C maximum (excluding RTD error) (including temperature drift)	
Warm-up Time	2 minutes for ±0.2% repeatability	
Sample Duration (Single channel update rate)	Dependent on digital Filter Settings – 488ms @ 10Hz, 88ms @ 50Hz, 75ms @ 60Hz, 56ms @ 100Hz, 48ms @ 250Hz	
Filter Characteristics	Digital filter cutoff frequencies: 10Hz, 50Hz, 60Hz, 100Hz, or 250Hz	
All Channel Update Rate	Single channel update rate times the number of enabled channels	
Open Circuit Detection Time	Positive full scale reading within 2s	
Conversion Method	Sigma-Delta	
External DC Power Required	None	

Terminal Block Included. Not Compatible with ZIPLink.
Warranty: Thirty-day money-back guarantee. Two-year limited replacement. (See www.productivity2000.com for details).

Analog Input Modules

P2-06RTD (cont'd)

General Specifications	
Operating Temperature	0º to 60ºC (32º to 140ºF)
Storage Temperature	-20º to 70ºC (-4º to 158ºF)
Humidity	5 to 95% (non-condensing)
Environmental Air	No corrosive gases permitted
Vibration	IEC60068-2-6 (Test Fc)
Shock	IEC60068-2-27 (Test Ea)
Heat Dissipation	300mW
Enclosure Type	Open equipment
Module Keying to Backplane	Electronic
Module Location	Any I/O slot in a Productivity2000 system
Field Wiring	Removable terminal block (included). The P2-06RTD module is not compatible with the ZIPLink wiring system.
Connector Type (included)	18-position removable terminal block
Weight	90g (3.2 oz)
Agency Approvals**	UL508 File E139594, Canada & USA CE (EN61131-2*)

**Meets EMC and Safety requirements. See the Declaration of Conformity for details.*
***To obtain the most current agency approval information, see the Agency Approval Checklist section on the specific component part number web page.*

Removable Terminal Block Specifications		
Part Number	P2-RTB	P2-RTB-1
Number of positions	18 screw terminals (Included)	18 push release terminals
Wire Range	30–16 AWG (0.051–1.31 mm²) Solid/stranded conductor 3/64 in (1.2 mm) insulation max. 1/4 in (6–7 mm) strip length	28–16 AWG (0.081–1.31 mm²) Solid/stranded conductor 3/64 in (1.2 mm) insulation max. 19/64 in (7–8 mm) strip length
Conductors	USE COPPER CONDUCTORS, 75ºC or equivalent.	
Screw Driver Width	0.1 in. (2.5 mm) maximum	NA
Screw Size	M2	N/A
Screw Torque	2.5 lb·in (0.28 N·m)	N/A

** Recommended screw driver: P/N TW-SD-MSL-1.*

Diagnostics	
Module Diagnostics Failure	1 bit per module
Module Not Ready	1 bit per module
Channel Burn-out (RTD only)	1 bit per channel
Under-range (RTD only)	1 bit per channel
Over-range	1 bit per channel

Analog Input Modules

P2-06RTD (cont'd)

Resistance Input Specifications	
Internal Resolution	16 bit, .0015% of full scale range in ohms (up to 100Hz filter)
Resistance Input Ranges and CPU Resolution	0–10,000Ω, Resolution 1Ω 0–6,250Ω, Resolution 0.1 Ω 0–3,125Ω, Resolution 0.1 Ω 0–1,562.5 Ω, Resolution 0.1 Ω 0–781.25 Ω, Resolution 0.1 Ω 0–390.625 Ω, Resolution .01 Ω 0–195.3125 Ω, Resolution .01 Ω
Accuracy vs. Temperature	±25PPM per °C (maximum)
Full Scale Calibration	±0.02% of full scale range
Offset Calibration Error	±0.0015% of full scale range in ohms
Linearity Error (end to end)	±0.0015% of full scale range maximum at 25°C, Monotonic with no missing codes
Maximum Inaccuracy	±0.10% of full scale range

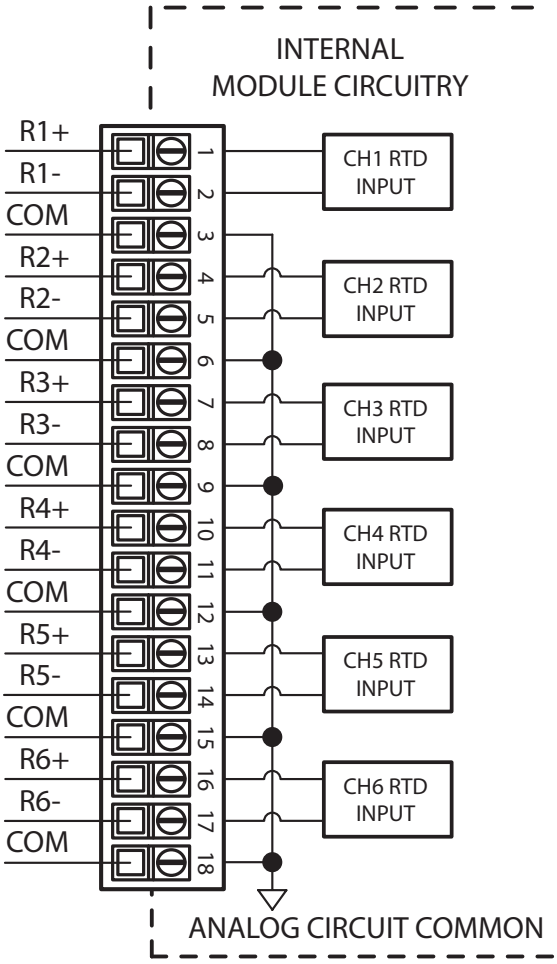

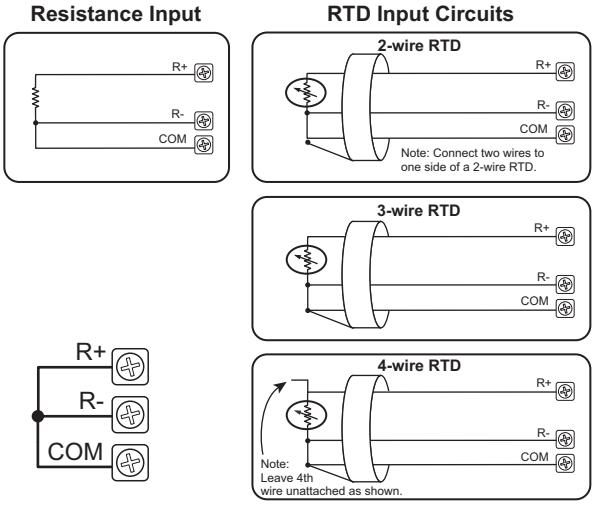

Notes:
For maximum accuracy follow these guidelines.
1. For 2-wire RTD, attach third wire to module common.
2. R+, R-, and COM wires to an RTD must be equal length and type. Refer to RTD manufacturer's recommendations.
3. Do not use cable shield as sensing wire.
4. When applicable, connect shield to RTD common only, otherwise connect to module common only. Do not connect shield at both ends.
5. For maximum accuracy jumper unused inputs to common

Analog Input Modules

P2-08THM $468.00

Thermocouple Analog Input
The P2-08THM Thermocouple Input Module provides eight differential channels for receiving thermocouple and voltage input signals.

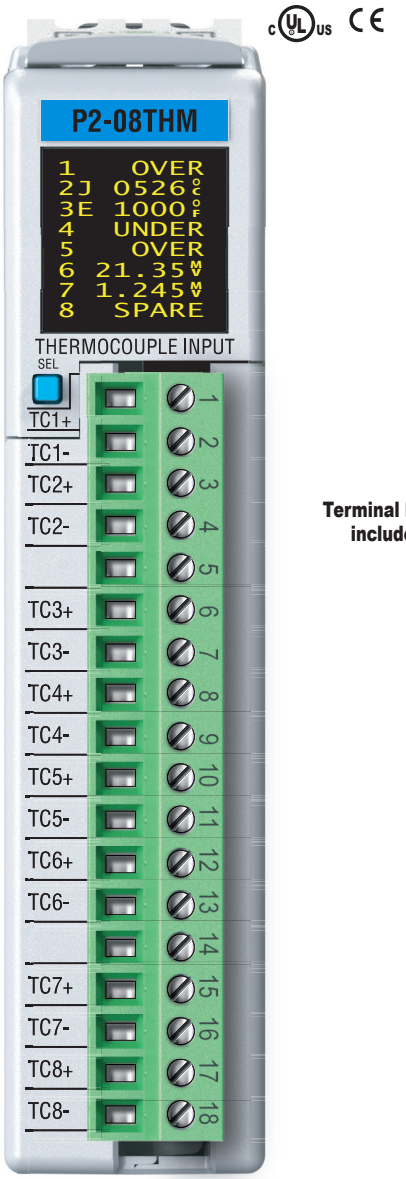

Terminal block included

Thermocouple Input Specifications	
Input Channels	8 Differential
Data Format	Floating Point
Common Mode Range	±1.25 V
Common Mode Rejection	100dB @ DC and 130dB @ 60Hz
Input Impedance	>5MΩ
Maximum Ratings	Fault protected inputs to ±50V
Resolution	16-bit, ±0.1°C or °F
Thermocouple Input Ranges	Type J -190° to 760°C (-310° to 1400°F); Type E -210° to 1000°C (-346° to 1832°F); Type K -150° to 1372°C (-238° to 2502°F); Type R 65° to 1768°C (149° to 3214°F); Type S 65° to 1768°C (149° to 3214°F); Type T -230° to 400°C (-382° to 752°F); Type B 529° to 1820°C (984° to 3308°F); Type N -70° to 1300°C (-94° to 2372°F); Type C 65° to 2320°C (149° to 4208°F);
Cold Junction Compensation	Automatic
Thermocouple Linearization	Automatic
Accuracy vs. Temperature	±50PPM per °C (maximum)
Linearity Error	±1°C maximum (±0.5°C typical) Monotonic with no missing codes.
Maximum Inaccuracy	±3°C maximum (including temperature drift but excluding thermocouple error).
Warm-up Time	30 minutes for ±1% repeatability 2 minutes to reach voltage specifications
Sample Duration Time	270ms
All Channel Update Rate	2.16 s
Open Circuit Detection Time	Within 2s
Conversion Method	Sigma-Delta
External DC Power Required	None

Removable Terminal Block Specifications		
Part Number	***P2-RTB (included)***	***P2-RTB-1***
Number of positions	18 screw terminals	18 spring clamp terminals
Wire Range*	30–16 AWG (0.051–1.31 mm²) Solid / stranded conductor 3/64 in (1.2 mm) insulation maximum 1/4 in (6–7 mm) strip length	28–16 AWG (0.081–1.31 mm²) Solid / stranded conductor 3/64 in (1.2 mm) insulation maximum 19/64 in (7–8 mm) strip length
Conductors*	Use Thermocouple Extension wire for thermocouples. Use copper conductors, 75°C or equivalent for millivolt inputs.	
Screw Driver Width	0.1 in (2.5 mm) maximum	N/A
Screw Size	M2	N/A
Screw Torque	2.5 lb·in (0.28 N·m)	N/A

** Use shielded, twisted thermocouple wire that matches the thermocouple type.*

Analog Input Modules

P2-08THM (cont'd)

Configuration/Diagnostics	
Burn-out Detection: High Side/ Disable	1 bit per module
°C/°F (T/C Only)	1 bit per module
Module Diagnostics Failure	1 bit per module
Burn-out (on if T/C input is open – no connection between TCn+ and TCn-)	1 bit per channel
Channel Under-range (T/C only)	1 bit per channel
Channel Over-range (T/C only)	1 bit per channel

Voltage Input Specifications	
Linear mV Device Input Ranges	0–39.0625 mVDC, ±39.0625 mVDC, ±78.125 mVDC, 0–156.25 mVDC, ±156.25 mVDC, 0–1250 mVDC
Max Voltage Input Offset Error	0.05% @ 0°- 60°C, typical 0.04% @ 25°C
Max Voltage Input Gain Error	0.06% @ 25°C
Max Voltage Input Linearity Error	0.05% @ 0°- 60°C, typical 0.03% @ 25°C
Max Voltage Input Impedance	0.2% @ 0° - 60°C, typical 0.06% @ 25°C

General Specifications	
Operating Temperature	0º to 60ºC (32º to 140ºF)
Storage Temperature	-20º to 70ºC (-4º to 158ºF)
Humidity	5 to 95% (non-condensing)
Environmental Air	No corrosive gases permitted
Vibration	IEC60068-2-6 (Test Fc)
Shock	IEC60068-2-27 (Test Ea)
Field to Logic Side Isolation	1800VAC applied for 1 second
Heat Dissipation	500mW
Enclosure Type	Open equipment
Module Keying to Backplane	Electronic
Module Location	Any I/O slot in a Productivity2000 system
Field Wiring	Removable terminal block (included). The P2-08THM module is not compatible with the ZIPLink wiring system.
Connector Type (included)	18-position removable terminal block
Weight	90g (3.2 oz)
Agency Approvals**	UL508 File E139594, Canada & USA CE (EN61131-2*)

**Meets EMC and Safety requirements. See the Declaration of Conformity for details.*
***To obtain the most current agency approval information, see the Agency Approval Checklist section on the specific component part number web page.*

Analog Input Modules

P2-08THM (cont'd)

Wiring Diagrams

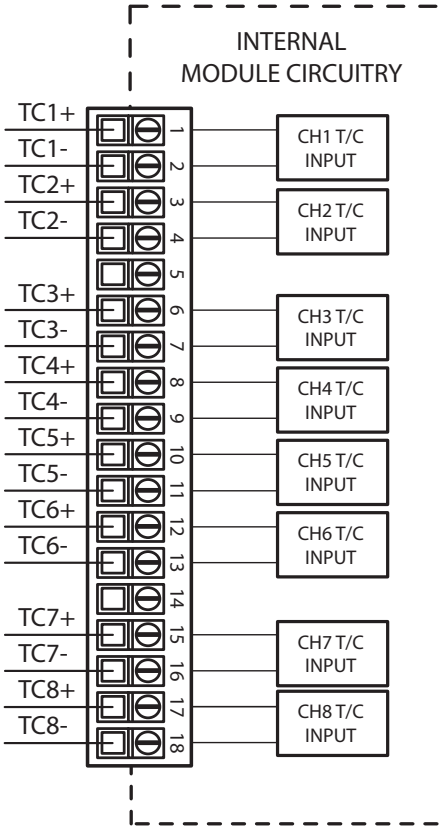

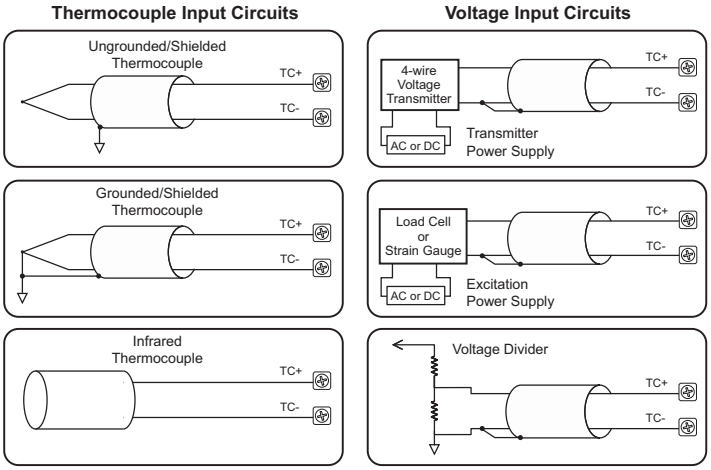

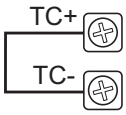

NOTE: Install jumper wire on each unused input; TC+, TC-.

NOTES:

1. Connect shield to thermocouple signal/ground only. Do not connect to both ends.
2. With grounded thermocouples, take precautions to prevent having a voltage potential between thermocouple tips. A voltage of 1.25V or greater between tips will skew measurements.
3. Use shielded, twisted thermocouple extension wire that matches the thermocouple type. Use thermocouple-compatible junction blocks.

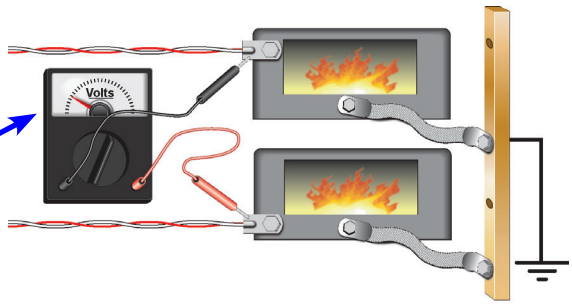

Analog Input Modules

P2-08NTC $424.00

Thermistor Analog Input
The P2-08NTC Thermistor Input Module provides eight Thermistor input channels.

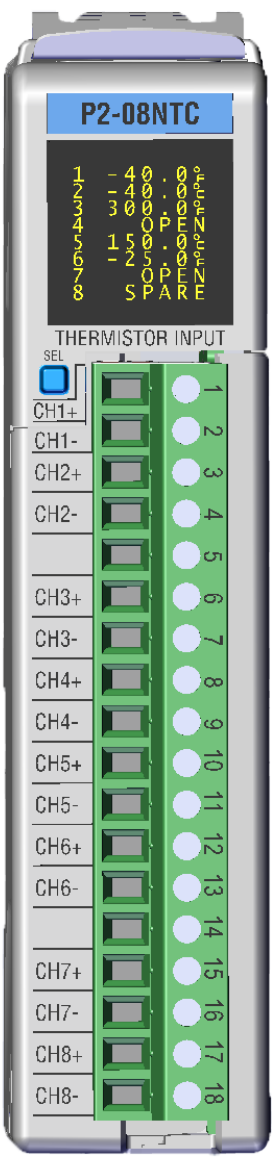

Terminal block included

NTC Input Specifications		
Input Channels	8 Single Ended (Temperature only)	
Data Format	Floating Point	
Common Mode Rejection	-97dB @ DC, >50dB @ 50/60Hz*	
Input Impedance	>5MΩ	
Maximum Ratings	Fault protected inputs to ±50V	
Resolution	16-bit, ±0.1°C or °F	
Thermistor Input Ranges	2252 10K-AN Type 3 10K-CP Type 2 5K 3K 1.8K	-40° to 150°C (-40° to 302°F)
Thermistor Linearization	Automatic	
Maximum Inaccuracy	±0.5°C maximum (8, 16 and 33Hz) ±1°C maximum (123 and 470Hz) (Excluding thermistor error; Including temperature drift)	
Excitation Current	10uA–210uA autoscaling	
Accuracy vs. Temperature	±35PPM per °C (maximum)	
Linearity Error	Non-linear	
Warm-up Time	30 minutes for ±1°C repeatability	
Sample Duration Time (Single channel update rate)	Dependent on digital filter settings 61ms @ 33Hz, 16ms @123Hz, 4ms @ 470Hz	
File Characteristics*	Digital filter cutoff frequencies: 33Hz, 123Hz, or 470Hz.	
All Channel Update Rate	2.2 s @ 33Hz	
Open Circuit Detection Time	Within 2s @33Hz	
Conversion Method	Sigma-Delta	
External DC Power Required	None	

** Meets EMC and Safety requirements. See the Declaration of Conformity for details.*
*** Frequencies <123Hz, Display push button may need to be pressed/held >2 seconds.*
† To obtain the most current agency approval information, see the Agency Approval Checklist section on the specific component part number web page.

NOTE: The most recent Productivity Suite software and firmware versions may be required to support new modules and new features.

Removable Terminal Block Specifications		
Part Number	***P2-RTB***	***P2-RTB-1***
Number of positions	18 screw terminals	18 push release terminals
Wire Range	30–16 AWG (0.051–1.31 mm²) Solid/stranded conductor 3/64 in (1.2 mm) insulation max. 1/4 in (6–7 mm) strip length	28–16 AWG (0.081–1.31 mm²) Solid/stranded conductor 3/64 in (1.2 mm) insulation max. 19/64 in (7–8 mm) strip length
Conductors	USE COPPER CONDUCTORS, 75ºC or equivalent.	
Screw Driver Width	0.1 in. (2.5 mm) maximum	NA
Screw Size	M2	N/A
Screw Torque	2.5 lb·in (0.28 N·m)	N/A

** Recommended screw driver: P/N TW-SD-MSL-1.*

Analog Input Modules

P2-08NTC (cont'd)

General Specifications	
Operating Temperature	0º to 60ºC (32º to 140ºF)
Storage Temperature	-20º to 70ºC (-4º to 158ºF)
Humidity	5 to 95% (non-condensing)
Environmental Air	No corrosive gases permitted
Vibration	IEC60068-2-6 (Test Fc)
Shock	IEC60068-2-27 (Test Ea)
Field to Logic Side Isolation	1000VDC
Heat Dissipation	500mW
Enclosure Type	Open equipment
Module Keying to Backplane	Electronic
Module Location	Any I/O slot in a Productivity2000 system
Field Wiring	Removable terminal block (included). The P2-08NTC module is not compatible with the ZIPLink wiring system.
Connector Type (included)	18-position removable terminal block
Weight	136g (4.8 oz)
Agency Approvals**	UL 508 File E139594, Canada & USA CE (EN61131-2*)

**Meets EMC and Safety requirements. See the Declaration of Conformity for details.*
***To obtain the most current agency approval information, see the Agency Approval Checklist section on the specific component part number web page.*

Diagnostics	
Module Diagnostics Failure	1 bit per module
Module Not Ready	1 bit per module
Channel Burn-out (Thermistor only)	1 bit per channel
Channel Under-range (Thermistor only)	1 bit per channel
Channel Over-range	1 bit per channel

NOTE: At module power-up Channel 1 must have a functional Thermistor connected so internal automatic calibration is performed.

Wiring Diagrams

Thermistor Input

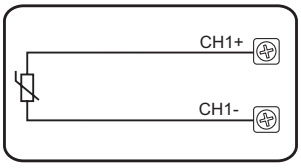

NOTE: Install jumper wire on each unused input. CH1+ to CH1-

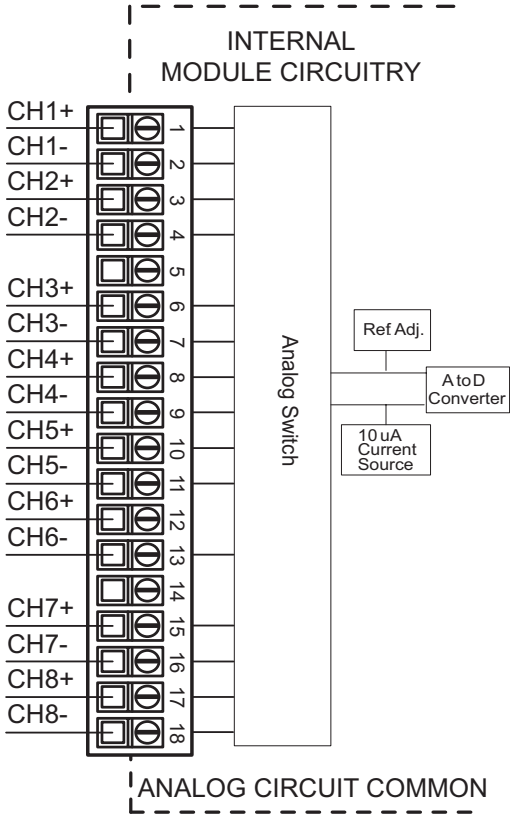

Analog Output Modules

P2-04DA $286.00

Voltage/Current Analog Output
The P2-04DA Voltage/Current Analog Output Module provides four channels of ±10 VDC or 4–20 mA sink/source selectable outputs.

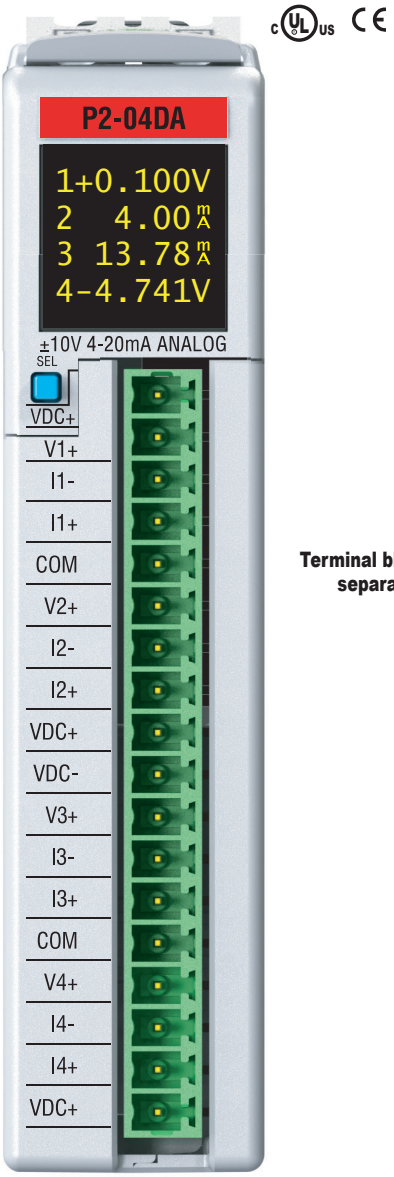

Terminal block sold separately.

Output Specifications	
Output Channels	***4***
Module Signal Output Ranges	1) ±10VDC 2) 4–20mA (sink or source per channel)
Signal Resolution	16-bit
Resolution Value of LSB (least significant bit)	±10V = 305µV/count 4–20mA = 0.244 µA/count 1 LSB = 1 count
Data Range	0 to 65535 counts uni-polar and -32768 to +32767 counts bi-polar
Output Type	Voltage outputs sources/sinking at 10mA max, or Current outputs sink or source at 20mA max.
Output Value in Fault Mode	Voltage outputs 0V or 0mA current outputs
Load Impedance (Minimum External Power Supply)	>1000Ω voltage outputs (19.2–30 VDC) 0–755Ω Sinking, 0–600Ω Sourcing (19.2 VDC) 0–875Ω Sinking, 0–700Ω Sourcing (21.6 VDC) 0–1000Ω Sinking, 0–855Ω Sourcing (24VDC) 0–1110Ω Sinking, 0–970Ω Sourcing (26.4 VDC) 0–1350Ω Sinking, 0–1150Ω Sourcing (30VDC)
Maximum Capacitive Load	0.01 µF maximum voltage outputs
Maximum Inductive Load	1mH maximum current outputs
Allowed Load Type	Grounded
Maximum Inaccuracy (% of range)	0.1% voltage, 0.1% current (including temperature drift)
Maximum Full Scale Calibration Error (not including offset error)	±0.025% of range maximum voltage outputs ±0.025% of range maximum current outputs
Maximum Offset Calibration Error	±0.025% of range maximum
Accuracy vs. Temperature	±25PPM/°C max f.s. calibration change (±0.0025% of range/°C)
Max Crosstalk	-80dB, 6 LSB
Linearity Error (End to End)	±16 LSB maximum (±0.025% of full scale) Monotonic with no missing codes
Output Stability and Repeatability	±10 LSB after 10 minute warm-up (typical)
Output Ripple	0.05% of Full Scale
Output Setting Time	0.3 ms max, 5µs min (full scale change)
All Channel Update Rate	0.6 ms
Maximum Continuous Overload	Voltage Outputs current limited to 35mA typical Current Outputs open circuit protected
Type of Output Protection	15VDC Peak Output Voltage Current outputs current limited to <=20mA
Output Signal (power-up,-down)	0V voltage outputs, 0mA current outputs
External DC Power Required	94mA voltage operation 4 channels 130mA current operation 4 channels 24VDC -20% / +25%

NOTE: The most recent Productivity Suite software and firmware versions may be required to support new modules and new features.

We recommend using prewired ZIPLink cables and connection modules. See Wiring Solutions. If you wish to hand-wire your module, a removable terminal block is sold separately. Order part number P2-RTB or P2-RTB-1.

Analog Output Modules

P2-04DA (cont'd)

General Specifications	
Operating Temperature	0º to 60ºC (32º to 140ºF)
Storage Temperature	-20º to 70ºC (-4º to 158ºF)
Humidity	5 to 95% (non-condensing)
Environmental Air	No corrosive gases permitted
Vibration	IEC60068-2-6 (Test Fc)
Shock	IEC60068-2-27 (Test Ea)
Field to Logic Side Isolation	1800VAC applied for 1 second
Insulation Resistance	>10MΩ @ 500VDC
Heat Dissipation	3.6 W
Enclosure Type	Open equipment
Module Keying to Backplane	Electronic
Module Location	Any I/O slot in a Productivity2000 system
Field Wiring	Use ZIPLink wiring system or removable terminal block (not included). See Wiring Solutions.
Connector Type (Sold separately)	18-position removable terminal block
Weight	90g (3.2 oz)
Agency Approvals*	UL508 File E139594, Canada & USA CE (EN61131-2*)

**Meets EMC and Safety requirements. See the Declaration of Conformity for details.*
***To obtain the most current agency approval information, see the Agency Approval Checklist section on the specific component part number web page.*

Removable Terminal Block Specifications		
Part Number	***P2-RTB***	***P2-RTB-1***
Number of positions	18 screw terminals	18 push release terminals
Wire Range	30–16 AWG (0.051–1.31 mm²) Solid/stranded conductor 3/64 in (1.2 mm) insulation max. 1/4 in (6–7 mm) strip length	28–16 AWG (0.081–1.31 mm²) Solid/stranded conductor 3/64 in (1.2 mm) insulation max. 19/64 in (7–8 mm) strip length
Conductors	USE COPPER CONDUCTORS, 75ºC or equivalent.	
Screw Driver Width	0.1 in. (2.5 mm) maximum	NA
Screw Size	M2	N/A
Screw Torque	2.5 lb·in (0.28 N·m)	N/A

** Recommended screw driver: P/N TW-SD-MSL-1.*

Analog Output Modules

P2-04DA (cont'd)

Wiring Diagrams

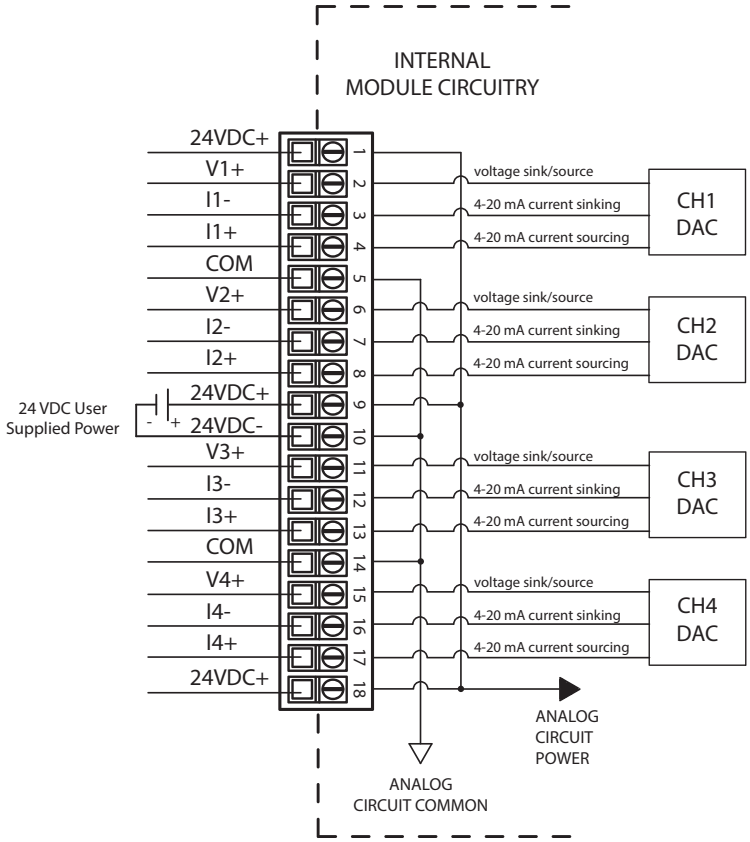

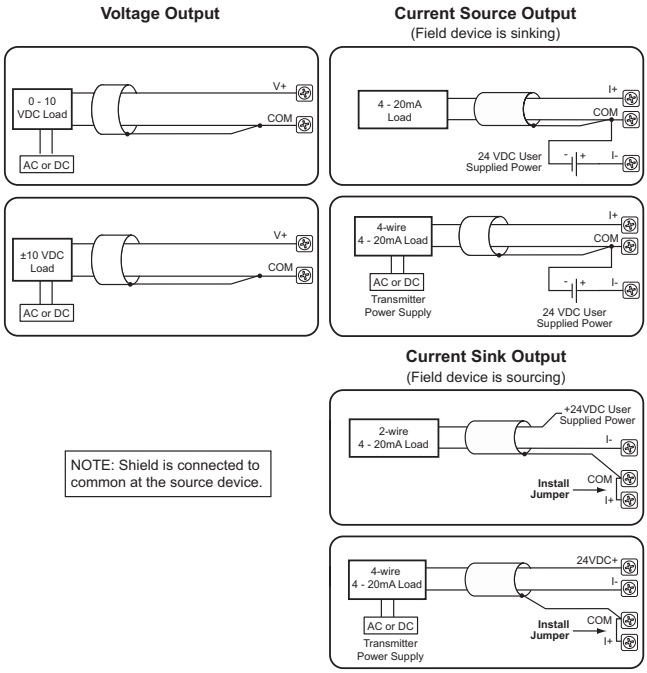

Analog Output Modules

P2-04DA-1 $217.00

Current Analog Output

The P2-04DA-1 Current Analog Output Module provides four channels of 4–20 mA outputs for use with the Productivity2000 system.

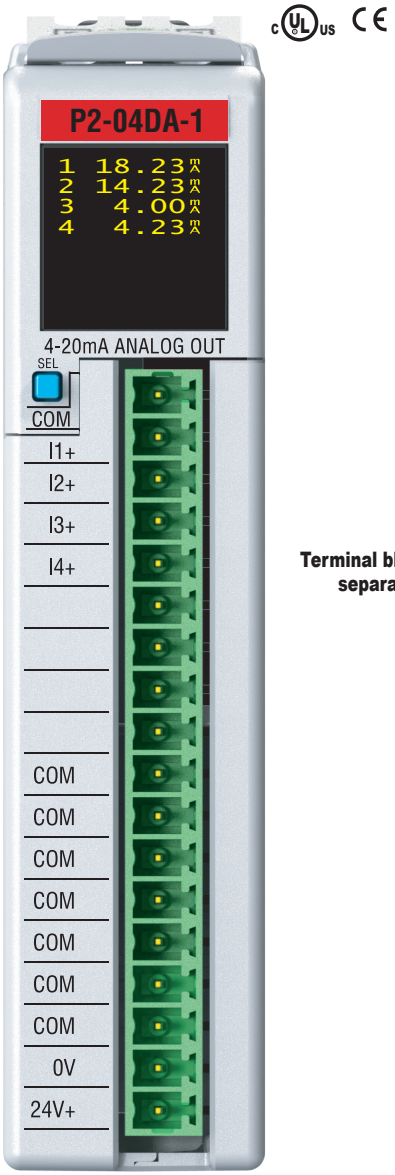

Terminal block sold separately.

NOTE: The most recent Productivity Suite software and firmware versions may be required to support new modules and new features.

We recommend using prewired ZIPLink cables and connection modules. See Wiring Solutions.
If you wish to hand-wire your module, a removable terminal block is sold separately. Order part number P2-RTB or P2-RTB-1.

This module can be used with ZIPLink CONNECTION SYSTEMS

Output Specifications

Output Channels	4
Output Range	4–20mA
Signal Resolution	16-bit
Resolution Value of LSB (least significant bit)	4–20 mA = 0.244 µA/count 1 LSB = 1 count
Data Range	0 to 65535 counts
Output Type (sourcing)	Current: 20mA max.
Output Value in Fault Mode	Near 0mA
Load Impedance (Minimum External Power Supply)	0–570 Ω (19.2 VDC) 0–690Ω (21.6 VDC) 0–810 Ω (24VDC) 0–930 Ω (26.4 VDC) 0–1100 Ω (30VDC) Minimum load 0–125 Ω @ 0–45°C 250–715 Ω @ 0–60°C
Maximum Inductive Load (Current Output)	1mH
Allowed Load Type	Grounded
Maximum Inaccuracy	0.1% of range (counts TBD) (including temperature drift)
Maximum Full Scale Calibration Error (not including offset error)	±0.025% of range maximum
Maximum Offset Calibration Error	±0.025% of range maximum
Accuracy vs. Temperature	±25ppm/°C max full scale, calibration change (±0.0025% of range/°C)
Maximum Crosstalk	-96dB, 1 LSB
Linearity Error (End to End)	±16 LSB maximum (±0.025% of full scale) Monotonic with no missing codes
Output Stability and Repeatability	±10 LSB after 10 minute warm-up (typical)
Output Ripple	0.05% of full scale
Output Setting Time	300µs max, 5µs min (full scale change)
All Channel Update Rate	600µs
Maximum Continuous Overload	Outputs open circuit protected
Type of Output Protection	Electronically current limited to 20mA or less
Output Signal (power-up,-down)	4mA
External Power Supply Required	24VDC @ 120mA(loop power included)

Removable Terminal Block Specifications

Part Number	***P2-RTB***	***P2-RTB-1***
Number of positions	18 screw terminals	18 push release terminals
Wire Range	30–16 AWG (0.051–1.31 mm²) Solid/stranded conductor 3/64 in (1.2 mm) insulation max. 1/4 in (6–7 mm) strip length	28–16 AWG (0.081–1.31 mm²) Solid/stranded conductor 3/64 in (1.2 mm) insulation max. 19/64 in (7–8 mm) strip length
Conductors	USE COPPER CONDUCTORS, 75ºC or equivalent.	
Screw Driver Width	0.1 in. (2.5 mm) maximum	NA
Screw Size	M2	N/A
Screw Torque	2.5 lb·in (0.28 N·m)	N/A

** Recommended screw driver: P/N TW-SD-MSL-1.*

Analog Output Modules

P2-04DA-1 (cont'd)

General Specifications	
Operating Temperature	0ºC–60ºC (32ºF–140ºF)
Storage Temperature	-20ºC–70ºC (-4ºF–158ºF)
Humidity	5 to 95% (non-condensing)
Environmental Air	No corrosive gases permitted
Vibration	IEC60068-2-6 (Test Fc)
Shock	IEC60068-2-27 (Test Ea)
Field to Logic Side Isolation	1800VAC applied for 1s
Insulation Resistance	> 10MΩ @ 500VDC
Heat Dissipation	3100mW
Enclosure Type	Open equipment
Module Keying to Backplane	Electronic
Module Location	Any I/O slot in a Productivity®2000 system
Field Wiring	Use ZIPLink wiring system or removable terminal block (not included). See "Wiring Solutions".
Connector Type (Not included)	18-position removable terminal block
Weight	90g (3.2 oz)
Agency Approvals	UL 61010-1 and UL 61010-2-201 File E139594, Canada and USA CE (EN 61131-2 EMC, EN 61010-1 and EN 61010-2-201 Safety)*

**Meets EMC and Safety requirements. See the D.O.C. for details.*

Wiring Diagrams

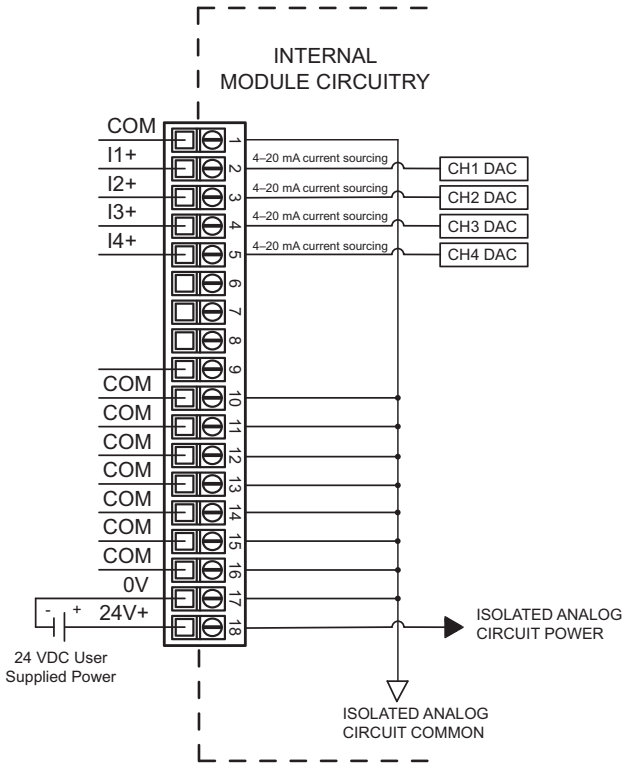

Current Output Circuits

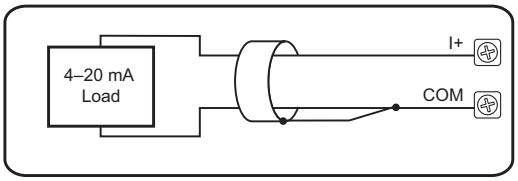

Note: Shield is connected to common at the source of the device.

Analog Output Modules

P2-04DA-2 $212.00

Voltage Analog Output

The P2-04DA-2 Voltage Analog Output Module provides four channels of ±10VDC outputs for use with the Productivity2000 system.

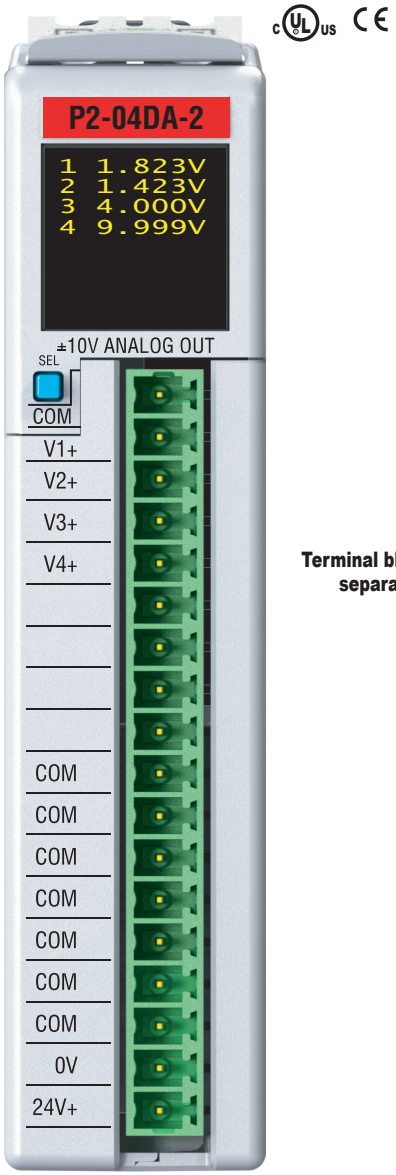

Terminal block sold separately.

NOTE: The most recent Productivity Suite software and firmware versions may be required to support new modules and new features.

We recommend using prewired ZIPLink cables and connection modules. See Wiring Solutions.
If you wish to hand-wire your module, a removable terminal block is sold separately. Order part number P2-RTB or P2-RTB-1.

Output Specifications	
Output Channels	4
Module Signal Output Ranges	±10VDC
Signal Resolution	16-bit
Resolution Value of LSB (least significant bit)	±10V = 305µV/count 1 LSB = 1 count
Data Range	-32768 to +32767 counts
Output Type	Voltage 10mA max
Output Value in Fault Mode	0V
Load Impedance	≥1000Ω
Maximum Capacitive Load (Current Output)	0.01 µF
Maximum Inductive Load	1mH
Allowed Load Type	Grounded
Maximum Inaccuracy	0.1% of range (including temperature drift)
Maximum Full Scale Calibration Error	±0.025% of range maximum
Maximum Offset Calibration Error	±0.025% of range maximum
Accuracy vs. Temperature	±25PPM/°C max full scale, calibration change (±0.0025% of range/°C)
Max Crosstalk	-96dB, 1 LSB
Linearity Error (End to End)	±16 LSB maximum (±0.025% of full scale) Monotonic with no missing codes
Output Stability and Repeatability	±10 LSB after 10 minute warm-up (typical)
Output Ripple	0.05% of full scale
Output Setting Time	300µs max, 5µs min (full scale change)
All Channel Update Rate	1ms
Maximum Continuous Overload	Outputs current limited to 40mA typical Continuous overloads on multiple outputs can damage the module.
Type of Output Protection	0.1 µF transient suppressor
Output Signal (power-up,-down)	0V
External DC Power Required	24VDC (-20% / +25%), 75mA

Removable Terminal Block Specifications		
Part Number	***P2-RTB***	***P2-RTB-1***
Number of positions	18 screw terminals	18 push release terminals
Wire Range	30–16 AWG (0.051–1.31 mm²) Solid/stranded conductor 3/64 in (1.2 mm) insulation max. 1/4 in (6–7 mm) strip length	28–16 AWG (0.081–1.31 mm²) Solid/stranded conductor 3/64 in (1.2 mm) insulation max. 19/64 in (7–8 mm) strip length
Conductors	USE COPPER CONDUCTORS, 75ºC or equivalent.	
Screw Driver Width	0.1 in. (2.5 mm) maximum	NA
Screw Size	M2	N/A
Screw Torque	2.5 lb·in (0.28 N·m)	N/A

** Recommended screw driver: P/N TW-SD-MSL-1.*

Analog Output Modules

P2-04DA-2 (cont'd)

General Specifications	
Operating Temperature	0°C– 60°C (32°F–140°F)
Storage Temperature	-20ºC–70ºC (-4ºF–158ºF)
Humidity	5 to 95% (non-condensing)
Environmental Air	No corrosive gases permitted
Vibration	IEC60068-2-6 (Test Fc)
Shock	IEC60068-2-27 (Test Ea)
Field to Logic Side Isolation	1800VAC applied for 1s
Insulation Resistance	> 10MΩ @ 500VDC
Heat Dissipation	2200mW
Enclosure Type	Open equipment
Module Keying to Backplane	Electronic
Module Location	Any I/O slot in a Productivity®2000 system
Field Wiring	Use ZIPLink wiring system or removable terminal block (not included). See "Wiring Solutions" (https://www.automationdirect.com/adc/shopping/catalog/wiring_solutions).
Connector Type (Not included)	18-position removable terminal block
Weight	90g (3.2 oz)
Agency Approvals	UL 61010-1 and UL 61010-2-201 File E139594, Canada and USA CE (EN 61131-2 EMC, EN 61010-1 and EN 61010-2-201 Safety)*

**Meets EMC and Safety requirements. See the Declaration of Conformity for details.*

Wiring Diagrams

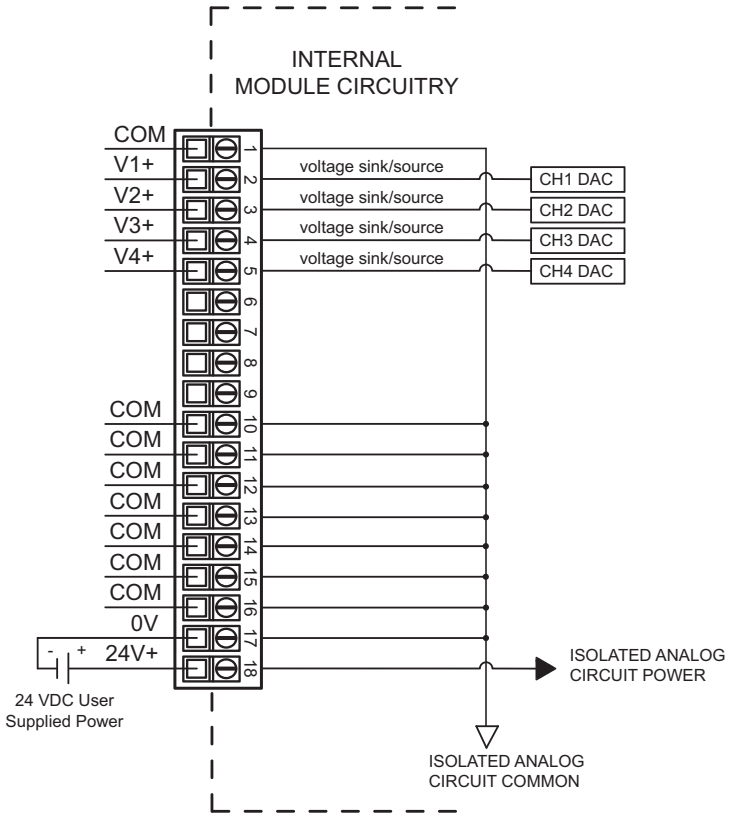

Voltage Output Circuits

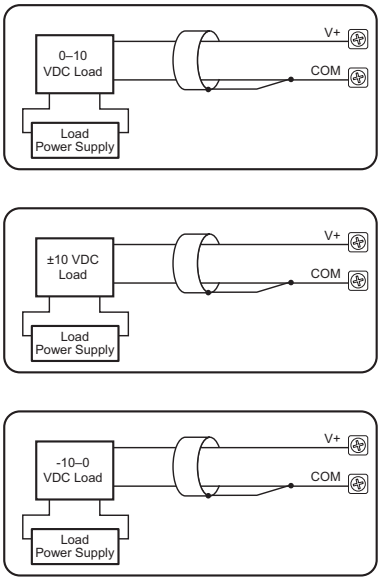

Analog Output Modules

P2-04DAL-1 $162.00

Current Analog Output
The P2-04DAL-1 Low Resolution Current Output Module provides four channels for converting a digital value of 0 to 4095 (12-bit) to 4–20 mA analog signals.

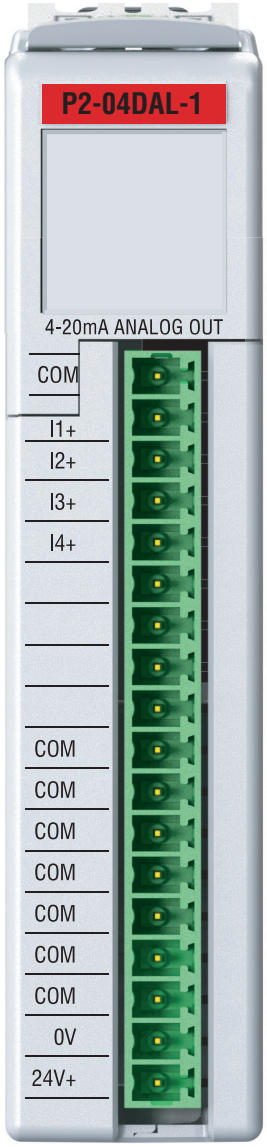

Terminal block sold separately.

Output Specifications	
Output Channels	4
Output Range	4–20 mA
Signal Resolution	12-bit
Resolution Value of LSB (least significant bit)	4–20 mA = 3.9 µA /count 1 LSB = 1 count
Data Range	0 to 4095 counts
Output Type	Current sourcing @ 20mA
Output Value in Fault Mode	Less than 4mA
Load Impedance	0–570 Ω (19.2 VDC), 0-690 Ω (21.6 VDC), 0–810 Ω (24.0 VDC), 0-930 Ω (26.4 VDC), 0–1100 Ω (30.0 VDC) Minimum Load: 0Ω @ 0–45°C 125Ω @ 45–60°C ambient temperature
Maximum Inductive Load	1mH
Allowed Load Type	Grounded
Maximum Inaccuracy	1% of range (Including temperature drift)
Maximum Full Scale Calibration Error, (Including offset)	±0.2% of range minimum
Maximum Offset Calibration Error	±0.2% of range maximum
Accuracy vs. Temperature	±75ppm / °C max full-scale calibration change (±0.005% of range / °C)
Max Crosstalk	-72dB, 1 LSB
Linearity Error (End to End)	±4 LSB maximum (±0.1% of full scale) Monotonic with no missing codes
Output Stability and Repeatability	±2% LSB after 10 minute warm-up (typical)
Output Ripple	0.1% of full scale
Output Setting Time	0.3 ms max, 5µs min (Full-scale change)
All Channel Update Rate	1ms
Maximum Continuous Overload	Electronically current limited to 20mA or less
Type of Output Protection	Outputs open circuit protected.
Output Signal (power-up,-down)	4mA
External DC Power Required	24VDC (-20% / +25%), 120mA (loop power included)

Removable Terminal Block Specifications		
Part Number	***P2-RTB***	***P2-RTB-1***
Number of positions	18 screw terminals	18 push release terminals
Wire Range	30–16 AWG (0.051–1.31 mm²) Solid/stranded conductor 3/64 in (1.2 mm) insulation max. 1/4 in (6–7 mm) strip length	28–16 AWG (0.081–1.31 mm²) Solid/stranded conductor 3/64 in (1.2 mm) insulation max. 19/64 in (7–8 mm) strip length
Conductors	USE COPPER CONDUCTORS, 75ºC or equivalent.	
Screw Driver Width	0.1 in. (2.5 mm) maximum	NA
Screw Size	M2	N/A
Screw Torque	2.5 lb·in (0.28 N·m)	N/A

** Recommended screw driver: P/N TW-SD-MSL-1.*

NOTE: The most recent Productivity Suite software and firmware versions may be required to support new modules and new features.

We recommend using prewired ZIPLink cables and connection modules. See Wiring Solutions.
If you wish to hand-wire your module, a removable terminal block is sold separately. Order part number P2-RTB or P2-RTB-1.

Analog Output Modules

P2-04DAL-1 (cont'd)

General Specifications	
Operating Temperature	0º to 60ºC (32º to 140ºF)
Storage Temperature	-20º to 70ºC (-4º to 158ºF)
Humidity	5 to 95% (non-condensing)
Environmental Air	No corrosive gases permitted
Vibration	IEC60068-2-6 (Test Fc)
Shock	IEC60068-2-27 (Test Ea)
Field to Logic Side Isolation	1800VAC applied for 1 second
Insulation Resistance	> 10MΩ @ 500VDC
Heat Dissipation	6000mW
Enclosure Type	Open equipment
Module Keying to Backplane	Electronic
Module Location	Any I/O slot in a Productivity2000 system
Field Wiring	Removable terminal block (Sold separately). Use optional ZIPLink wiring system or See Wiring Solutions.
Connector Type (Sold separately)	18-position removable terminal block
Weight	95.3 g (3.3 oz)
Agency Approvals*	UL 61010-2-201 File E139594, Canada & USA CE (EMC: EN61131-2*, SAFETY: EN61010-2-201)

**Meets EMC and Safety requirements. See the Declaration of Conformity for details.*
***To obtain the most current agency approval information, see the Agency Approval Checklist section on the specific component part number web page.*

Wiring Diagrams

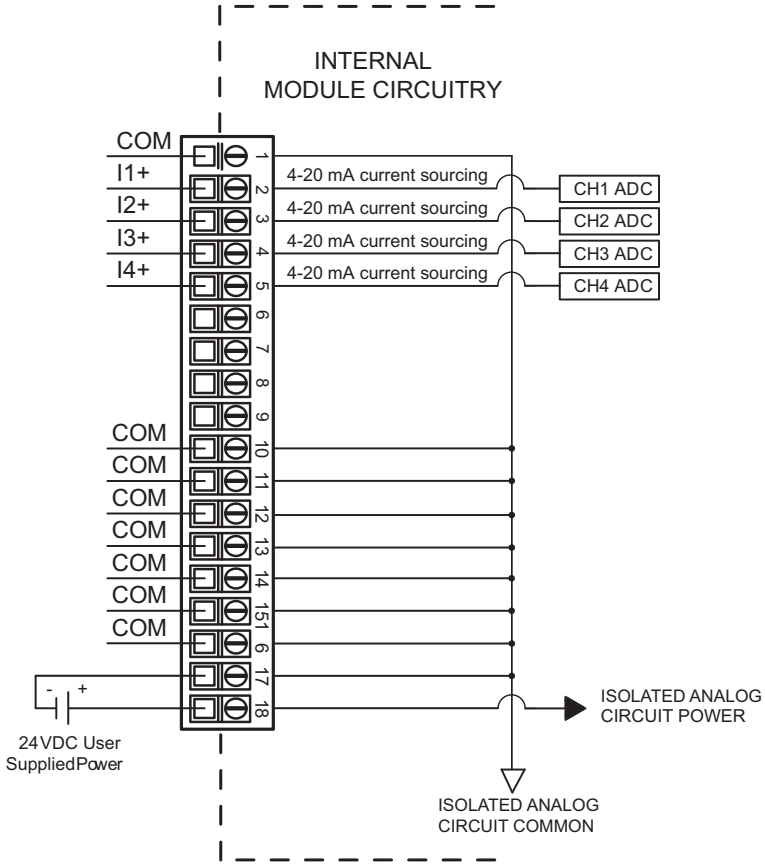

Current Source Output Circuit

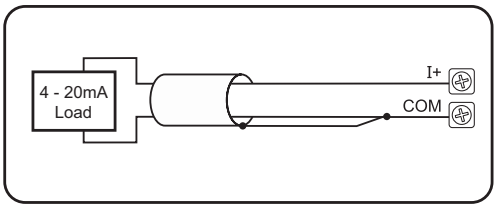

Note: *Shield connected to signal source common.*

Analog Output Modules

P2-04DAL-2 $151.00

Voltage Analog Output
The P2-04DAL-2 Low Resolution Voltage Output Module provides four channels for converting a digital value of 0 to 4095 (12-bit) to 0–10 VDC analog signals.

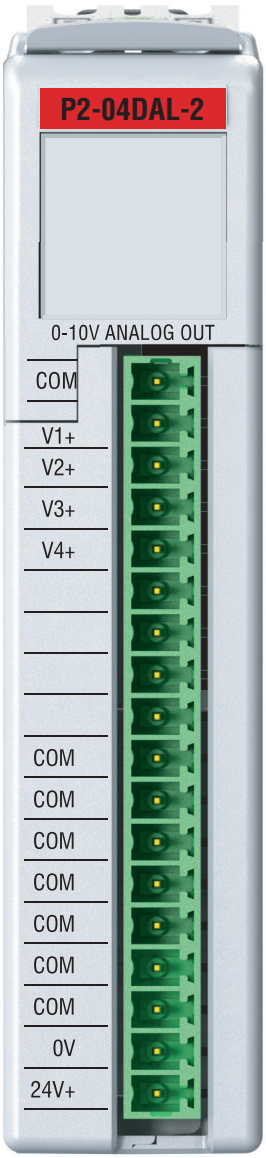

Terminal block sold separately.

Output Specifications	
Output Channels	4
Output Range	0–10 VDC
Signal Resolution	12-bit
Resolution Value of LSB (least significant bit)	0–10 V = 2.44 mV/count 1 LSB = 1 count
Data Range	0 to 4095 counts
Output Type	Voltage sourcing at 10mA
Output Value in Fault Mode	0V
Load Impedance	≥1000Ω
Maximum Inductive Load	0.01 µF
Allowed Load Type	Grounded
Maximum Inaccuracy	0.5% of range (Including temperature drift)
Maximum Full Scale Calibration Error, (Not including offset)	±0.2% of range minimum
Maximum Offset Calibration Error	±0.2% of range maximum
Accuracy vs. Temperature	±75ppm / °C max full-scale calibration change (±0.0025% of range / °C)
Max Crosstalk	-72dB, 1 LSB
Linearity Error (End to End)	±4 LSB maximum (±0.1% of full-scale) Monotonic with no missing codes
Output Stability and Repeatability	±2% LSB after 10 minute warm-up (typical)
Output Ripple	0.1% of full scale
Output Setting Time	0.300 µs max., 5µs min. (full-scale change)
All Channel Update Rate	1ms
Maximum Continuous Overload	Outputs current limited to 40mA, typical. Continuous overloads on multiple outputs can damage the module.
Type of Output Protection	0.1 µF
Output Signal (power-up,-down)	0V
External DC Power Required	24VDC (-20% / +25%), 60mA

NOTE: The most recent Productivity Suite software and firmware versions may be required to support new modules and new features.

Removable Terminal Block Specifications		
Part Number	***P2-RTB***	***P2-RTB-1***
Number of positions	18 screw terminals	18 push release terminals
Wire Range	30–16 AWG (0.051–1.31 mm²) Solid/stranded conductor 3/64 in (1.2 mm) insulation max. 1/4 in (6–7 mm) strip length	28–16 AWG (0.081–1.31 mm²) Solid/stranded conductor 3/64 in (1.2 mm) insulation max. 19/64 in (7–8 mm) strip length
Conductors	USE COPPER CONDUCTORS, 75ºC or equivalent.	
Screw Driver Width	0.1 in. (2.5 mm) maximum	NA
Screw Size	M2	N/A
Screw Torque	2.5 lb·in (0.28 N·m)	N/A

** Recommended screw driver: P/N TW-SD-MSL-1.*

We recommend using prewired ZIPLink cables and connection modules. See Wiring Solutions. If you wish to hand-wire your module, a removable terminal block is sold separately. Order part number P2-RTB or P2-RTB-1.

Analog Output Modules

P2-04DAL-2 (cont'd)

General Specifications	
Operating Temperature	0º to 60ºC (32º to 140ºF)
Storage Temperature	-20º to 70ºC (-4º to 158ºF)
Humidity	5 to 95% (non-condensing)
Environmental Air	No corrosive gases permitted
Vibration	IEC60068-2-6 (Test Fc)
Shock	IEC60068-2-27 (Test Ea)
Field to Logic Side Isolation	1800VAC applied for 1 second
Insulation Resistance	> 10MΩ @ 500VDC
Heat Dissipation	3250mW
Enclosure Type	Open equipment
Module Keying to Backplane	Electronic
Module Location	Any I/O slot in a Productivity2000 system
Field Wiring	Removable terminal block (Sold separately). Use optional ZIPLink wiring system or See Wiring Solutions.
Connector Type (Sold separately)	18-position removable terminal block
Weight	95g (3.4 oz)
Agency Approvals**	UL 61010 File E139594, Canada & USA CE (EMC: EN61131-2*, SAFETY: EN61010-2-201)

**Meets EMC and Safety requirements. See the Declaration of Conformity for details.*
***To obtain the most current agency approval information, see the Agency Approval Checklist section on the specific component part number web page.*

Wiring Diagrams

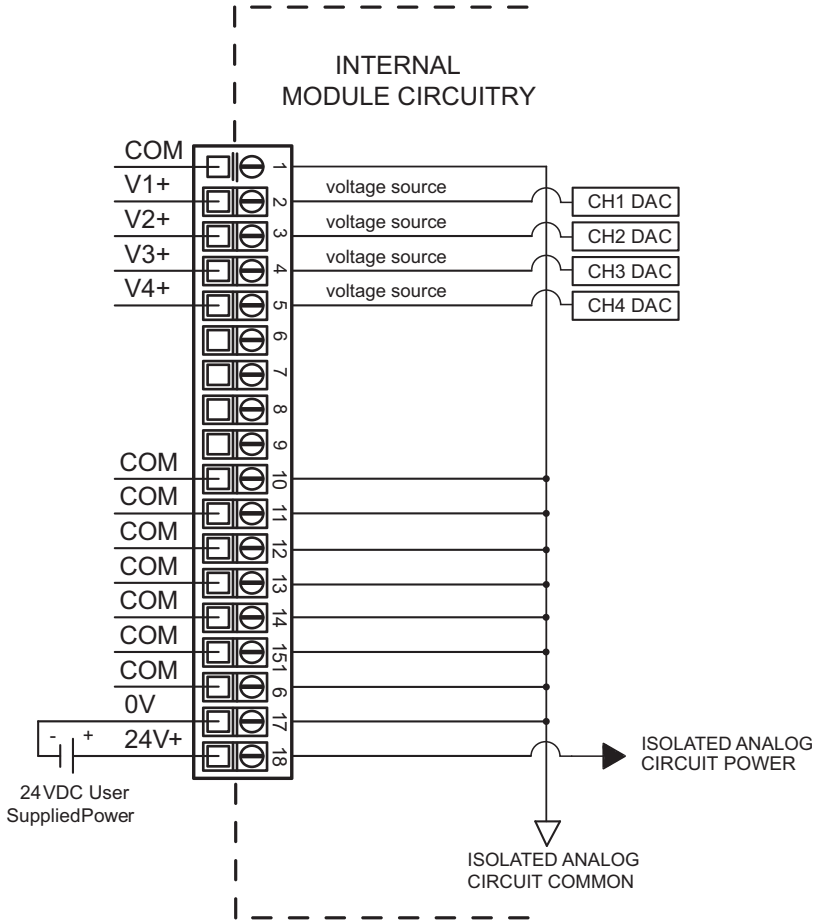

Voltage Output Circuit

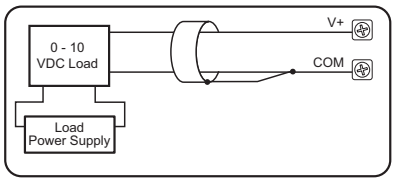

Note: Shield connected to signal source common.

Analog Output Modules

P2-08DA-1 $398.00

Current Analog Output
The P2-08DA-1 Current Analog Output Module provides eight channels of 4 to 20 mA sourcing outputs.

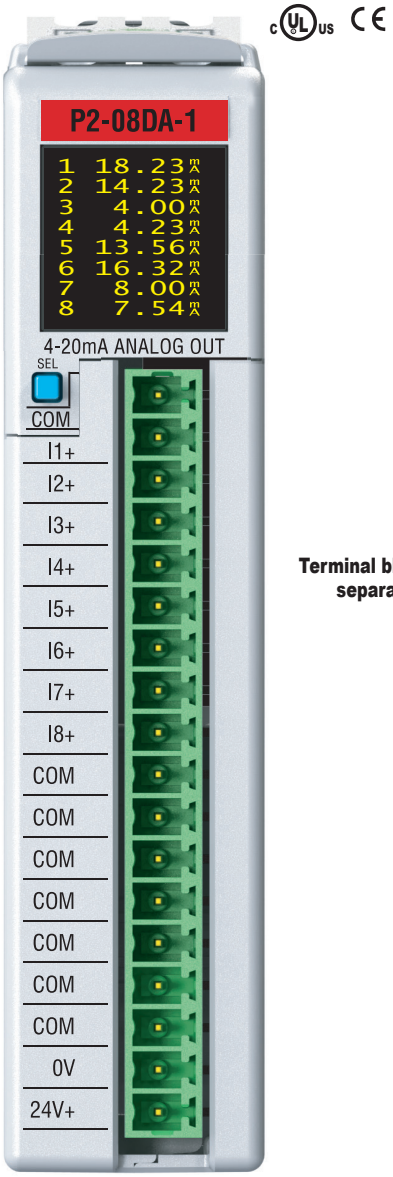

Terminal block sold separately.

Output Specifications	
Output Channels (Commons)	8
Module Signal Output Range	4–20mA
Output Signal Resolution	16-bit
Resolution Value of LSB (least significant bit)	4–20mA = 0.244 µA/count 1 LSB = 1 count
Data Range	0 to 65535 counts
Output Type (sourcing)	Current: 20mA max
Output Value in Fault Mode	Near 0mA
Load Impedance (Minimum External Power Supply)	0–570Ω (19.2 VDC) 0–690Ω (21.6 VDC) 0–810Ω (24VDC) 0–930Ω (26.4 VDC) 0–1100Ω (30VDC) Minimum Load 0–125Ω @ 0–45°C 250–715Ω @ 0–60°C
Maximum Inductive Load	1mH
Allowed Load Type	Grounded
Maximum Inaccuracy	0.1% of range (Counts TBD) (including temperature drift)
Maximum Full Scale Calibration Error (not including offset error)	±0.025% of range maximum
Maximum Offset Calibration Error	±0.025% of range maximum
Accuracy vs. Temperature	±25PPM/°C max full scale calibration change (±0.0025% of range/°C)
Max Crosstalk	-96dB, 1 LSB
Linearity Error (End to End)	±16 LSB maximum (±0.025% of full scale) Monotonic with no missing codes
Output Stability and Repeatability	±10 count after 10 minute warm-up (typical)
Output Ripple	0.05% of full scale
Output Setting Time	300µs max, 5µs min (full scale change)
All Channel Update Rate	600µs
Maximum Continuous Overload	Outputs open circuit protected
Type of Output Protection	Electronically current limited to 20mA or less
Output Signal (power-up,-down)	4mA
External DC Power Required	24VDC @ 220mA (Loop Power Included)

We recommend using prewired ZIPLink cables and connection modules. See Wiring Solutions.
If you wish to hand-wire your module, a removable terminal block is sold separately. Order part number P2-RTB or P2-RTB-1.

Removable Terminal Block Specifications		
Part Number	***P2-RTB***	***P2-RTB-1***
Number of positions	18 screw terminals	18 push release terminals
Wire Range	30–16 AWG (0.051–1.31 mm²) Solid/stranded conductor 3/64 in (1.2 mm) insulation max. 1/4 in (6–7 mm) strip length	28–16 AWG (0.081–1.31 mm²) Solid/stranded conductor 3/64 in (1.2 mm) insulation max. 19/64 in (7–8 mm) strip length
Conductors	USE COPPER CONDUCTORS, 75ºC or equivalent.	
Screw Driver Width	0.1 in. (2.5 mm) maximum	NA
Screw Size	M2	N/A
Screw Torque	2.5 lb·in (0.28 N·m)	N/A

** Recommended screw driver: P/N TW-SD-MSL-1.*

Analog Output Modules

P2-08DA-1 (cont'd)

General Specifications	
Operating Temperature	0º to 60ºC (32º to 140ºF)
Storage Temperature	-20º to 70ºC (-4º to 158ºF)
Humidity	5 to 95% (non-condensing)
Environmental Air	No corrosive gases permitted
Vibration	IEC60068-2-6 (Test Fc)
Shock	IEC60068-2-27 (Test Ea)
Field to Logic Side Isolation	1800VAC applied for 1 second
Insulation Resistance	>10MΩ @ 500VDC
Heat Dissipation	700mW
Enclosure Type	Open equipment
Module Keying to Backplane	Electronic
Module Location	Any I/O slot in a Productivity®2000 system
Field Wiring	Use ZIPLink wiring system or removable terminal block (not included). See Wiring Solutions.
Connector Type (Sold separately)	18-position removable terminal block
Weight	90g (3.2 oz)
Agency Approvals*	UL508 File E139594, Canada & USA CE (EN61131-2*)

**Meets EMC and Safety requirements. See the Declaration of Conformity for details.*
***To obtain the most current agency approval information, see the Agency Approval Checklist section on the specific component part number web page.*

Wiring Diagrams

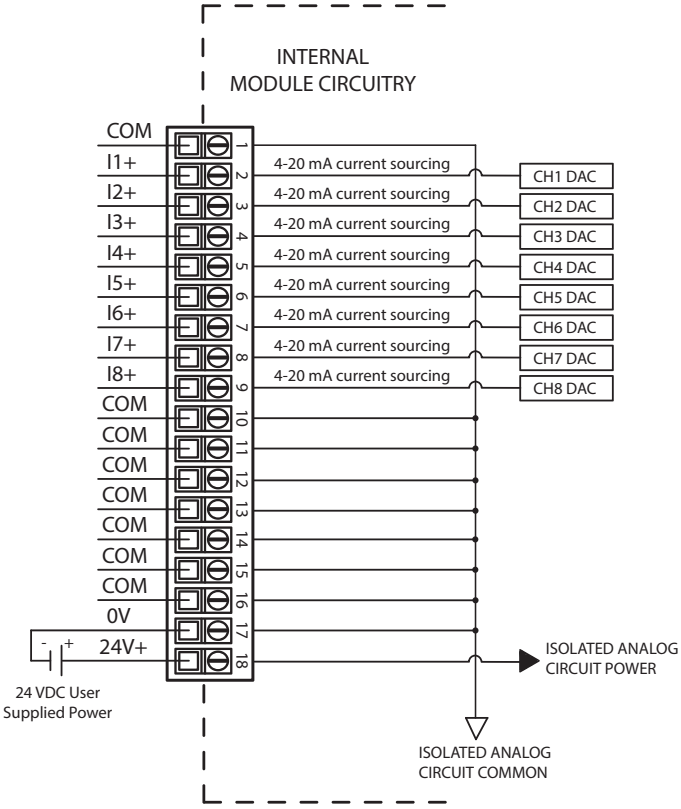

Current Source Output Circuit

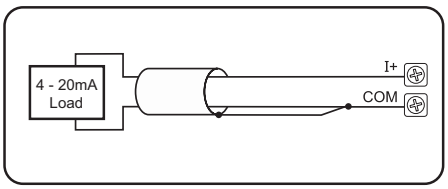

Analog Output Modules

P2-08DA-2 $365.00

Voltage Analog Output
The P2-08DA-2 Voltage Analog Output Module provides eight channels of ±10 VDC outputs.

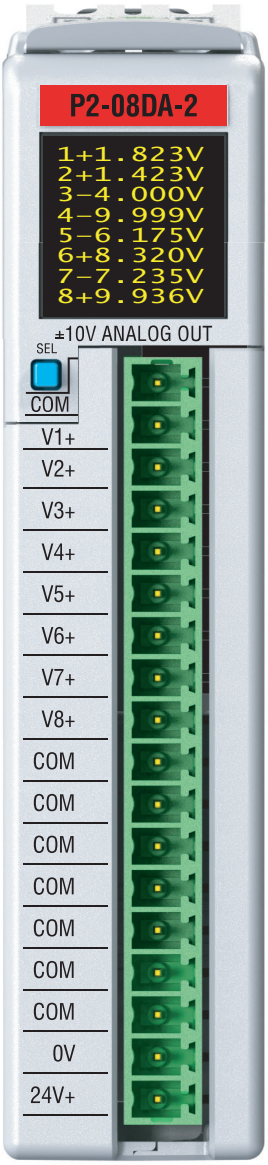

Terminal block sold separately.

Output Specifications	
Output Channels (Commons)	8
Module Signal Output Range	±10VDC
Output Signal Resolution	16-bit
Resolution Value of LSB (least significant bit)	±10V = 305µV/count 1 LSB = 1 count
Data Range	-32768 to +32767 counts
Output Type (sourcing/sinking)	Voltage: 10mA max
Output Value in Fault Mode	0V
Load Impedance	≤1000Ω
Maximum Capacitive Load	0.01 µF
Allowed Load Type	Grounded
Maximum Inaccuracy	0.1% of range (including temperature drift)
Maximum Full Scale Calibration Error (not including offset error)	±0.025% of range maximum
Maximum Offset Calibration Error	±0.025% of range maximum
Accuracy vs. Temperature	±25PPM/°C max full scale calibration change (±0.0025% of range/°C)
Max Crosstalk	-96dB, 1 LSB
Linearity Error (End to End)	±16 LSB maximum (±0.025% of full scale) Monotonic with no missing codes
Output Stability and Repeatability	±10 LSB after 10 minute warm-up (typical)
Output Ripple	0.05% of full scale
Output Setting Time	300µs max, 5µs min (full scale change)
All Channel Update Rate	1ms
Maximum Continuous Overload	Outputs current limited to 40mA typical Continous overloads on multiple outputs can damage the module.
Type of Output Protection	0.1 µF Transient Suppressor
Output Signal (power-up,-down)	0V
External DC Power Required	24VDC @ 150mA

Removable Terminal Block Specifications		
Part Number	***P2-RTB***	***P2-RTB-1***
Number of positions	18 screw terminals	18 push release terminals
Wire Range	30–16 AWG (0.051–1.31 mm²) Solid/stranded conductor 3/64 in (1.2 mm) insulation max. 1/4 in (6–7 mm) strip length	28–16 AWG (0.081–1.31 mm²) Solid/stranded conductor 3/64 in (1.2 mm) insulation max. 19/64 in (7–8 mm) strip length
Conductors	USE COPPER CONDUCTORS, 75ºC or equivalent.	
Screw Driver Width	0.1 in. (2.5 mm) maximum	NA
Screw Size	M2	N/A
Screw Torque	2.5 lb·in (0.28 N·m)	N/A

** Recommended screw driver: P/N TW-SD-MSL-1.*

We recommend using prewired ZIPLink cables and connection modules. See Wiring Solutions. If you wish to hand-wire your module, a removable terminal block is sold separately. Order part number P2-RTB or P2-RTB-1.

Analog Output Modules

P2-08DA-2 (cont'd)

General Specifications	
Operating Temperature	0º to 60ºC (32º to 140ºF)
Storage Temperature	-20º to 70ºC (-4º to 158ºF)
Humidity	5 to 95% (non-condensing)
Environmental Air	No corrosive gases permitted
Vibration	IEC60068-2-6 (Test Fc)
Shock	IEC60068-2-27 (Test Ea)
Field to Logic Side Isolation	1800VAC applied for 1 second
Insulation Resistance	>10MΩ @ 500VDC
Heat Dissipation	150mW
Enclosure Type	Open equipment
Module Keying to Backplane	Electronic
Module Location	Any I/O slot in a Productivity2000 system
Field Wiring	Use ZIPLink wiring system or removable terminal block (not included). See Wiring Solutions.
Connector Type (Sold separately)	18-position removable terminal block
Weight	90g (3.2 oz)
Agency Approvals**	UL508 File E139594, Canada & USA CE (EN61131-2*)

**Meets EMC and Safety requirements. See the Declaration of Conformity for details.*
***To obtain the most current agency approval information, see the Agency Approval Checklist section on the specific component part number web page.*

Wiring Diagrams

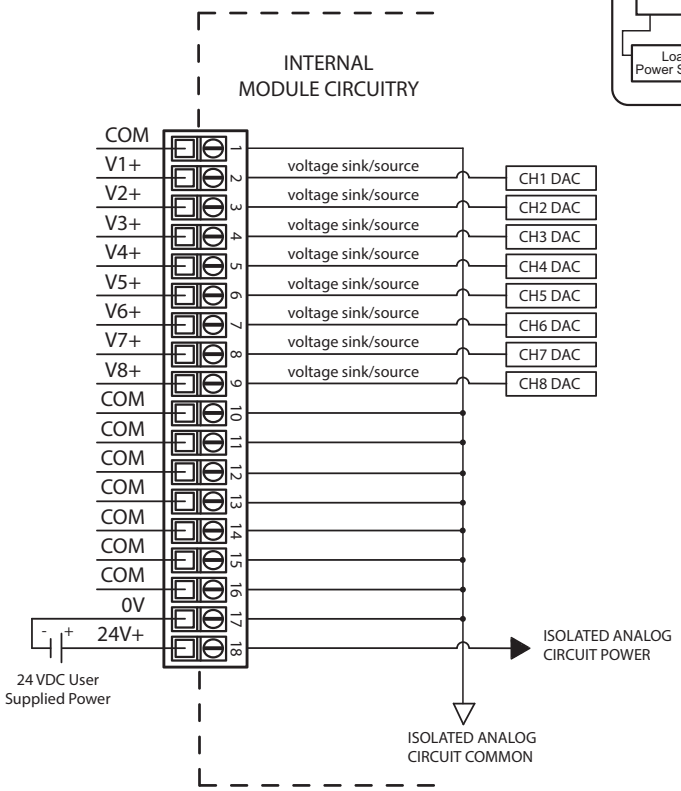

Voltage Output Circuits

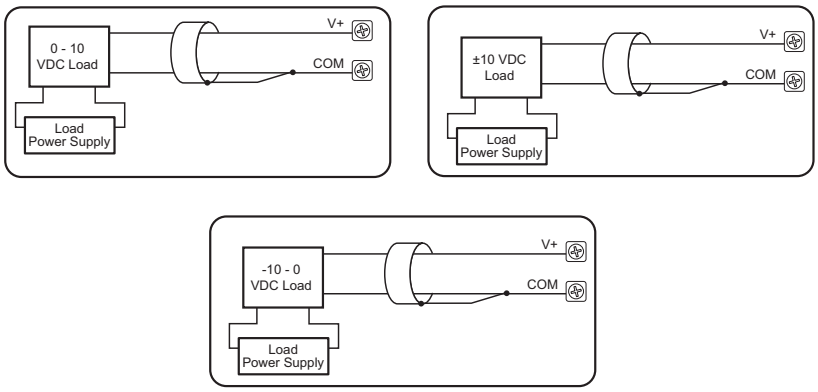

Analog Output Modules

P2-08DAL-1 $297.00

Current Analog Output
The P2-08DAL-1 Low Resolution Current Analog Output Module provides eight channels of 4–20 mA outputs.

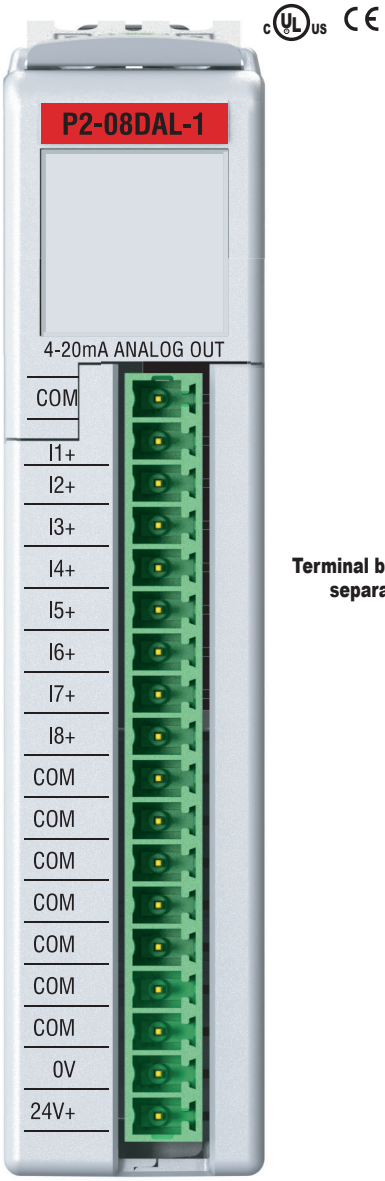

Terminal block sold separately.

Output Specifications	
Output Channels	8
Module Signal Output Range	4–20mA
Signal Resolution	12-bit
Resolution Value of LSB (least significant bit)	4–20mA = 3.9 µA / count 1 LSB = 1 count
Data Range	0 to 4095 counts
Output Type (sourcing)	Current sourcing at 20mA max
Output Value in Fault Mode	Less than 4mA
Load Impedance	0–570Ω (19.2 VDC) 0–690Ω (21.6 VDC) 0–810Ω (24VDC) 0–930Ω (26.4 VDC) 0–1100Ω (30VDC) Minimum Load: 0Ω @ 0–45°C 125Ω @ 45-60°C ambient temperature
Maximum Inductive Load	1mH
Allowed Load Type	Grounded
Maximum Inaccuracy	1% of range (including temperature drift)
Maximum Full Scale Calibration Error (Including Offset)	±0.2% of range minimum
Maximum Offset Calibration Error	±0.2% of range maximum
Accuracy vs. Temperature	±75PPM / °C maximum full-scale calibration change (±0.005% of range / °C)
Max Crosstalk at DC, 50/60Hz	-72dB, 1 LSB
Linearity Error (End to End)	±4 LSB max., (±0.1% of full scale)
Output Stability and Repeatability	±2 count after 10 min. warm up (typical)
Output Ripple	±0.1% of full scale
Output Settling Time	0.3 ms max., 5µ min. (full scale range)
All Channel Update Rate	1ms
Maximum Continuous Overload	Outputs open circuit protected
Type of Output Protection	Electronically current limited to 20mA or less
Output Signal at Power Up and Power Down	4mA
External DC Power Required	24VDC @ 220mA (Loop Power Included)

Removable Terminal Block Specifications		
Part Number	***P2-RTB***	***P2-RTB-1***
Number of positions	18 screw terminals	18 push release terminals
Wire Range	30–16 AWG (0.051–1.31 mm²) Solid/stranded conductor 3/64 in (1.2 mm) insulation max. 1/4 in (6–7 mm) strip length	28–16 AWG (0.081–1.31 mm²) Solid/stranded conductor 3/64 in (1.2 mm) insulation max. 19/64 in (7–8 mm) strip length
Conductors	USE COPPER CONDUCTORS, 75ºC or equivalent.	
Screw Driver Width	0.1 in. (2.5 mm) maximum	NA
Screw Size	M2	N/A
Screw Torque	2.5 lb·in (0.28 N·m)	N/A

** Recommended screw driver: P/N TW-SD-MSL-1*

We recommend using prewired ZIPLink cables and connection modules. See Wiring Solutions. If you wish to hand-wire your module, a removable terminal block is sold separately. Order part number P2-RTB or P2-RTB-1.

NOTE: The most recent Productivity Suite software and firmware versions may be required to support new modules and new features.

Analog Output Modules

P2-08DAL-1 (cont'd)

General Specifications	
Operating Temperature	0º to 60ºC (32º to 140ºF)
Storage Temperature	-20º to 70ºC (-4º to 158ºF)
Humidity	5 to 95% (non-condensing)
Environmental Air	No corrosive gases permitted
Vibration	IEC60068-2-6 (Test Fc)
Shock	IEC60068-2-27 (Test Ea)
Field to Logic Side Isolation	1800VAC applied for 1 second
Insulation Resistance	>10MΩ @ 500VDC
Heat Dissipation	6000mW Maximum (Loop Power Included)
Enclosure Type	Open equipment
Module Keying to Backplane	Electronic
Module Location	Any I/O slot in a Productivity2000 system
Field Wiring	Use ZIPLink wiring system or removable terminal block (not included). See Wiring Solutions.
Terminal Type (not included)	18-position Removable Terminal Block
Weight	90g (3.2 oz)
Agency Approvals**	UL508 File E139594, Canada & USA CE (EN61131-2*)

**Meets EMC and Safety requirements. See the Declaration of Conformity for details.*
***To obtain the most current agency approval information, see the Agency Approval Checklist section on the specific component part number web page.*

Wiring Diagrams

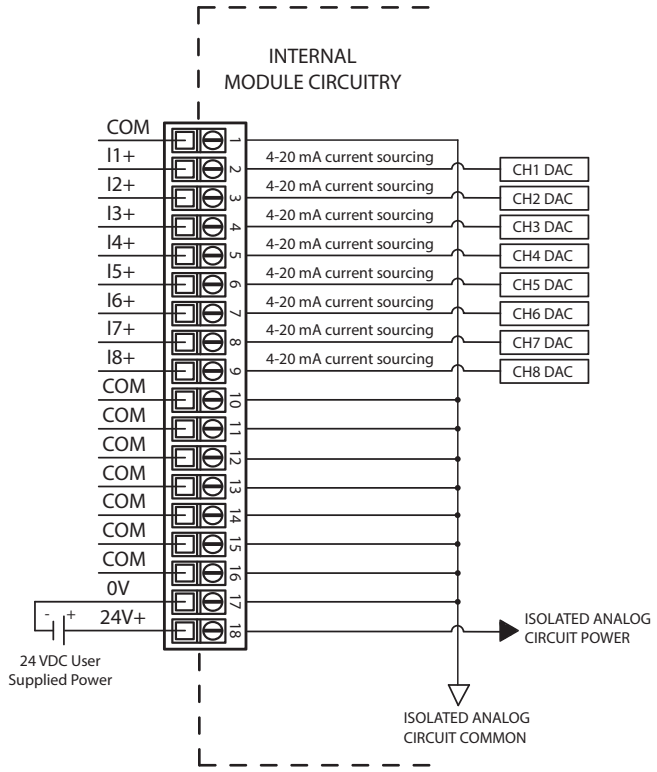

Current Source Output Circuit

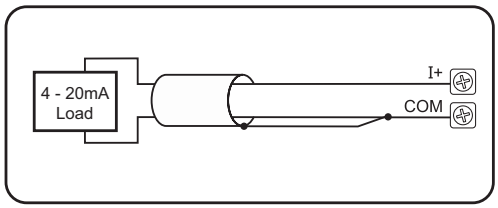

Note: Shield is connected to common at the source device.

Analog Output Modules

P2-08DAL-2 $288.00

Voltage Analog Output
The P2-08DAL-2 Low Resolution Voltage Analog Output Module provides eight channels of 0–10 VDC output signals.

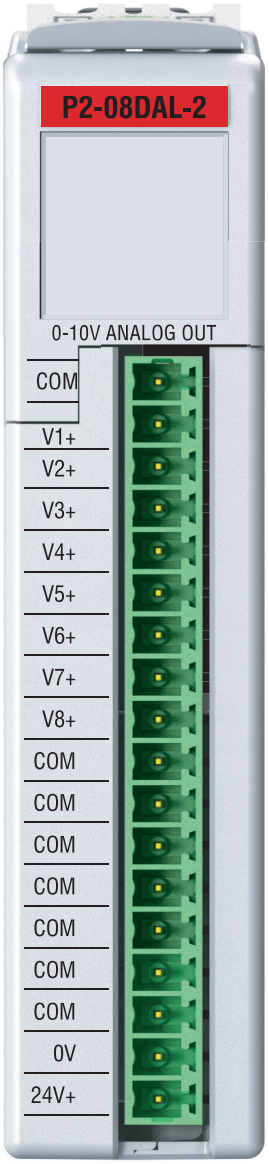

Terminal block sold separately.

NOTE: The most recent Productivity Suite software and firmware versions may be required to support new modules and new features.

We recommend using prewired ZIPLink cables and connection modules. See Wiring Solutions. If you wish to hand-wire your module, a removable terminal block is sold separately. Order part number P2-RTB or P2-RTB-1.

This module can be used with ZIPLink CONNECTION SYSTEMS

Output Specifications

Output Channels	8
Module Signal Input Range	0–10 VDC
Output Signal Resolution	12-bit
Resolution Value of LSB (least significant bit)	0–10V = 2.44 mV per count 1 LSB = 1 count
Data Range	0 to 4095 counts
Output Type (Sinking/Sourcing)	Voltage: 10mA max
Output Value in Fault Mode	0V
Load Impedance	≥1000Ω
Maximum Capacitive Load	0.01 µF
Allowed Load Type	Grounded
Maximum Inaccuracy	0.5% of range (including temperature drift)
Maximum Full Scale Calibration Error (Not Including Offset)	±0.2% of range maximum
Maximum Offset Calibration Error	±0.2% of range maximum
Accuracy vs. Temperature	±75 PPM / °C maximum full-scale calibration change (±0.0025% of range / °C)
Max Crosstalk	-72dB, 1 LSB
Linearity Error (End to End)	±4 LSB maximum, (±0.1% of full scale) Monotonic with no missing codes
Output Stability and Repeatability	±2% LSB after 10 min. warm up (typical)
Output Ripple	±0.1% of full scale
Output Settling Time	300µs max., 5µ min. (full scale range)
All Channel Update Rate (typical)	1ms
Maximum Continuous Overload	Outputs current limited to 40mA typical Continuous overloads on multiple outputs can damage the module.
Type of Output Protection	0.1 µF Transient Suppressor
Output Signal at Power Up and Power Down	0V
External 24VDC Power Required	24VDC (-20% / +25%), 150mA

Removable Terminal Block Specifications

Part Number	***P2-RTB***	***P2-RTB-1***
Number of positions	18 screw terminals	18 push release terminals
Wire Range	30–16 AWG (0.051–1.31 mm²) Solid/stranded conductor 3/64 in (1.2 mm) insulation max. 1/4 in (6–7 mm) strip length	28–16 AWG (0.081–1.31 mm²) Solid/stranded conductor 3/64 in (1.2 mm) insulation max. 19/64 in (7–8 mm) strip length
Conductors	USE COPPER CONDUCTORS, 75ºC or equivalent.	
Screw Driver Width	0.1 in. (2.5 mm) maximum	NA
Screw Size	M2	N/A
Screw Torque	2.5 lb·in (0.28 N·m)	N/A

** Recommended screw driver: P/N TW-SD-MSL-1.*

Analog Output Modules

P2-08DAL-2 (cont'd)

General Specifications	
Operating Temperature	0º to 60ºC (32º to 140ºF)
Storage Temperature	-20º to 70ºC (-4º to 158ºF)
Humidity	5 to 95% (non-condensing)
Environmental Air	No corrosive gases permitted
Vibration	IEC60068-2-6 (Test Fc)
Shock	IEC60068-2-27 (Test Ea)
Field to Logic Side Isolation	1800VAC applied for 1 second
Insulation Resistance	>10MΩ @ 500VDC
Heat Dissipation	3250mW
Enclosure Type	Open equipment
Module Keying to Backplane	Electronic
Module Location	Any I/O slot in a Productivity2000 system
Field Wiring	Use ZIPLink wiring system or removable terminal block (not included). See Wiring Solutions.
Connector Type (Sold separately)	18-position removable terminal block
Weight	90g (3.2 oz)
Agency Approvals	UL508 File E139594, Canada & USA CE (EN61131-2*)

**Meets EMC and Safety requirements. See the Declaration of Conformity for details.*
***To obtain the most current agency approval information, see the Agency Approval Checklist section on the specific component part number web page.*

Wiring Diagrams

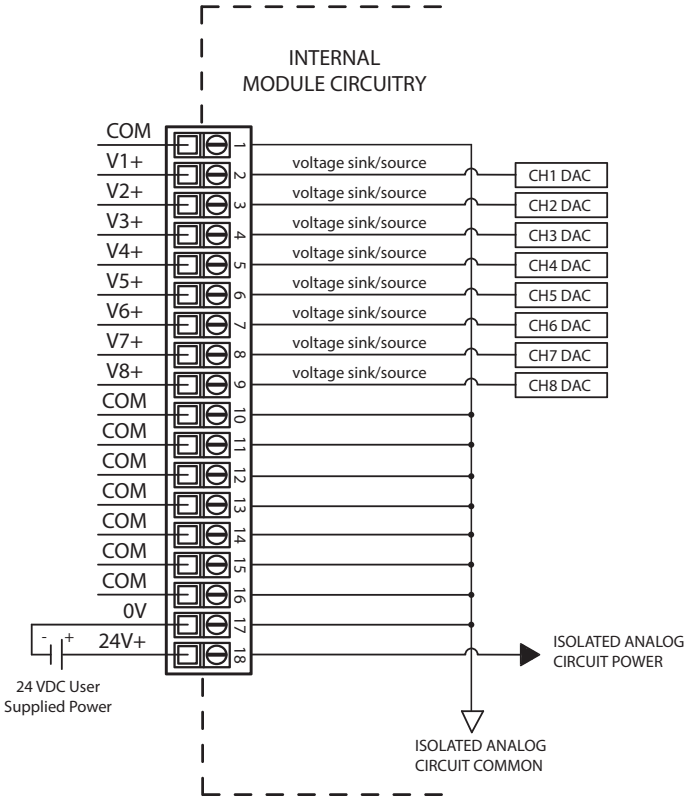

Voltage Output Circuits

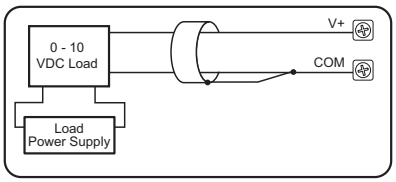

Analog Output Modules

P2-16DA-1 $521.00

Current Analog Output
The P2-16DA-1 Current Analog Output Module provides sixteen channels of 4–20 mA sourcing outputs.

No terminal block sold for this module; ZIPLink required.

Output Specifications	
Output Channels	16
Module Signal Output Range	4–20mA (Sourcing)
Output Signal Resolution	16-bit
Resolution Value of LSB (least significant bit)	4–20mA = 0.244 µA/count 1 LSB = 1 count
Data Range	0 to 65535 counts
Output Type (sourcing)	Current: 20mA max
Output Value in Fault Mode	Near 0mA
Load Impedance (Minimum External Power Supply)	0–570Ω (19.2 VDC) 0–690Ω (21.6 VDC) 0–810Ω (24VDC) 0–930Ω (26.4 VDC) 0–1100Ω (30VDC) Minimum Load 0Ω @ 0–45°C 125Ω @ 45–60°C
Maximum Inductive Load	1mH
Allowed Load Type	Grounded
Maximum Inaccuracy	0.1% of range (including temperature drift)
Maximum Full Scale Calibration Error (not including offset error)	±0.025% of range maximum
Maximum Offset Calibration Error	±0.025% of range maximum
Accuracy vs. Temperature	±25PPM/°C max full scale calibration change (±0.0025% of range/°C)
Max Crosstalk	-96dB, 1 LSB
Linearity Error (End to End)	±16 LSB maximum (±0.025% of full scale) Monotonic with no missing codes
Output Stability and Repeatability	±10 count after 10 minute warm-up (typical)
Output Ripple	0.05% of full scale
Output Setting Time	300µs max, 5µs min (full scale change)
All Channel Update Rate	3ms
Maximum Continuous Overload	Outputs open circuit protected
Type of Output Protection	Electronically current limited to 20mA or less
Output Signal (power-up,-down)	4mA
External DC Power Required	24VDC @ 410mA (includes loop power)

Connector Specifications	
Connector Type	24-Pin Molex Style 43025-2400
Number of Pins	24
Pin Spacing	3x3 mm (0.118 x 0.118 in)

We recommend using pre-wired ZIPLink cables and connection modules. See Wiring Solutions. Module connector type is a 24-pin Molex Style 43025-2400.

Analog Output Modules

P2-16DA-1 (cont'd)

General Specifications	
Operating Temperature	0º to 60ºC (32º to 140ºF)
Storage Temperature	-20º to 70ºC (-4º to 158ºF)
Humidity	5 to 95% (non-condensing)
Environmental Air	No corrosive gases permitted
Vibration	IEC60068-2-6 (Test Fc)
Shock	IEC60068-2-27 (Test Ea)
Field to Logic Side Isolation	1800VAC applied for 1 second
Insulation Resistance	>10MΩ @ 500VDC
Heat Dissipation	96mW
Enclosure Type	Open equipment
Module Keying to Backplane	Electronic
Module Location	Any I/O slot in a Productivity2000 system
Field Wiring	Use ZIPLink wiring system ONLY. See Wiring Solutions. Must use copper conductors 75ºC or equivalent.
Connector Type	24-Pin Molex Style 43025-2400
Weight	90g (3.2 oz)
Agency Approvals*	UL508 File E139594, Canada & USA CE (EN61131-2*)

**Meets EMC and Safety requirements. See the Declaration of Conformity for details.*
***To obtain the most current agency approval information, see the Agency Approval Checklist section on the specific component part number web page.*

Wiring Diagrams

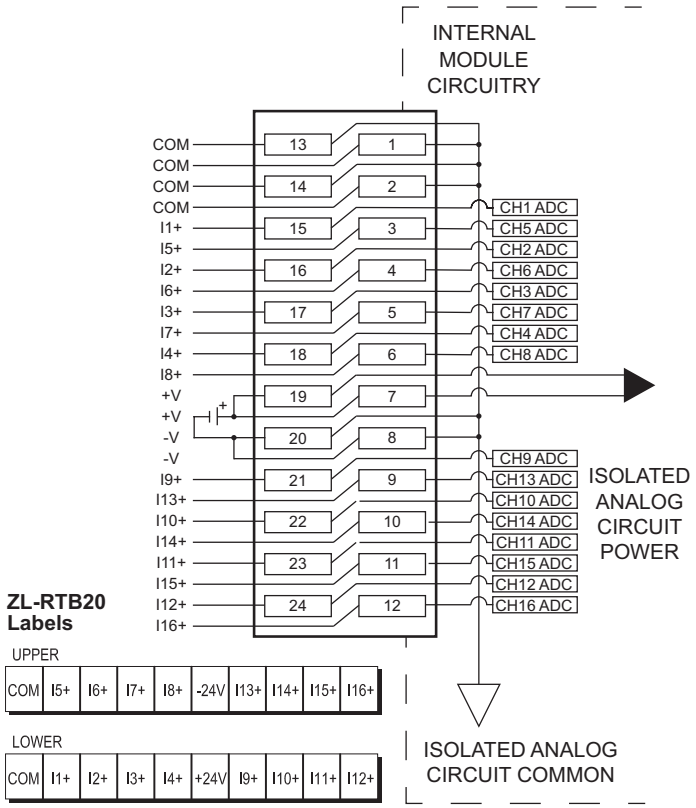

Current Sourcing Output Circuit

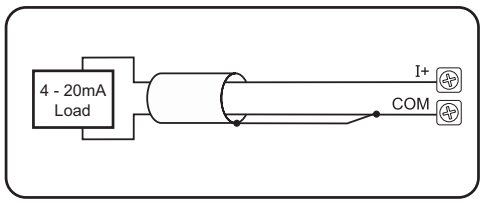

Note: Shield is connected to common at the source device.

Analog Output Modules

P2-16DA-2 $499.00

Voltage Analog Output
The P2-16DA-2 Voltage Analog Output Module provides sixteen channels of ±10 VDC outputs.

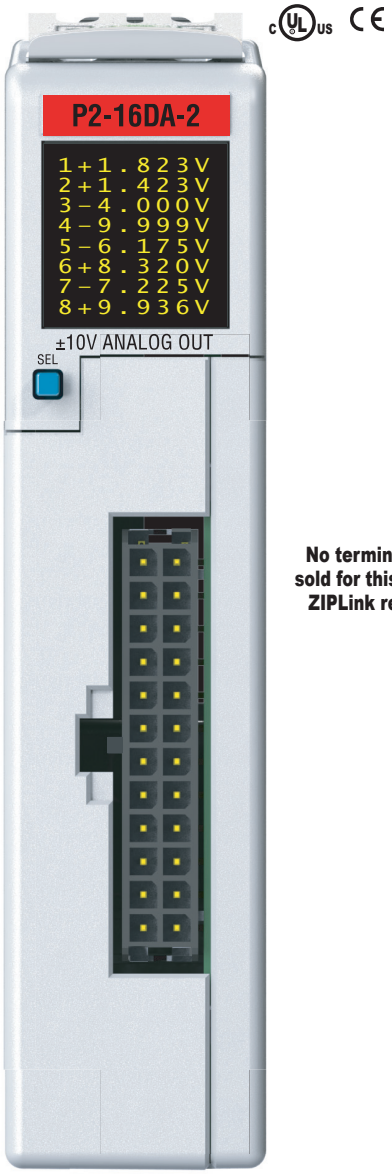

No terminal block sold for this module; ZIPLink required.

We recommend using pre-wired ZIPLink cables and connection modules. See Wiring Solutions. Module connector type is a 24-pin Molex Style 43025-2400.

Output Specifications	
Output Channels	16
Module Signal Output Range	±10VDC
Output Signal Resolution	16-bit
Resolution Value of LSB (least significant bit)	±10VDC = 305µV/count 1 LSB = 1 count
Data Range	-32768 to 32767 counts
Output Type (sourcing/sinking)	Voltage: 10mA max current
Output Value in Fault Mode	0V
Load Impedance	≥1000Ω
Maximum Capacitive Load	0.01 µF maximum
Allowed Load Type	Grounded
Maximum Inaccuracy	0.1% of range (including temperature drift)
Maximum Full Scale Calibration Error (not including offset error)	±0.025% of range maximum
Maximum Offset Calibration Error	±0.025% of range maximum
Accuracy vs. Temperature	±25PPM/°C max full scale calibration change (±0.0025% of range/°C)
Max Crosstalk	-96dB, 1 LSB
Linearity Error (End to End)	±16 LSB maximum (±0.025% of full scale) Monotonic with no missing codes
Output Stability and Repeatability	±10 LSB after 10 minute warm-up (typical)
Output Ripple	0.05% of full scale
Output Setting Time	300µs max, 5µs min (full scale change)
All Channel Update Rate	3ms
Maximum Continuous Overload	Outputs current limited to 40mA typical. Continuous overloads on multiple output can damage the module.
Type of Output Protection	0.1 µF Transient Suppressor
External DC Power Required	24VDC (-20% / +25%), 265mA

General Specifications	
Operating Temperature	0º to 60ºC (32º to 140ºF)
Storage Temperature	-20º to 70ºC (-4º to 158ºF)
Humidity	5 to 95% (non-condensing)
Environmental Air	No corrosive gases permitted
Vibration	IEC60068-2-6 (Test Fc)
Shock	IEC60068-2-27 (Test Ea)
Field to Logic Side Isolation	1800VAC applied for 1 second
Insulation Resistance	>10MΩ @ 500VDC
Heat Dissipation	6.4 W
Enclosure Type	Open equipment
Module Keying to Backplane	Electronic
Module Location	Any I/O slot in a Productivity2000 system
Field Wiring	Use ZIPLink wiring system ONLY. See Wiring Solutions. Must use copper conductors 75ºC or equivalent.
Connector Type	24-Pin Molex Style 43025-2400
Weight	90g (3.2 oz)
Agency Approvals**	UL508 File E139594, Canada & USA CE (EN61131-2*)

**Meets EMC and Safety requirements. See the Declaration of Conformity for details.*
***To obtain the most current agency approval information, see the Agency Approval Checklist section on the specific component part number web page.*

Connector Specifications	
Connector Type	24-Pin Molex Style 43025-2400
Number of Pins	24
Pin Spacing	3x3 mm (0.118 x 0.118 in)

Analog Output Modules

P2-16DA-2 Wiring Diagrams

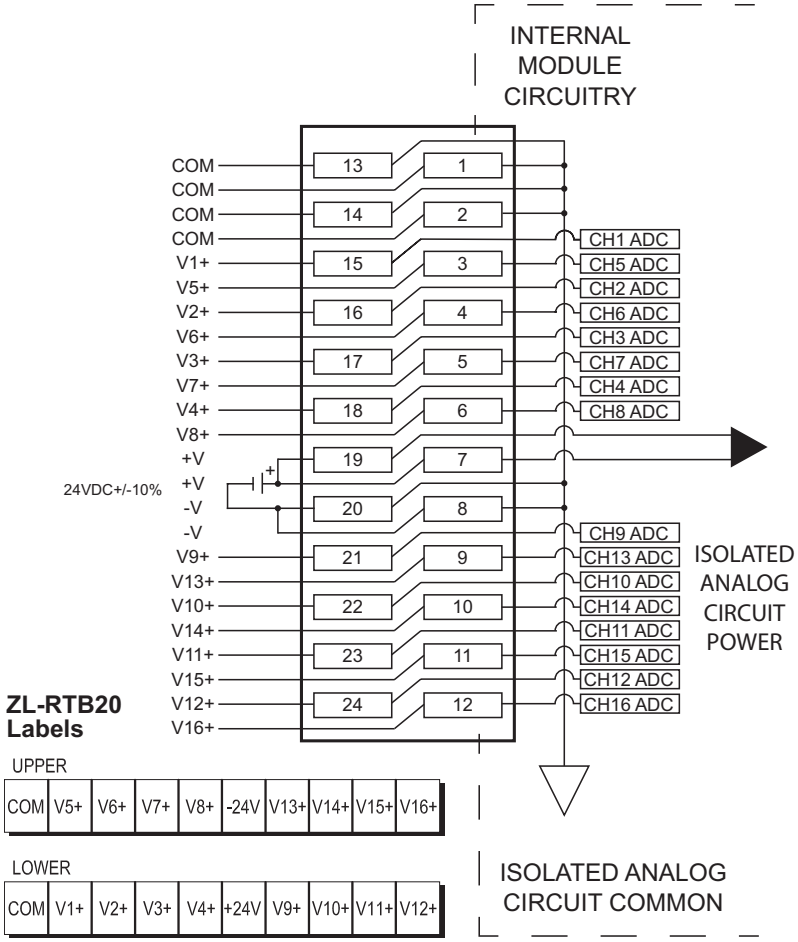

Voltage Output Circuits

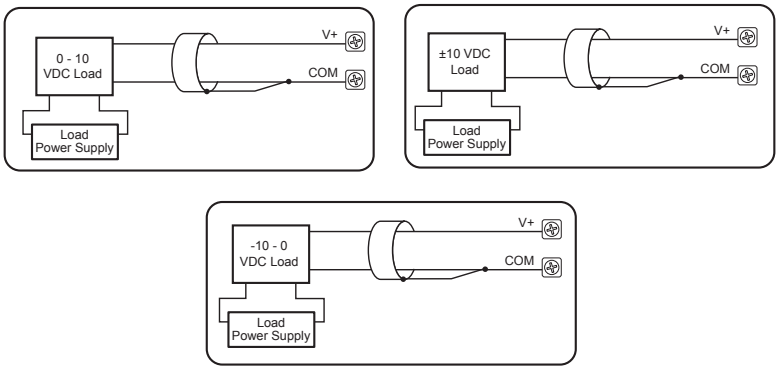

Analog Output Modules

P2-16DAL-1 $371.00

Current Analog Output
The P2-16DAL-1 Low Resolution Current Analog Output Module provides sixteen channels of 4–20mA sourcing output signals.

No terminal block sold for this module; ZIPLink required.

Output Specifications	
Output Channels	16
Module Signal Output Range	4–20mA sourcing
Signal Resolution	12-bit
Resolution Value of LSB (least significant bit)	4–20mA = 3.9 µA / count 1 LSB = 1 count
Data Range	0 to 4095 counts
Output Type (sourcing)	Current: 20mA max
Output Value in Fault Mode	Less than 4mA
Load Impedance	0–570Ω (19.2 VDC) 0–690Ω (21.6 VDC) 0–810Ω (24VDC) 0–930Ω (26.4 VDC) 0–1100Ω (30VDC) Minimum Load: 0Ω @ 0–45°C 125Ω @ 45–60°C ambient temperature
Maximum Inductive Load	1mH
Allowed Load Type	Grounded
Maximum Inaccuracy	1% of range (including temperature drift)
Maximum Full Scale Calibration Error (Including Offset)	±0.2% of range minimum
Maximum Offset Calibration Error	±0.2% of range maximum
Accuracy vs. Temperature	±75PPM / °C maximum full-scale calibration change (±0.005% of range / °C)
Max Crosstalk at DC, 50/60Hz	-72dB, 1 LSB
Linearity Error (End to End)	±4 LSB max., (±0.1% of full scale) Monotonic with no missing codes
Output Stability and Repeatability	±2 count after 10 min. warm up (typical)
Output Ripple	±0.1% of full scale
Output Settling Time	0.3 ms max., 5µ min. (full scale range)
All Channel Update Rate	1ms
Maximum Continuous Overload	Outputs open circuit protected
Type of Output Protection	Electronically current limited to 20mA or less
Output Signal at Power Up and Power Down	4mA
External DC Power Required	24VDC @ 410mA (Loop Power Included)

Connector Specifications	
Connector Type	24-Pin Molex Style 43025-2400
Number of Pins	24
Pin Spacing	3 x 3 mm (0.118 x 0.118 in)

NOTE: The most recent Productivity Suite software and firmware versions may be required to support new modules and new features.

We recommend using pre-wired ZIPLink cables and connection modules. See Wiring Solutions. Module connector type is a 24-pin Molex Style 43025-2400.

Analog Output Modules

P2-16DAL-1 (cont'd)

General Specifications	
Operating Temperature	0º to 60ºC (32º to 140ºF)
Storage Temperature	-20º to 70ºC (-4º to 158ºF)
Humidity	5 to 95% (non-condensing)
Environmental Air	No corrosive gases permitted
Vibration	IEC60068-2-6 (Test Fc)
Shock	IEC60068-2-27 (Test Ea)
Field to Logic Side Isolation	1800VAC applied for 1 second
Insulation Resistance	>10MΩ @ 500VDC
Heat Dissipation	10000mW (Loop Power Included)
Enclosure Type	Open equipment
Module Keying to Backplane	Electronic
Module Location	Any I/O slot in a Productivity2000 system
Field Wiring	Use ZIPLink wiring system ONLY. See Wiring Solutions. Must use copper conductors 75ºC or equivalent.
Connector Type	24-Pin Molex Style 43025-2400
Weight	90g (3.2 oz)
Agency Approvals	UL508 File E139594, Canada & USA CE (EN61131-2*)

**Meets EMC and Safety requirements. See the Declaration of Conformity for details.*
***To obtain the most current agency approval information, see the Agency Approval Checklist section on the specific component part number web page.*

Wiring Diagrams

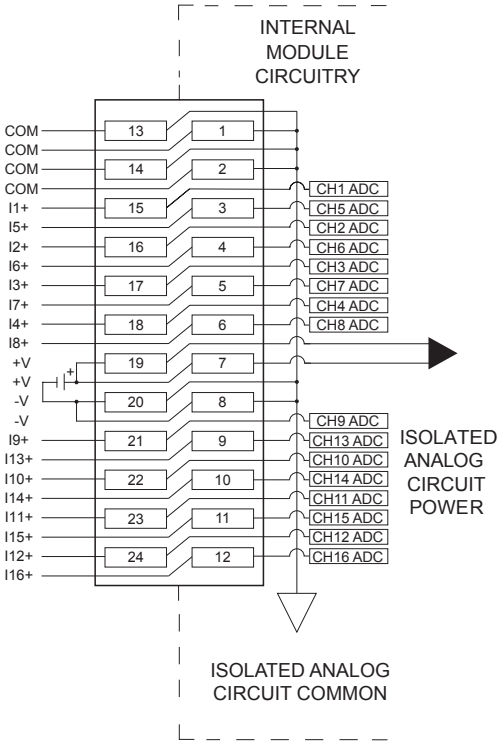

Current Sourcing Output Circuit

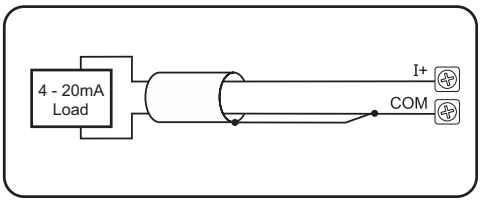

Note: Shield is connected to common at the source device.

Analog Output Modules

P2-16DAL-2 $355.00

Voltage Analog Output
The P2-16DAL-2 Low Resolution Voltage Analog Output Module provides sixteen channels of 0–10 VDC outputs.

No terminal block sold for this module; ZIPLink required.

NOTE: The most recent Productivity Suite software and firmware versions may be required to support new modules and new features.

We recommend using pre-wired ZIPLink cables and connection modules. See Wiring Solutions. Module connector type is a 24-pin Molex Style 43025-2400.

This module can be used with ZIPLink CONNECTION SYSTEMS

Output Specifications	
Output Channels	16
Module Signal Input Range	0–10V
Output Signal Resolution	12-bit
Resolution Value of LSB (least significant bit)	0–10V = 2.44 mV per count 1 LSB = 1 count
Data Range	0 to 4095 counts
Output Type	Voltage sourcing at 10mA max. (1 common)
Output Value in Fault Mode	0V
Output Impedance	0.2 Ω typical
Maximum Capacitive Load	0.01 µF maximum
Allowed Load Type	Grounded
Maximum Inaccuracy	0.5% of range (including temperature drift)
Maximum Full Scale Calibration Error	±0.2% of range maximum voltage
Maximum Offset Calibration Error	±0.2% of range maximum
Accuracy vs. Temperature	±75PPM / °C maximum full-scale calibration change (±0.0025% of range / °C)
Max Crosstalk at DC, 50/60Hz	-72dB, 1 LSB
Linearity Error (End to End)	±4 LSB maximum, (±0.1% of full scale) Monotonic with no missing codes
Output Stability and Repeatability	±2% LSB after 10 min. warm up period
Output Ripple	±0.1% of full scale
Output Settling Time	300µs max., 5µ min. (full scale range)
All Channel Update Rate	1ms
Maximum Continuous Overload	Outputs current limited to 40mA typical; Continuous overloads on multiple outputs can damage the module.
Type of Output Protection	0.1 µF Transient Suppressor
External 24VDC Power Required	24VDC (-20% / + 25%), 265mA

General Specifications	
Surrounding Temperature	0º to 60ºC (32º to 140ºF)
Storage Temperature	-20º to 70ºC (-4º to 158ºF)
Humidity	5 to 95% (non-condensing)
Environmental Air	No corrosive gases permitted
Vibration	IEC60068-2-6 (Test Fc)
Shock	IEC60068-2-27 (Test Ea)
Field to Logic Side Isolation	1800VAC applied for 1 second
Insulation Resistance	>10MΩ @ 500VDC
Heat Dissipation	8W
Enclosure Type	Open equipment
Module Keying to Backplane	Electronic
Module Location	Any I/O slot in a Productivity2000 system
Field Wiring	Use ZIPLink wiring system ONLY. See Wiring Solutions. Must use copper conductors 75ºC or equivalent.
Terminal Type	24-Pin Molex Style 43025-2400
Weight	100g (3.5 oz)
Agency Approvals*	UL508 File E139594, Canada & USA CE (EN61131-2*)

**Meets EMC and Safety requirements. See the Declaration of Conformity for details.*
***To obtain the most current agency approval information, see the Agency Approval Checklist section on the specific component part number web page.*

Analog Output Modules

P2-16DAL-2 (cont'd)

Connector Specifications	
Connector Type	24-Pin Molex Style 43025-2400
Number of Pins	24
Pin Spacing	3x3 mm (0.118 x 0.118 in)

Wiring Diagrams

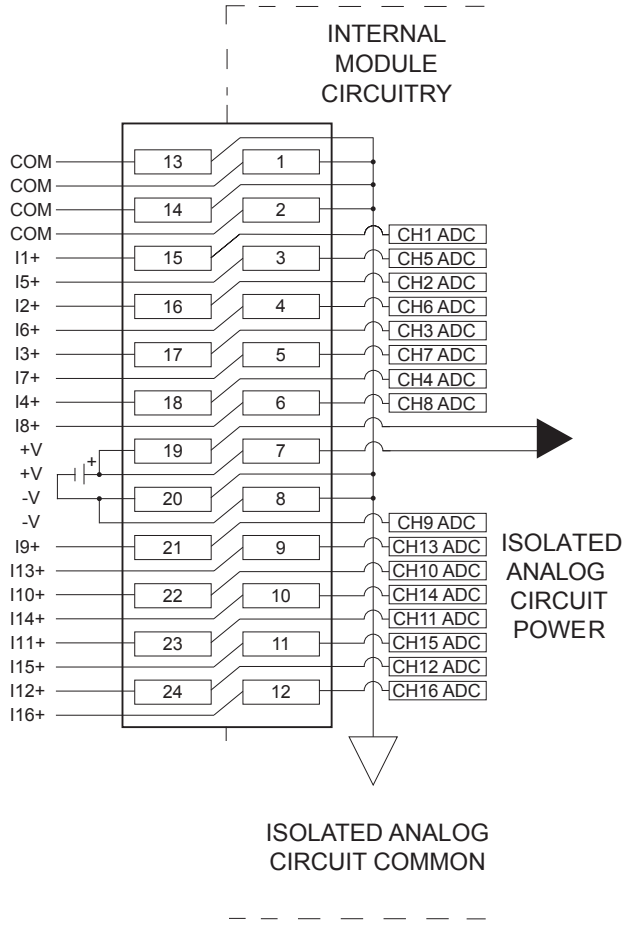

Voltage Output Circuits

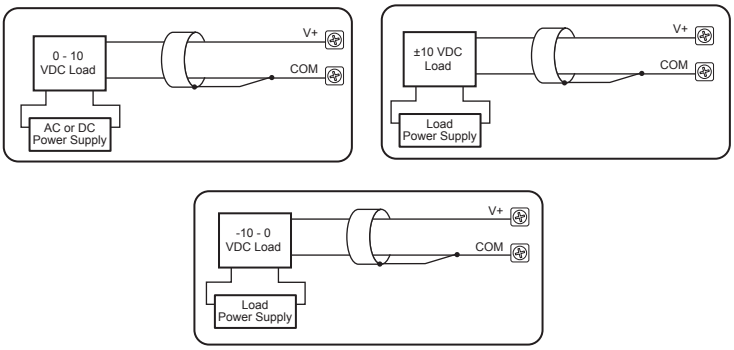

Analog Input/Output Modules

P2-8AD4DA-1 $456.00

Current Analog Input/Output

The P2-8AD4DA-1 Current Analog Input/ Output Module provides eight channels of current sinking 0–20 mA inputs and four channels of current sourcing 4–20 mA outputs.

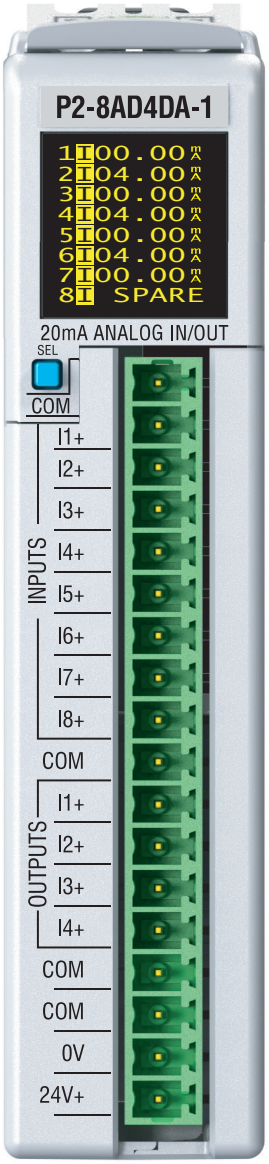

Terminal block sold separately.

Input Specifications	
Input Channels	8 (1 common)
Module Signal Input Range	0–20mA (Sinking)
Signal Resolution	12–16 bit, depending on input resolution
Input Resolution & Update Rate (See Note 1)	Fine: 8ms, 0.305 µA, 16 bit Medium: 2ms, 1.22 µA, 14 bit Coarse: 700µs, 4.88 µA, 12 bit
Data Range	0–65535 counts
Input Type	Sinking, Single Ended (1 common)
Maximum Continuous Overload	±31mA
Input Impedance	250Ω ±0.1%, 1/4W
Hardware Filter Characteristics	Low pass 1st order, -3dB @ 48Hz
All Channel Update Rate (See Note 2)	Fine 57ms Medium: 17ms Coarse: 7ms
Open Circuit Detection Time	Zero reading within 1s
Conversion Method	Successive approximation
Accuracy vs. Temperature	±15PPM/°C maximum
Maximum Inaccuracy	0.1% of range
Linearity Error (end to end)	0.015% of range maximum Monotonic with no missing codes
Input Stability and Repeatability	±0.015% of range (after 10 minute warm-up)
Full Scale Calibration Error (not including offset)	±0.05% of range maximum
Offset Calibration Error	±0.05% of range maximum
Maximum Crosstalk	-96dB ±1 -0.015% of full scale maximum
Recommended Fuse (external)	Edison S500-32-R, 0.032 A fuse
External DC Power Required	24VDC (-20% / +25%), 145mA

NOTE 1: The Input Resolution of Fine returns 16 bit resolution. Medium and Coarse are 14 and 12 bit respectively. The 12 and 14 bit input values are scaled to 0–65535.
NOTE 2: Valid when all channels are set for the same Input Resolution.

Removable Terminal Block Specifications		
Part Number	***P2-RTB***	***P2-RTB-1***
Number of positions	18 screw terminals	18 push release terminals
Wire Range	30–16 AWG (0.051–1.31 mm²) Solid/stranded conductor 3/64 in (1.2 mm) insulation max. 1/4 in (6–7 mm) strip length	28–16 AWG (0.081–1.31 mm²) Solid/stranded conductor 3/64 in (1.2 mm) insulation max. 19/64 in (7–8 mm) strip length
Conductors	USE COPPER CONDUCTORS, 75ºC or equivalent.	
Screw Driver Width	0.1 in. (2.5 mm) maximum	NA
Screw Size	M2	N/A
Screw Torque	2.5 lb·in (0.28 N·m)	N/A

** Recommended screw driver: P/N TW-SD-MSL-1.*

We recommend using prewired ZIPLink cables and connection modules. See Wiring Solutions. If you wish to hand-wire your module, a removable terminal block is sold separately. Order part number P2-RTB or P2-RTB-1.

Analog Input/Output Modules

P2-8AD4DA-1 (cont'd)

General Specifications	
Operating Temperature	0º to 60ºC (32º to 140ºF)
Storage Temperature	-20º to 70ºC (-4º to 158ºF)
Humidity	5 to 95% (non-condensing)
Altitude	2,000 meters, max.
Pollution Degree	2
Environmental Air	No corrosive gases permitted
Vibration	IEC60068-2-6 (Test Fc)
Shock	IEC60068-2-27 (Test Ea)
Field to Logic Side Isolation	1800VAC applied for 1 second
Insulation Resistance	>10MΩ @ 500VDC
Heat Dissipation	2.47 W
Overvoltage Category	II
Enclosure Type	Open equipment
Module Keying to Backplane	Electronic
Module Location	Any I/O slot in a Productivity2000 system
Field Wiring	Use ZIPLink wiring system or removable terminal block (not included). See Wiring Solutions.
Connector Type (Sold separately)	18-Position Removable Terminal Block
Weight	90g (3.2 oz)
Agency Approvals*	UL 61010-1 and UL 61010-2-201 File E139594, Canada & USA CE (EN 61131-2 EMC, EN 61010-1 and EN 61010-2-201 Safety)*

**Meets EMC and Safety requirements. See the Declaration of Conformity for details.*
***To obtain the most current agency approval information, see the Agency Approval Checklist section on the specific component part number web page.*

Output Specifications	
Output Channels	4 (1 common)
Module Signal Output Range	4–20mA
Output Signal Resolution	16-bit
Resolution Value of LSB (least significant bit)	0.244 µA / count 1 LSB = 1 count
Data Range	0–65535 counts
Output Type	Current sourcing: 20mA max
Output Value in Fault Mode	≤ 4mA
Load Impedance (Minimum External Power Supply)	0–480 Ω (19.2 VDC) 0–600 Ω (21.6 VDC) 0–715 Ω (24VDC) 0–840 Ω (26.4 VDC) 0–1010 Ω (30VDC)
Maximum Inductive Load	1mH
Allowed Load Type	Grounded
Maximum Inaccuracy	0.1% of range
Maximum Full Scale Calibration Error (not including offset error)	±0.065% of full scale
Maximum Offset Calibration Error	±0.065% of full scale
Accuracy vs. Temperature	±15PPM/°C max full scale calibration change (±0.0025% of range/°C)
Max Crosstalk	-96dB, 1 LSB
Linearity Error (End to End)	±0.015% of range maximum Monotonic with no missing codes
Output Stability and Repeatability	±0.015% after 10 minute warm-up typical
Output Ripple	0.01% of full scale at 50/60 Hz
Output Setting Time	Rising Time 200µs Falling Time 135µs (full scale change)
All Channel Update Rate	3.55 ms
Maximum Continuous Overload	Outputs open circuit protected
Type of Output Protection	Electronically current limited to 20mA or less
Output Signal (power-up, -down)	≤ 4mA

Wiring Diagrams

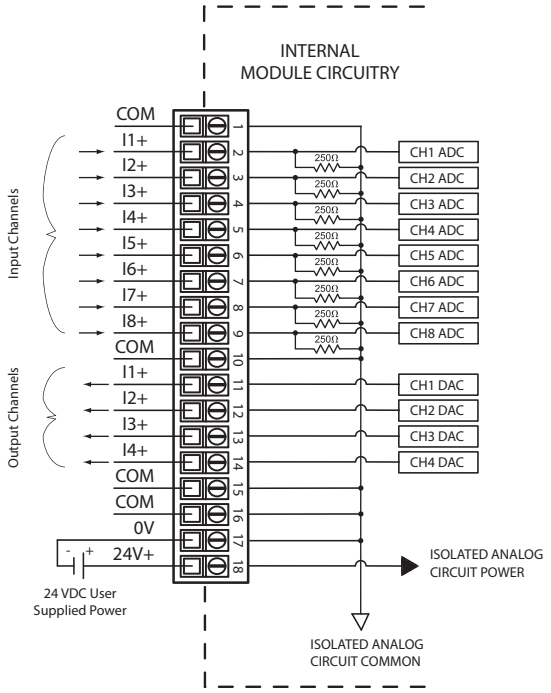

Note: This module includes input and output channels. Before connecting field wiring, verify that you are connecting to the appropriate terminals

Current Input Circuits

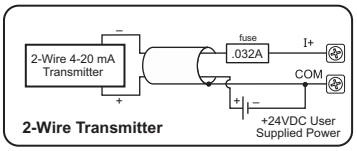

2-Wire Transmitter

An Edison S500-32-R 0.032A fast-acting fuse is recommended for all 4-20 mA current loops.

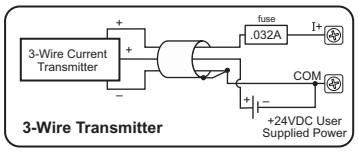

3-Wire Transmitter

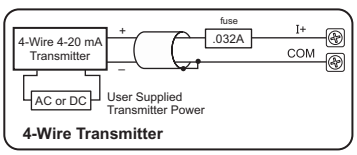

4-Wire Transmitter

Note: Do not connect both ends of shield.

Current Output Circuits

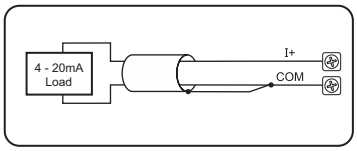

Note: Shield is connected to common at the source device.

Analog Input/Output Modules

P2-8AD4DA-2 $456.00

Voltage Analog Input/Output

The P2-8AD4DA-2 Voltage Analog Input/ Output Module provides eight channels of 0–5 VDC or 0–10 VDC inputs and four channels of 0–5 VDC or 0–10 VDC outputs.

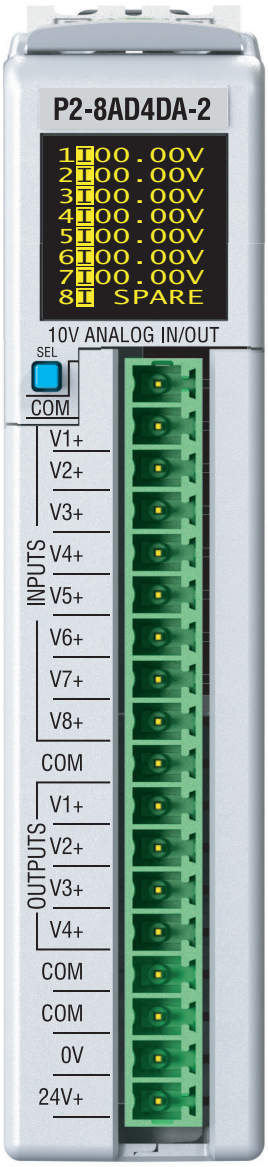

Terminal block sold separately.

Input Specifications	
Input Channels	8 inputs (1 common)
Input Ranges	0–5 VDC, 0–10 VDC
Signal Resolution	12–16 bit, depending on input resolution
0–5 V Input Resolution & Update Rate (See Note 1)	Fine: 7.1 ms, 76µV, 16 bit Medium: 1.78 ms, 305µV, 14 bit Coarse: 444µs, 1.22 mV, 12 bit
0–10 V Input Resolution & Update Rate (See Note 1)	Fine: 7.1 ms, 152µV, 16 bit Medium: 1.78 ms, 610µV, 14 bit Coarse: 444µs, 2.44 mV, 12 bit
Data Range	0–65535 counts
Maximum Continuous Overload	±100V, voltage input
Input Impedance	1MΩ (±10%) voltage input
Hardware Filter Characteristics	Low pass 1st order, -3dB @ 80Hz
All Channel Update Rate (See Note 2)	Fine 56.8 ms Medium: 14.24 ms Coarse: 3.55 ms
Conversion Method	Successive approximation
Accuracy vs. Temperature	±15PPM/°C maximum
Maximum Inaccuracy	0.1% of range
Linearity Error (end to end)	±0.015% of range maximum Monotonic with no missing codes
Input Stability and Repeatability	±0.025% of range (after 10 minute warm-up)
Full Scale Calibration Error (not including offset)	±0.05% of range maximum
Offset Calibration Error	±0.05% of range maximum
Maximum Crosstalk	-96dB, 1LSB
External DC Power Required	24VDC (-20% / +25%), 130mA

NOTE 1: The Input Resolution of Fine returns 16 bit resolution. Medium and Coarse are 14 and 12 bit respectively. The 12 and 14 bit input values are scaled to 0-65535.
Note 2: Valid when all channels are set for the same Input Resolution.

Removable Terminal Block Specifications		
Part Number	***P2-RTB***	***P2-RTB-1***
Number of positions	18 screw terminals	18 push release terminals
Wire Range	30–16 AWG (0.051–1.31 mm²) Solid/stranded conductor 3/64 in (1.2 mm) insulation max. 1/4 in (6–7 mm) strip length	28–16 AWG (0.081–1.31 mm²) Solid/stranded conductor 3/64 in (1.2 mm) insulation max. 19/64 in (7–8 mm) strip length
Conductors	USE COPPER CONDUCTORS, 75ºC or equivalent.	
Screw Driver Width	0.1 in. (2.5 mm) maximum	NA
Screw Size	M2	N/A
Screw Torque	2.5 lb·in (0.28 N·m)	N/A

** Recommended screw driver: P/N TW-SD-MSL-1.*

We recommend using prewired ZIPLink cables and connection modules. See Wiring Solutions.
If you wish to hand-wire your module, a removable terminal block is sold separately. Order part number P2-RTB or P2-RTB-1.

Analog Input/Output Modules

P2-8AD4DA-2 (cont'd)

General Specifications	
Operating Temperature	0° to 60°C (32° to 140°F)
Storage Temperature	-20° to 70°C (-4° to 158°F)
Humidity	5 to 95% (non-condensing)
Environmental Air	No corrosive gases permitted
Vibration	IEC60068-2-6 (Test Fc)
Shock	IEC60068-2-27 (Test Ea)
Field to Logic Side Isolation	1800VAC applied for 1 second
Insulation Resistance	>10MΩ @ 500VDC
Heat Dissipation	1.95 W
Enclosure Type	Open equipment
Module Keying to Backplane	Electronic
Module Location	Any I/O slot in a Productivity2000 system
Field Wiring	Use ZIPLink wiring system or removable terminal block (not included). See Wiring Solutions.
Connector Type (Sold separately)	18-Position Removable Terminal Block
Weight	90g (3.2 oz)
Agency Approvals**	UL 61010-1 and UL 61010-2-201 File E139594, Canada & USA CE (EN 61131-2 EMC, EN 61010-1 and EN 61010-2-201 Safety)*

**Meets EMC and Safety requirements. See the Declaration of Conformity for details.*
***To obtain the most current agency approval information, see the Agency Approval Checklist section on the specific component part number web page.*

Output Specifications	
Output Channels	4 (1 common)
Module Signal Output Range	0–10 VDC, 0–5 VDC
Output Signal Resolution	16-bit
Resolution Value of LSB (least significant bit)	0– 5V = 76µV/count 0–10V = 152µV/count 1 LSB = 1 count
Data Range	0–65535 counts
Output Type	Voltage sourcing/sinking at 10mA maximum
Output Value in Fault Mode	0V
Load Impedance	≥1.5 kΩ
Maximum Capacitive Load	0.01 µF
Allowed Load Type	Grounded
Maximum Inaccuracy	0.1% of range
Maximum Full Scale Calibration Error (not including offset error)	±0.065% of range maximum
Maximum Offset Calibration Error	±0.065% of range maximum
Accuracy vs. Temperature	±25PPM/°C max full scale calibration change (±0.0025% of range/°C)
Max Crosstalk	-96dB, 1 LSB
Linearity Error (End to End)	±0.015% of full scale Monotonic with no missing codes
Output Stability and Repeatability	±0.015% after 10 minute warm-up typical
Output Ripple	0.01% of full scale at 50/60 Hz
Output Setting Time	500µs max, 5µs min (full scale change)
All Channel Update Rate	5ms
Maximum Continuous Overload	Outputs current limited to 15mA typical
Type of Output Protection	15VDC peak output voltage
Output Signal (power-up, -down)	0V

Wiring Diagrams

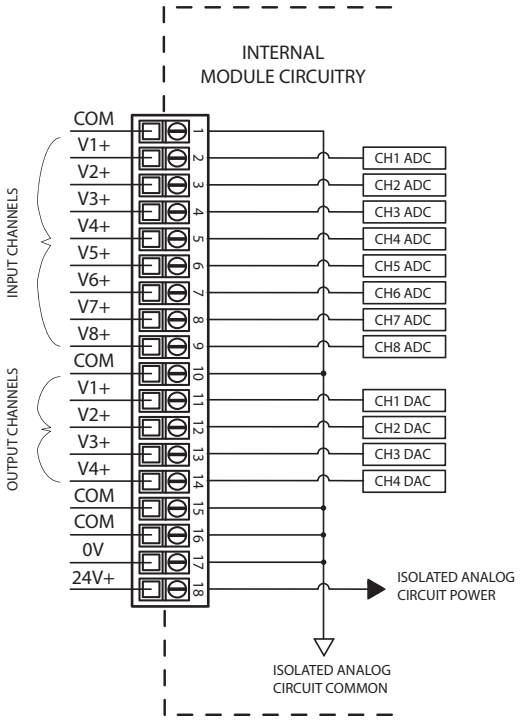

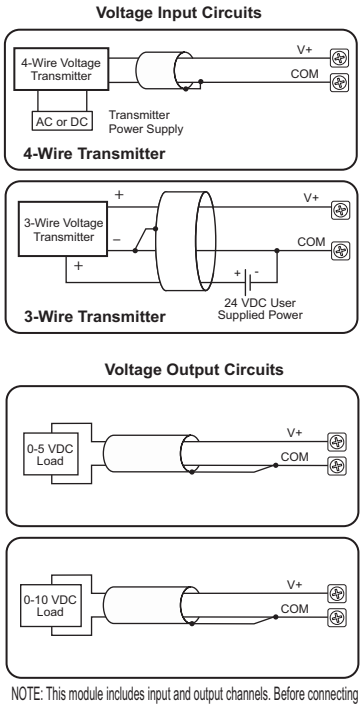

NOTE: This module includes input and output channels. Before connecting field wiring, verify that you are connecting to the appropriate terminals.

Specialty Modules

P2-HSI $288.00

High-Speed Pulse Input

The P2-HSI is a high-speed pulse (1MHz) input module with differential (line receiver, 5V max.) and single ended (5–24 V) inputs that accept up to 1MHz of pulse/direction and quadrature signals on each of the two independent input channels. It also provides four general purpose high-speed inputs and four general purpose 5–24 VDC 0.5 amp outputs.

No terminal block sold for this module; ZIPLink required.

NOTE: The most recent Productivity Suite software and firmware versions may be required to support new modules and new features.

See Wiring Solutions for part numbers of ZIPLink cables and connection modules required with this I/O module.

This module can be used with ZIPLINK CONNECTION SYSTEMS

General Specifications	
Module Type	Intelligent
Modules per Base	15 Maximum (See Note)
I/O Points Used	None, mapped directly to tags in CPU
Operating Temperature	0º to 60ºC (32º to 140ºF)
Storage Temperature	-20º to 70ºC (-4º to 158ºF)
Humidity	5 to 95% (non-condensing)
Environmental Air	No corrosive gases permitted
Vibration	IEC 60068-2-6 (Test Fc)
Shock	IEC 60068-2-27 (Test Ea)
Field to Logic Side Isolation	1800VAC applied for 1 second
Insulation Resistance	>10MΩ @ 500VDC
Heat Dissipation	5.76 W
Enclosure Type	Open equipment
Module Location	Any I/O slot in a Productivity2000 system
Field Wiring	Use ZIPLink wiring system ONLY. See Wiring Solutions.
Weight	90g (3.2 oz)
Agency Approvals**	UL 61010-1 and UL 61010-2-201 File E139594, Canada & USA CE (EN 61131-2 EMC, EN 61010-1 and EN 61010-2-201 Safety)*

**Meets EMC and Safety requirements. See the Declaration of Conformity for details.*
***To obtain the most current agency approval information, see the Agency Approval Checklist section on the specific component part number web page.*

Status LEDs	
Fault Status LEDs*	(F) 1, 2, 3 & 4 (one per status output)
Input LEDs	(IN) 1A, 1B, 1Z, 2A, 2B, 2Z, IN3 & IN4 (one per status input)
Output Status LEDs	(O) OUT1, OUT 2, OUT3 & OUT4

** All front panel fault LED's blinking indicates loss of 24VDC external power to the module.*

Connector Specifications	
Connector Type	IDC style header with latch, Omron XG4A-4034
Number of Pins	40 point
Pitch	0.1 in (2.54 mm)

Power Specifications	
External Power	24VDC -15% / +10%, Class 2
Maximum Voltage	26.4 VDC
Minimum Voltage	20.4 VDC
Current Consumption Excluding Outputs	50mA
Maximum Current Consumption Total of the 4 Status Outputs	2A

Specialty Modules

P2-HSI (cont'd)

Status Inputs

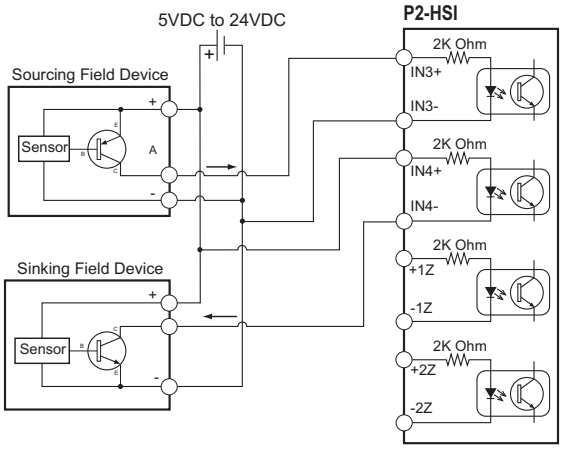

Single Ended (5-24V) Input Specifications	
Status Input	Single ended inputs (8 pts: 1A, 1B, 1Z, 2A, 2B, 2Z, 3IN, 4IN)
Isolation	Each input is isolated from other circuits
Input Volts Range	5–24 VDC
Input Volts Maximum	±34VDC, limited by protection
Input Impedance	1kΩ minimum, 5kΩ maximum
Input Rated Current	5–24 VDC, 16mA 5.2 mA typical @ 5VDC 22mA maximum @ 34VDC
Input Minimum ON Voltage	4.5 VDC
Input Maximum OFF Voltage	2.0 VDC
Input Minimum ON Current	5.0 mA
Input Maximum OFF Current	1.4 mA
OFF to ON Response Time	1A, 1B, 2A, 2B: 0.48 µs 1Z, 2Z, 3IN, 4IN: 6µs
ON to OFF Response Time	1A, 1B, 2A, 2B: 0.48 µs 1Z, 2Z, 3IN, 4IN: 6µs
Max. Input Frequency*	1A, 1B, 2A, 2B: 1MHz 1Z, 2Z, 3IN, 4IN: 200kHz

** Inputs are not limited to this speed but single ended signals are not usually reliable above 200 kHz due to cabling capacitance.*

Status Outputs

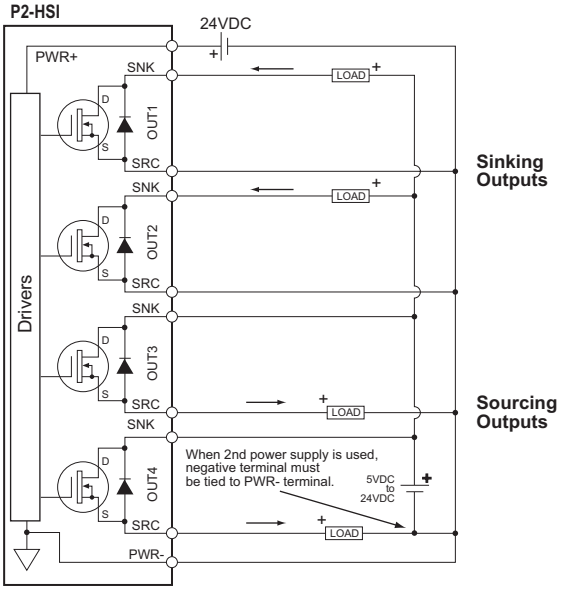

Status Output Specifications		
Status Outputs	4 sink/source	
Output Signal Type, per Channel Select	Current Sinking	Current Sourcing
Operating Voltage[1]	5–24 VDC	5–24 VDC[1]
Output Volts Maximum	36VDC	26.4 VDC[1]
Output Current Maximum	500mA	
Overcurrent Protection	Short circuit detect and current limit with automatic retry for each output	
Output Self Limiting Current	1.2 to 2.4 A	
Max Inrush Current	Self limited	
Output Voltage Drop	0.7 VDC @ 0.5 A	
Thermal Protection	Independent over temperature protection each output	
Output Voltage Clamp During Inductive Switching	+45VDC	-20VDC
Maximum OFF to ON Response	25µs[2]	
Maximum ON to OFF Response	25µs[2]	

NOTES:
1. Operating voltage of current sourcing outputs must be no greater than external power.
2. Measured at 5VDC operating voltage, 0.5 A load curent.

Specialty Modules

P2-HSI (cont'd)

Differential (5V) Input Specifications	
Pulse Inputs*	Differential inputs (6 pts: 1A, 1B, 1Z, 2A, 2B, 2Z)
Isolation	Each input is isolated from other circuits
Input Signal Type, per Channel Select	Differential
Input Volts	5VDC
Input Volts Maximum	±5.6 VDC, limited by protection
Input Impedance	200Ω minimum, 500Ω maximum
Inputs Rated Current	5VDC, 15mA (8mA typical, 15mA maximum)
Input Minimum ON Voltage	3.0 VDC
Input Maximum OFF Voltage	1.0 VDC
Input Minimum ON Current	5.0 mA
Input Maximum OFF Current	2.0 mA
OFF to ON Response Time	1A, 1B, 2A, 2B: 0.48 µs 1Z, 2Z, 3IN, 4IN: 6µs
ON to OFF Response Time	1A, 1B, 2A, 2B: 0.48 µs 1Z, 2Z, 3IN, 4IN: 6µs
Max. Input Frequency*	1A, 1B, 2A, 2B: 1MHz 1Z, 2Z, 3IN, 4IN: 200kHz

** The Z pulse input (1Z & 2Z) is capable of capturing a 1MHz wide pulse for the purpose of resetting an encoder count but a 3 microsecond pause (300kHz) is required between pulses.*
Note: The voltage difference between the input pairs must be between 3–5.6 volts.

5V Encoder Inputs

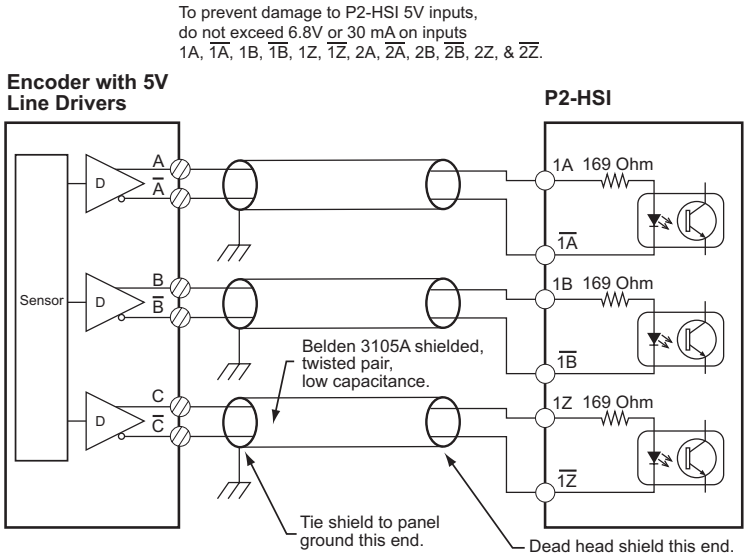

Specialty Modules

P2-HSI (cont'd)

24V Encoder Inputs

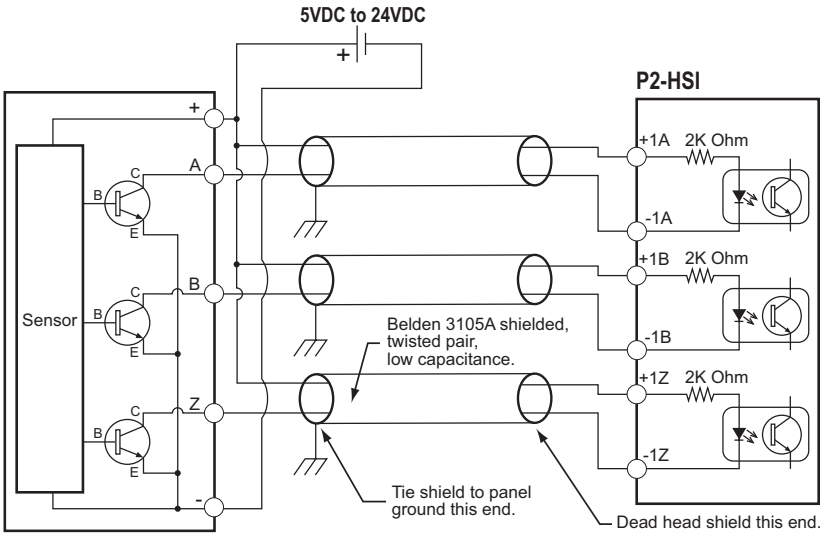

Sinking I/O Wiring Diagram

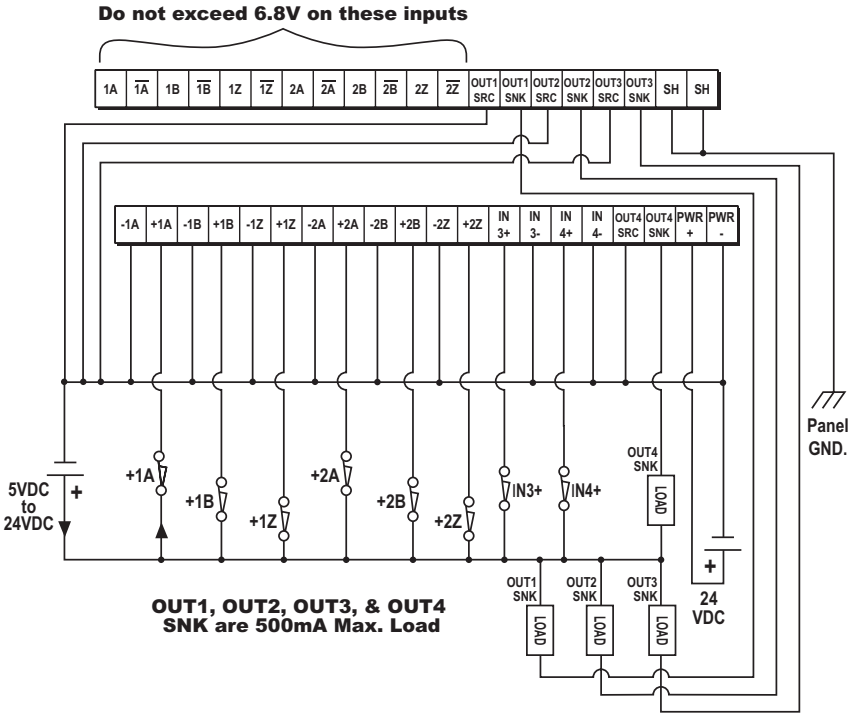

Specialty Modules

P2-HSI (cont'd)

Sourcing I/O Wiring Diagram

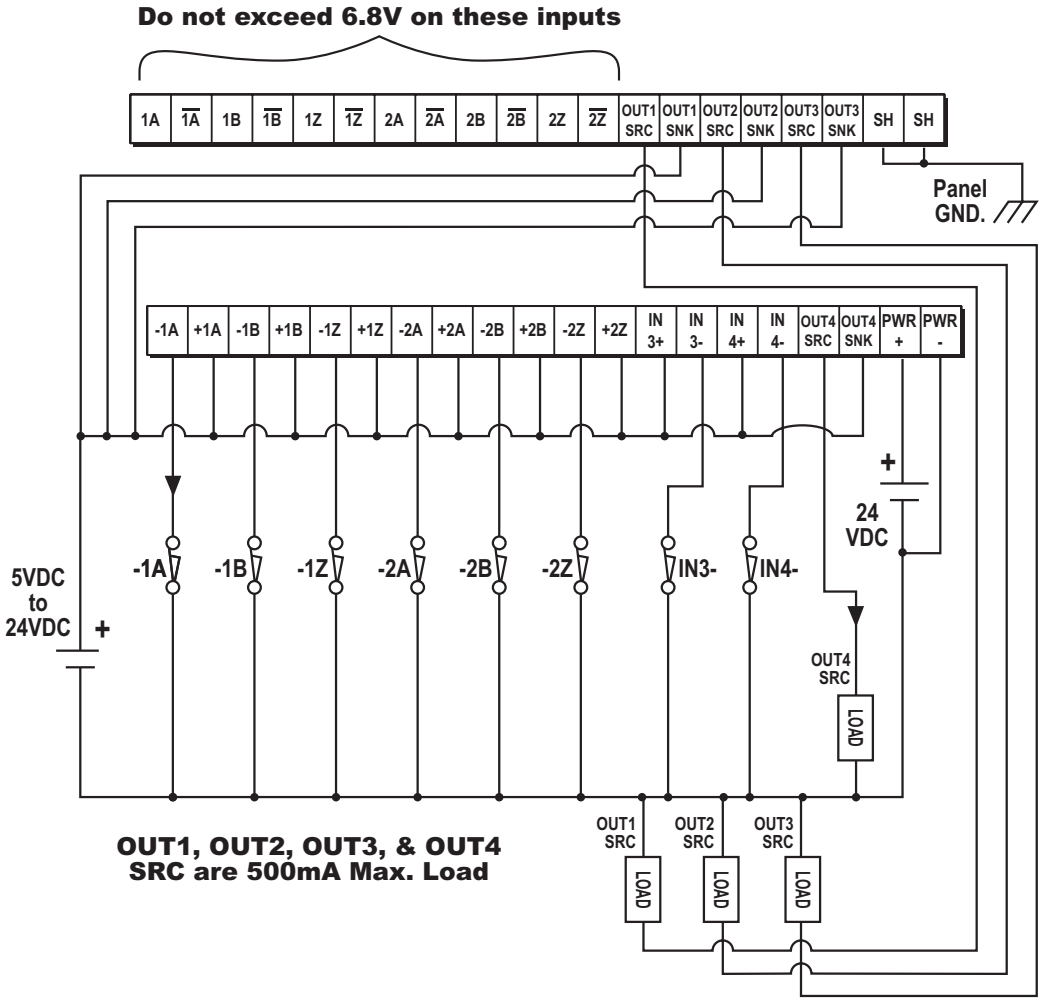

Specialty Modules

P2-HSI (cont'd)

Frequency Response

Inaccuracy of Frequency Measurements[1,2] for "Fast Mode"				
Input Frequency	*Sampling Period*	*Step/Dir*	*Quadrature 1X*	*Quadrature 4X*
1Hz	±1 Second	±1Hz	±1 Hz	±1 Hz
10Hz				
100Hz				
1kHz				
10kHz				
100kHz				
1MHz				

Resolution of Frequency Measurements for "Fast Mode"		
Input Frequency	*Sampling Period*	*Resolution*
1 Hz to 1 MHz	1000ms	±1Hz
10 Hz to 1 MHz	100ms	±10Hz
100 Hz to 1 MHz	10ms	±100Hz
1 MHz	1ms	±1000Hz

Inaccuracy of Frequency Measurements[1,2] for "Slow Mode"			
Input Frequency	*Step/Dir*	*Quadrature 1X*	*Quadrature 4X*
1Hz	±0.002 Hz	±0.002 Hz	±0.002 Hz
10Hz	±0.009 Hz	±0.009 Hz	±0.009 Hz
100Hz	±0.015 Hz	±0.015 Hz	±0.015 Hz
1kHz	±1Hz	±1Hz	±1Hz
10kHz	±100Hz	±100Hz	±100Hz
100kHz	±1000Hz	±1000Hz	±1000Hz
1MHz	±40000Hz	±40000Hz	±40000Hz

Inaccuracy of Frequency Measurements[1,2,3,4] for "Auto Mode"			
Input Frequency	*Step/Dir*	*Quadrature 1X*	*Quadrature 4X*
1Hz	±1Hz	±1Hz	±1Hz
10Hz	±1Hz	±1Hz	±1Hz
100Hz	±1Hz	±1Hz	±1Hz
1kHz	±1Hz	±1Hz	±1Hz
10kHz	±100Hz	±100Hz	±100Hz
100kHz	±1000Hz	±1000Hz	±1000Hz
1MHz	±10000Hz	±10000Hz	±10000Hz

1. For stable input signal at given input frequency.
2. For total measurement error add the time base error to the tabulated error.
3. Maximum sample period: 1 second.
4. Minimum sample period: 0.001 seconds.

Inaccuracy of Frequency Measurements Due to Time Base Errors	
25 MHz Crystal for Time Base	
Inaccuracy at 25°C, Maximum	±30PPM
Inaccuracy 0–60°C, Referenced to 25°C	±30PPM
Inaccuracy Due to Aging, Maximum	±5PPM/Year
Max. Time Base Inaccuracy 0–60°C and 10 Years Operation	0.01%

Module Range:	Target position range ±2.147 billion (32-bit signed integer)

Specialty Modules

P2-HSO $288.00

High-Speed Output

The P2-HSO High-Speed (1MHz) output module supports pulse/direction, up/down and quadrature pulse output on each of the two independent output channels. Additionally, it has six 5–24 VDC general purpose inputs and four
5–24 VDC general purpose outputs.

No terminal block sold for this module; ZIPLink required.

General Specifications	
Module Type	Intelligent
Modules per Base	15 Maximum (See Note)
I/O Points Used	None, mapped directly to tags in CPU
Operating Temperature	0º to 60ºC (32º to 140ºF)
Storage Temperature	-20º to 70ºC (-4º to 158ºF)
Humidity	5 to 95% (non-condensing)
Environmental Air	No corrosive gases permitted
Vibration	IEC 60068-2-6 (Test Fc)
Shock	IEC 60068-2-27 (Test Ea)
Field to Logic Side Isolation	1800VAC applied for 1 second
Insulation Resistance	>10MΩ @ 500VDC
Heat Dissipation	6.26 W
Enclosure Type	Open equipment
Emissions	EN61000-6-4 (Conducted and Radiated RF Emissions)
Module Keying to Backplane	Electronic
Module Location	Any I/O slot in a Productivity2000 system
Field Wiring	Use ZIPLink wiring system ONLY. See Wiring Solutions.
Weight	90g (3.2 oz)
Agency Approvals**	UL 61010-1 and UL 61010-2-201 File E139594, Canada & USA CE (EN 61131-2 EMC, EN 61010-1 and EN 61010-2-201 Safety)*

**Meets EMC and Safety requirements. See the Declaration of Conformity for details.*
***To obtain the most current agency approval information, see the Agency Approval Checklist section on the specific component part number web page.*

Status LEDs	
Fault Status LEDs*	(F) 1, 2, 3, 4, 5, 6 (one per pulse output and one per status output)
Input LEDs	(IN) 1, 2, 3, 4, 5, 6 (one per status input)
Output Status LEDs	(O) OUT 1A & 1B, OUT 2A & 2B, OUT 3, 4, 5, 6

** All front panel fault LED's blinking indicates loss of 24VDC external power to the module.*

Connector Specifications	
Connector Type	IDC style header with latch, Omron XG4A-4034
Number of Pins	40 point
Pitch	0.1 in (2.54 mm)

Power Specifications	
External Power	24VDC -15% / +10%, Class 2
Maximum Voltage	26.4 VDC
Minimum Voltage	20.4 VDC
Current Consumption Excluding Outputs	130mA
Maximum Current Consumption Total of the 4 Status Outputs	2A

NOTE: The most recent Productivity Suite software and firmware versions may be required to support new modules and new features.

See Wiring Solutions for part numbers of ZIPLink cables and connection modules required with this I/O module.

Specialty Modules

P2-HSO (cont'd)

Status Inputs

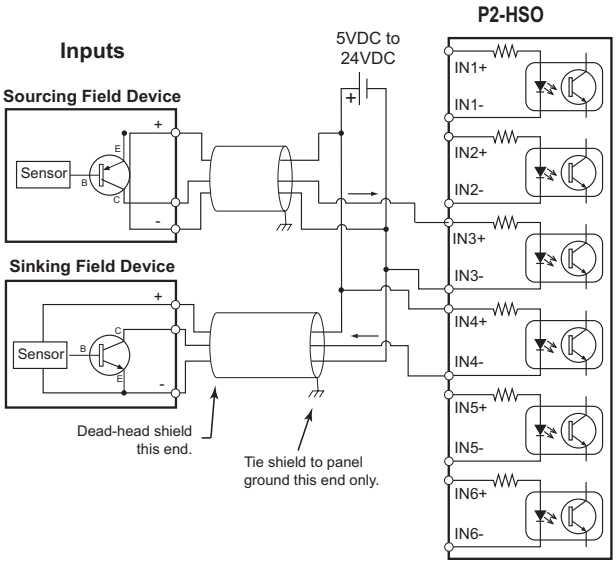

Status Input Specifications	
Status Input	6 sink/source
Isolation	Each status input is individually isolated from all other circuits
Input Volts Range	5–24 VDC
Input Volts Maximum	34VDC, limited by protection
Input Impedance	1kΩ minimum, 5kΩ maximum
Inputs Rated Current	5–24 VDC, 16mA 5.2 mA typical @ 5VDC 22mA maximum @ 34VDC
Input Minimum ON Voltage	4.5 VDC
Input Maximum OFF Voltage	2.0 VDC
Input Minimum ON Current	5.0 mA
Input Maximum OFF Current	1.4 mA
OFF to ON Response Time	4µs
ON to OFF Response Time	4µs

Notes:
Mechanical contacts are not recommended to be used as counter or encoder inputs as they may cause unreliable readings. The bounce of mechanical contacts can cause the input to see more edges than intended.

Status Outputs

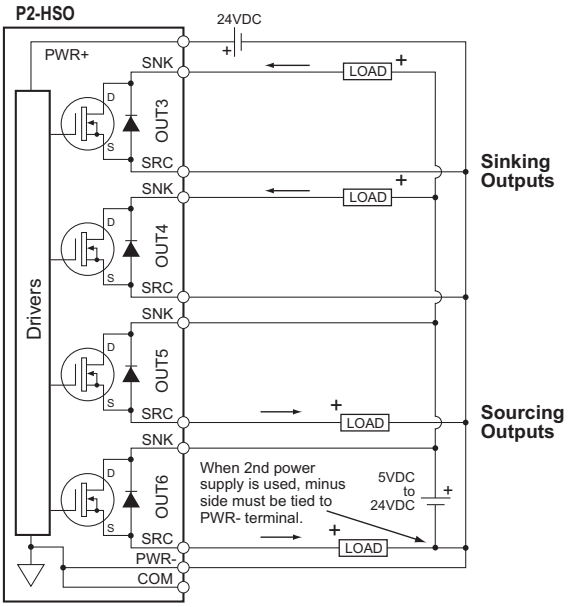

Status Output Specifications		
Status Outputs	4 sink/source	
Output Signal Type, per Channel Select	Current Sinking	Current Sourcing
Operating Voltage²	5–24 VDC	5–-24 VDC²
Output Volts Maximum²	36VDC	26.4 VDC²
Output Current Maximum	500mA	
Overcurrent Protection	Short circuit detect, overcurrent shutdown¹	
Output Self Limiting Current	1.2 to 2.4 A	
Max Inrush Current	Self limited	
Output Voltage Drop	0.7 VDC @ 0.5 A	
Thermal Protection	Independent over temperature protection each output	
Output Voltage Clamp During Inductive Switching	+45VDC	-20VDC
Maximum OFF to ON Response	25µs3	
Maximum ON to OFF Response	25µs3	

Notes:
1. Any fault shuts off the output. Fault is indicated and output is kept off until a new move start is received.
2. Operating voltage for current sourcing outputs must be less or equal to the external power.
3. Measured at 5VDC operating voltage, 0.5 A load.

Specialty Modules

P2-HSO (cont'd)

Pulse Output Specifications		
Pulse Outputs	2 Channels	
Output Pulse Type, per Channel Select	Selectable for pulse & direction, up/down or quadrature	
Output Signal Type, per Channel Select	RS-422 Line Driver Current Sinking and Sourcing	Open Drain FET Outputs Current Sinking
Output Volts	RS-422 levels	24VDC
Output Volts Maximum	5VDC	36VDC
Protection for Overcurrent and Short Circuit to Power	Current limit and thermal shutdown[2]	Current limit and thermal shutdown[1]
Protection Short to Ground	Yes	Yes
Overcurrent Trip Level	Output current limit ±200mA max[2]	100mA minimum
Maximum Continuous Output Current	±60mA	40mA
Maximum Switching Frequency, 1m cable3	1MHz	500kHz
Maximum Switching Frequency, 10m cable3	1MHz	200kHz

NOTES:
1. Any fault shuts off the output. Fault is indicated and output is kept off until a new move start is received.
2. RS-422 thermal faults auto reset after device cool down.
3. Outputs are not limited to these speeds but single ended signals produced by the FETs are not usually reliable above these speeds due to cabling capacitance.

Sinking Pulse Outputs

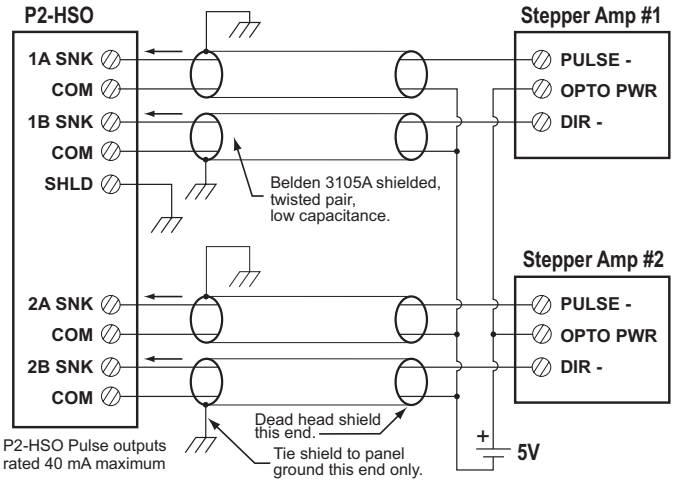

Line Driver Pulse Outputs

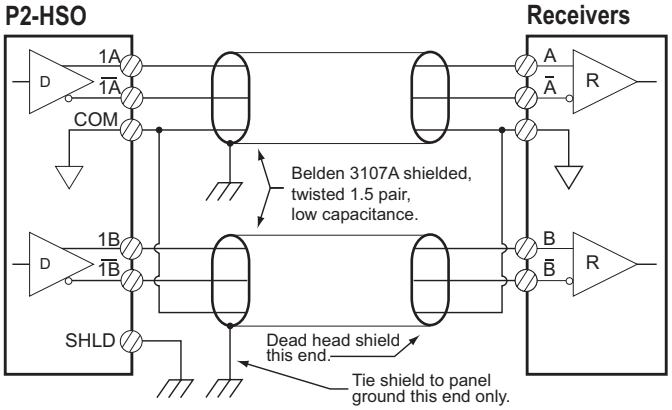

Specialty Modules

P2-HSO (cont'd)

SureServo Wiring Diagram

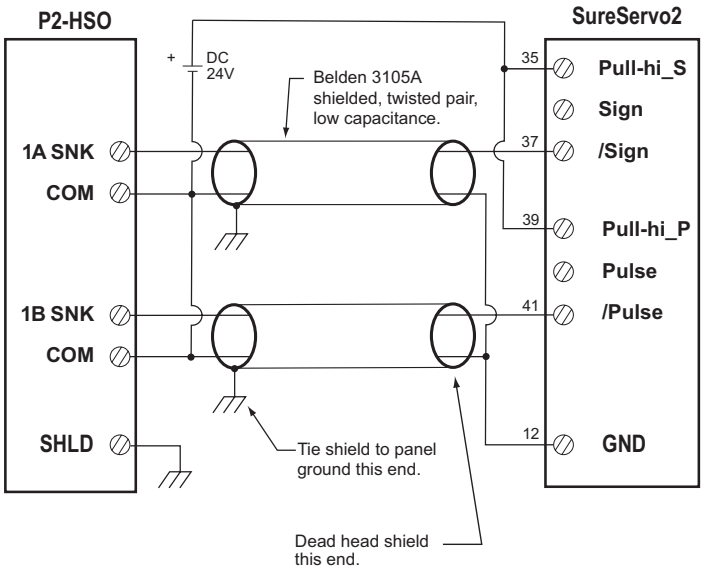

SureStep Wiring Diagram

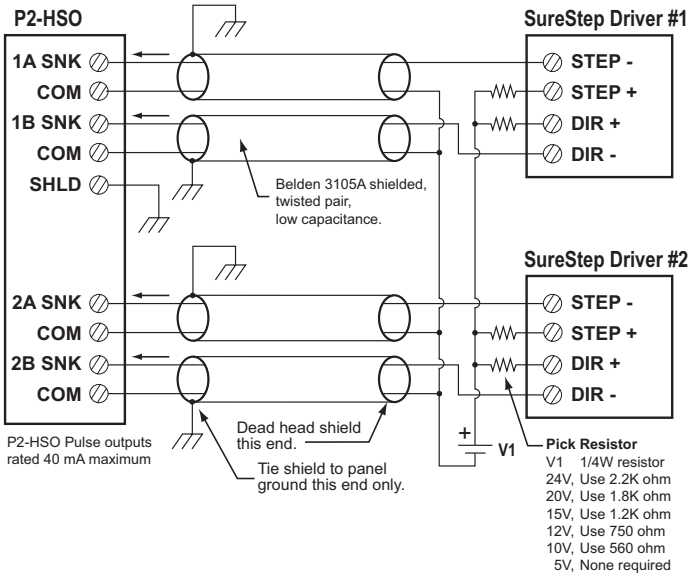

Specialty Modules

P2-HSO (cont'd)

Sinking I/O Wiring Diagram

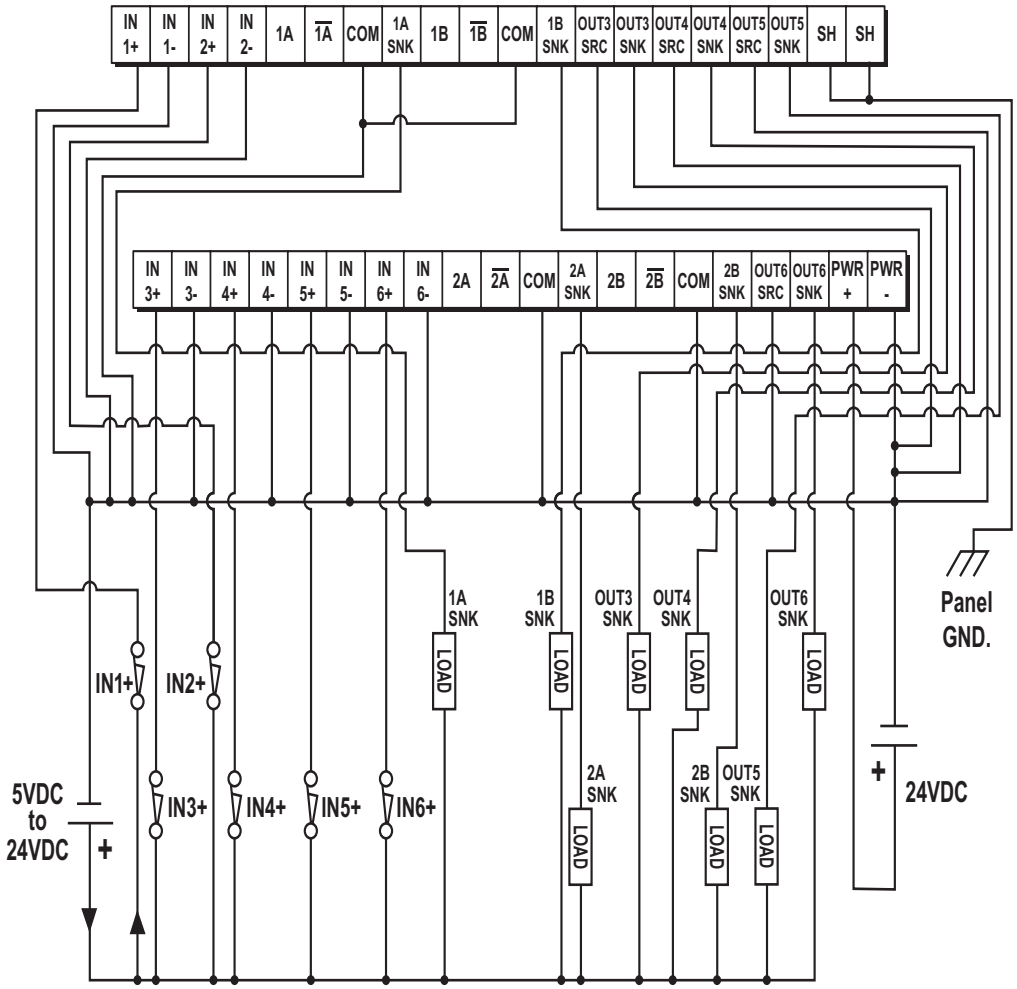

Specialty Modules

P2-HSO (cont'd)

Sourcing I/O Wiring Diagram

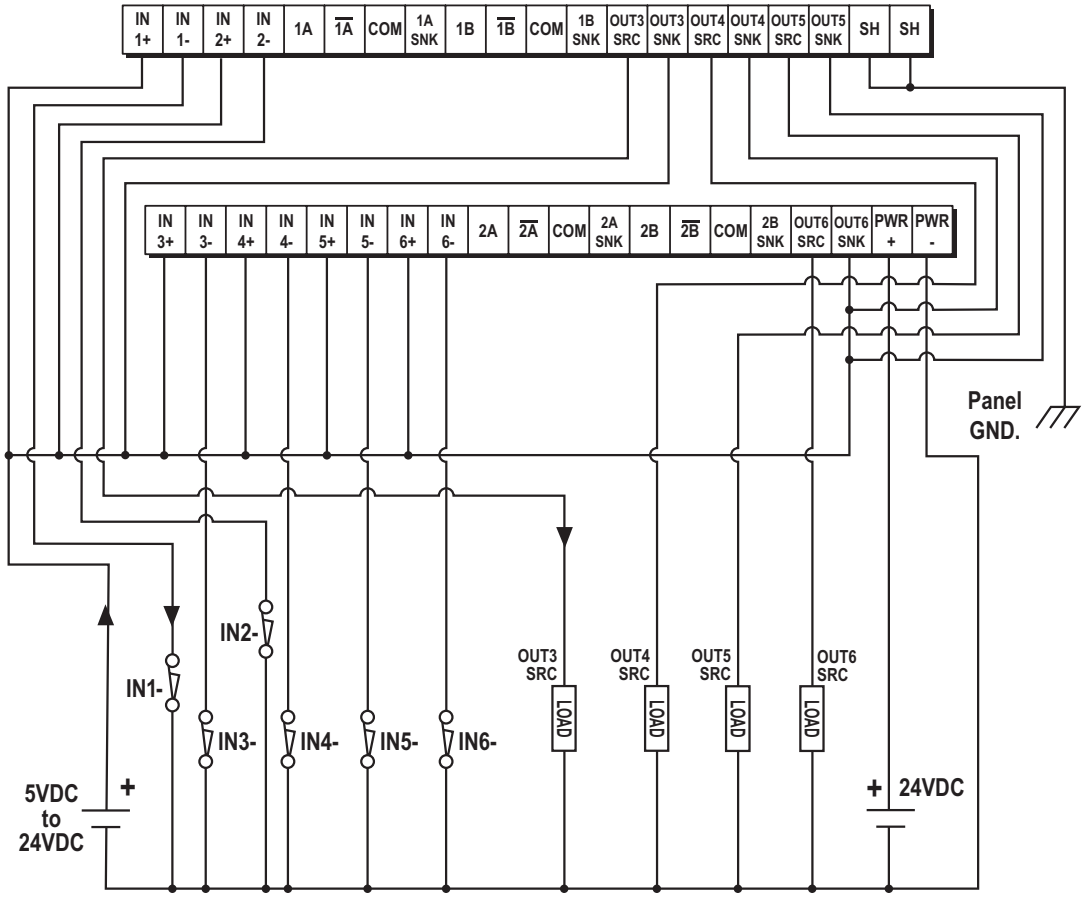

Resolution of Frequency Output Measurements	
Output Frequency	Resolution
1kHz	0.01 Hz
10kHz	0.67 Hz
100kHz	67Hz
1MHz	6622Hz

Module Range:	Target position range ±2.147 billion (32-bit signed integer)

Inaccuracy of Output Frequency Due to Time Base Errors	
25MHz Crystal for Time Base	
Inaccuracy at 25°C, Maximum	±30PPM
Inaccuracy 0–60°C, Referenced to 25°C	±30PPM
Inaccuracy Due to Aging, Maximum	±5PPM/Year
Max. Time Base Inaccuracy 0–60°C and 10 Years Operation	0.01%

Specialty Modules

P2-02HSC $120.00

High-Speed Counter Module

The P2-02HSC High-Speed Counter Module provides two independent single-ended 5–24 VDC inputs that accept up to 100kHz of pulse/direction and quadrature signals. Additionally, two 5–24 VDC general-purpose high-speed inputs are included for use with the Productivity®2000 system.

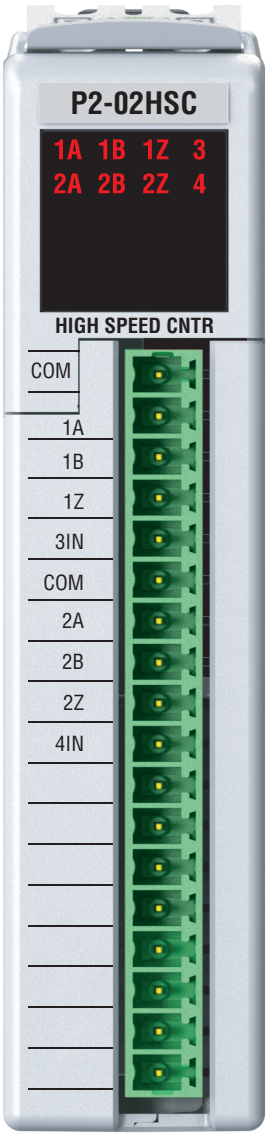

Terminal block not included. Order P/N P2-RTB or P2-RTB-1.

Input Specifications	
Inputs per Module	Single ended Counter Inputs (6pts: 1A, 1B, 1Z, 2A, 2B, 2Z) General-purpose Inputs (3IN, 4IN)
Rated Voltage	5–24 VDC
Operating Voltage Range	4.25–27.6 VDC
Input Current	1.5 mA typical @ 4.25 VDC 11mA maximum @ 27.6 VDC
Input Impedance	2.5 kΩ
Minimum ON Current	1mA
Maximum OFF Current	0.4 mA
Minimum ON Voltage	4.5 VDC
Maximum OFF Voltage	2.2 VDC
OFF to ON, ON to OFF Response	2µs
Minimum Direction Setup Time	20µs
Maximum Input Frequency	100kHz
Module Range	Target position range ±2.147 billion (32-bit signed integer)
Status Indicators Logic Side	8 points
Commons	2 (4 points/common)

Not Compatible with ZIPLink.
Warranty: Thirty-day money-back guarantee.
Two-year limited replacement. (See www.productivity2000.com for details).

NOTE: The most recent Productivity Suite software and firmware versions may be required to support new modules and new features.

Specialty Modules

P2-02HSC (cont'd)

General Specifications	
Operating Temperature	0º to 60ºC (32º to 140ºF)
I/O Points Used	None, mapped directly to tags in CPU
Storage Temperature	-20º to 70ºC (-4º to 158ºF)
Humidity	5 to 95% (non-condensing)
Altitude	2,000 meters max.
Pollution Degree	II
Environmental Air	No corrosive gases permitted
Vibration	IEC 60068-2-6 (Test Fc)
Shock	IEC 60068-2-27 (Test Ea)
Overvoltage Category	2
Field to Logic Side Isolation	1800VAC applied for 1 second
Insulation Resistance	>10MΩ @ 500VDC
Heat Dissipation	2400mW
Terminal Type (sold separately)	18-position removable terminal block Not supported by ZIPLink terminal modules.
Weight	93g (3.3 oz)
Agency Approvals	UL 61010-1 and UL 61010-2-201 File E139594, Canada and USA CE (EN 61131-2 EMC, EN 61010-1 and EN 61010-2-201 Safety)*

**Meets EMC and Safety Requirements. See the D.O.C. for details.*

Removable Terminal Block Specifications		
Part Number	***P2-RTB***	***P2-RTB-1***
Number of positions	18 screw terminals	18 push release terminals
Wire Range	30–16 AWG (0.051–1.31 mm²) Solid/stranded conductor 3/64 in (1.2 mm) insulation max. 1/4 in (6–7 mm) strip length	28–16 AWG (0.081–1.31 mm²) Solid/stranded conductor 3/64 in (1.2 mm) insulation max. 19/64 in (7–8 mm) strip length
Conductors	USE COPPER CONDUCTORS, 75ºC or equivalent.	
Screw Driver Width	0.1 in. (2.5 mm) maximum	NA
Screw Size	M2	N/A
Screw Torque	2.5 lb·in (0.28 N·m)	N/A

** Recommended screw driver: P/N TW-SD-MSL-1*

Specialty Modules

P2-02HSC (cont'd)

Wiring Diagrams

High Speed General Purpose Inputs

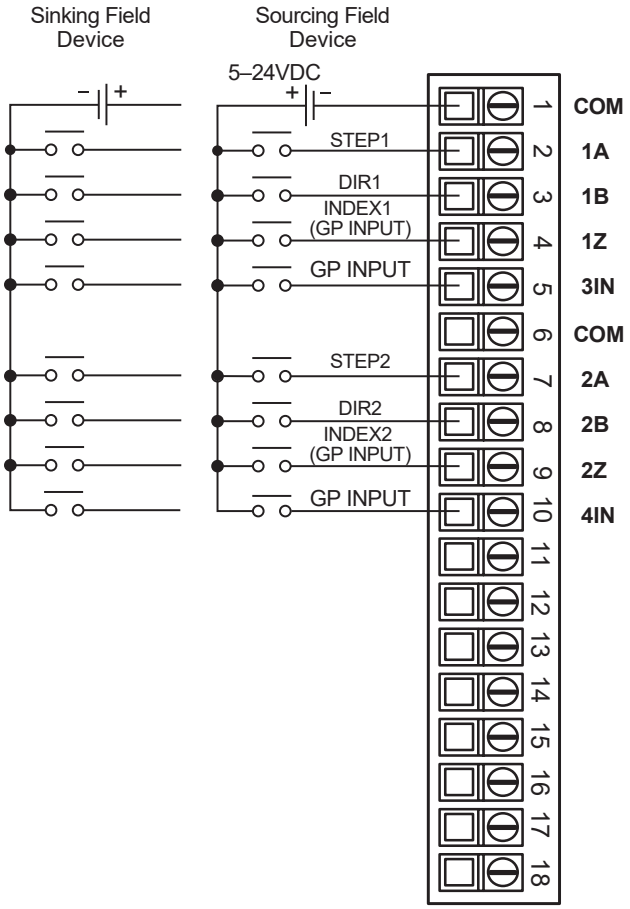

Equivalent Input Circuit

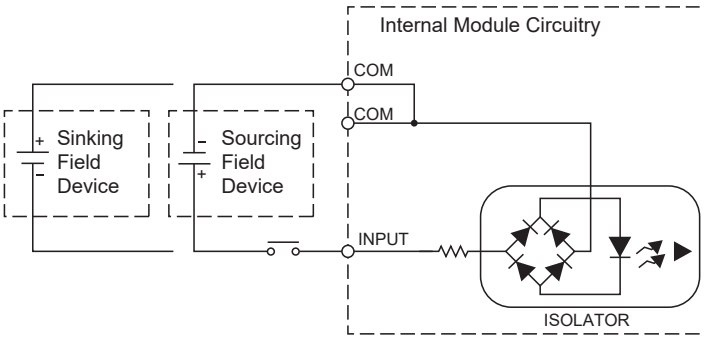

Specialty Modules

P2-02HSC (cont'd)

Wiring Example for Koyo Open Collector Output Encoder

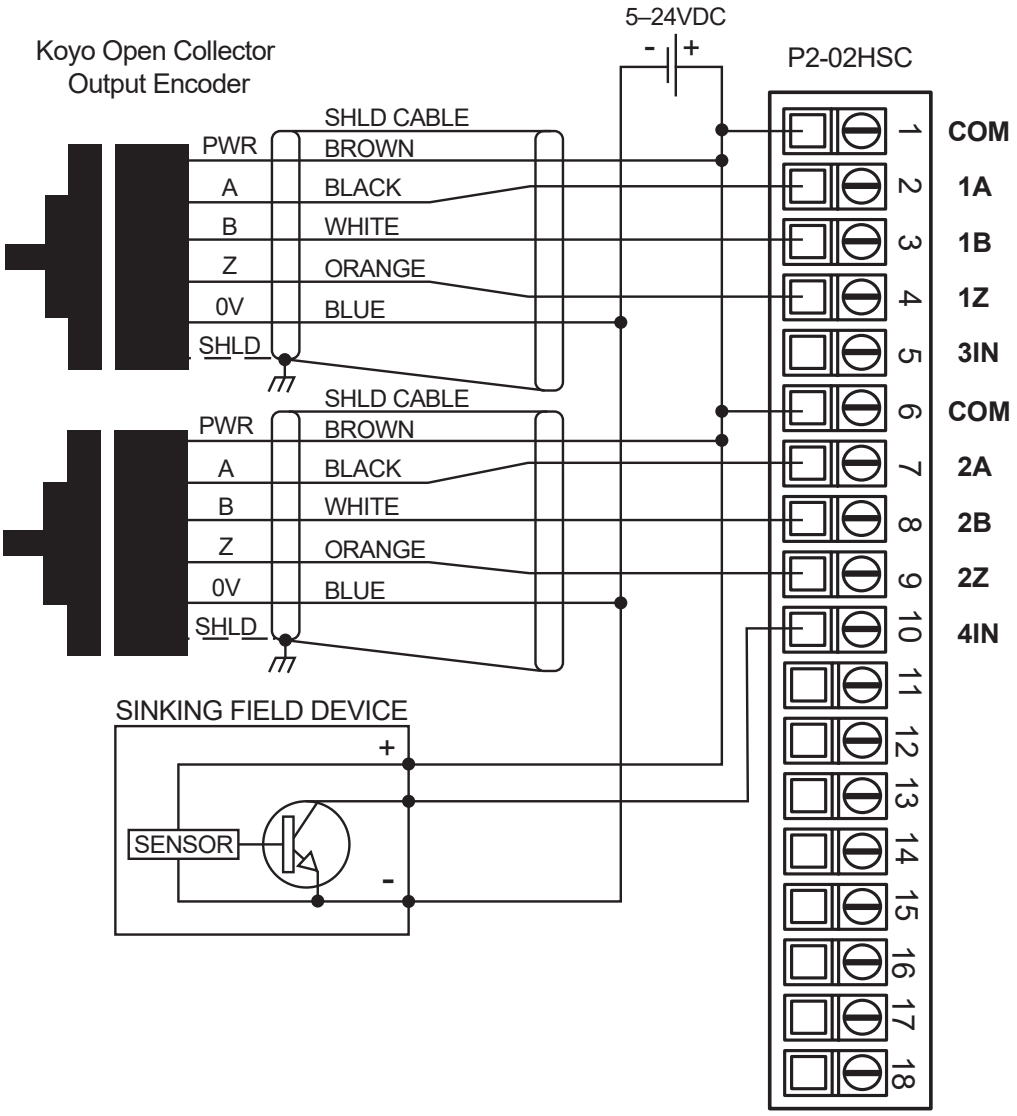

Line Driver Output Encoders Not Reccommended for P2-02HSC

Specialty Modules

P2-02HSC (cont'd)

Wiring Example for Koyo Totem Pole Output Encoder

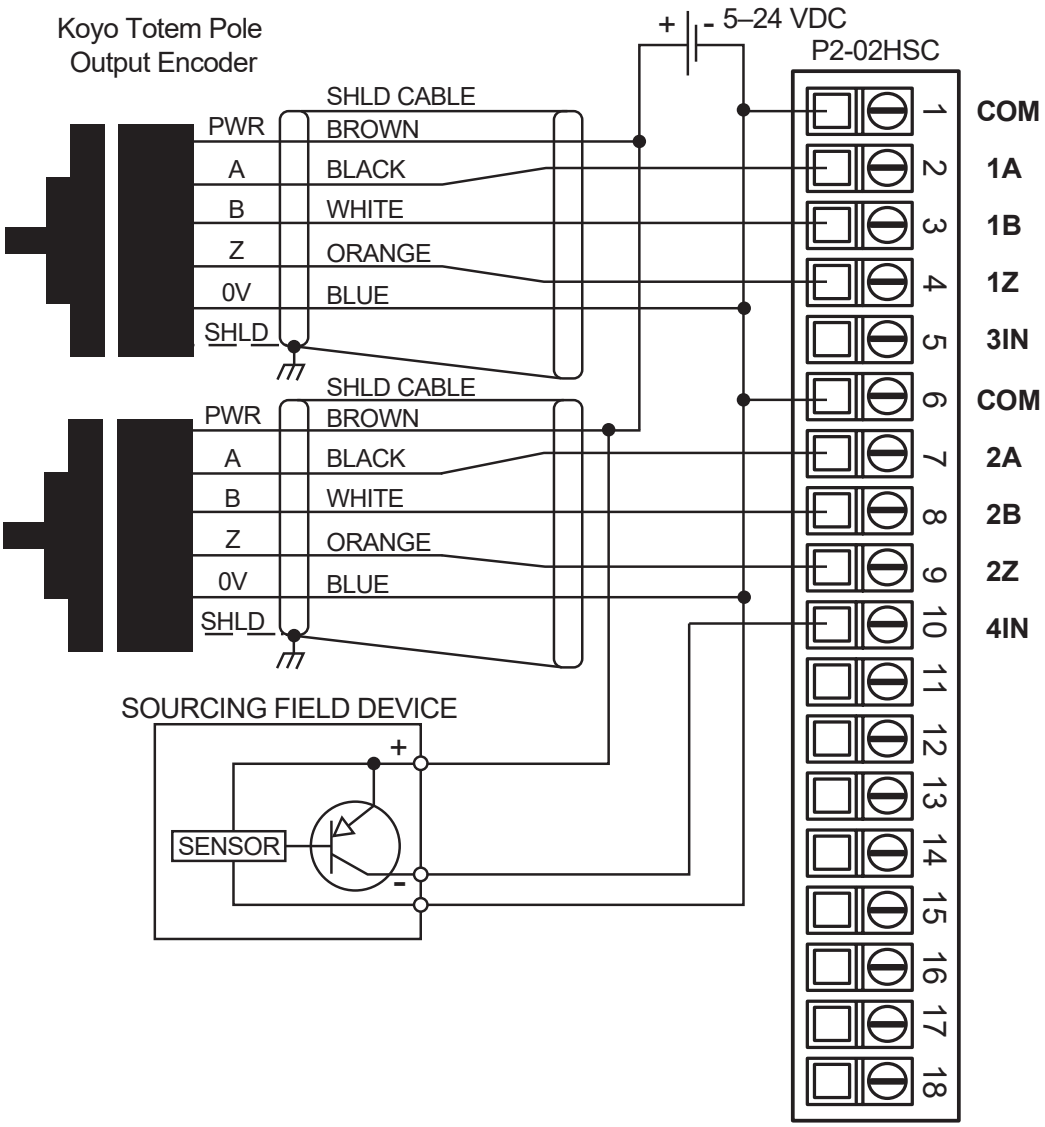

Specialty Modules

P2-04PWM $132.00

High-Speed Output

The P2-04PWM pulse width modulation module provides four channels of sinking or sourcing 0–20 kHz, 0–100% duty cycle outputs for use with the Productivity®2000 system.

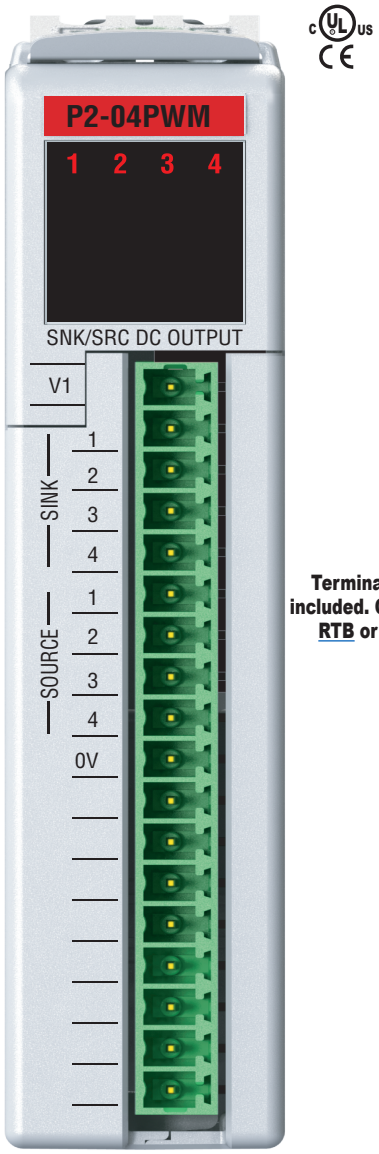

Terminal block not included. Order P/N P2-RTB or P2-RTB-1.

Output Specifications		
Outputs per Module	4 PWM outputs	
Output Type	Open drain N-CH MOSFET (sinking)	Open drain P-CH MOSFET (sourcing)
Rated Voltage	5–24 V	
Operating Voltage Range	4.75–28.8 V	
Maximum Output Current ***Only Sinking Load*** ***Only Sourcing Load*** ***Both Sinking and Sourcing Loads***	 200mA 0mA 100mA	 0mA 200mA 100mA
Minimum Load Current	5mA @ 5V	
Maximum Leakage Current	0.1 mA @ 28.8 V	
On Voltage Drop	0.6 V @ 50mA 1V @ 200mA	0.8 V @ 50mA 1.7 V @ 200mA
Maximum Inrush Current	500mA for 50ms	
Maximum Frequency Inaccuracy	0.5% of range	
Maximum Duty Cycle Inaccuracy	0.6% of range below 10kHz 1.2% of range 10–20 kHz	
Maximum Load Resistance for Stated Accuracy	1kΩ	
Accuracy vs. Temperature	±50PPM max.	
Start/Stop PWM Response	2ms	
PWM Frequency	0–20 kHz	
PWM Duty Cycle	0–100% below 10kHz 5–95% 10–20 kHz	
Status Indicators	Logic Side 4 points	
Commons	1 non-isolated	
Maximum Applicable Fuses	1A	
External Power Supply Required	5–24 VDC @ 40mA, Class 2	

Power Specifications	
Maximum Voltage	28.8 V
Minimum Voltage	4.75 V
Current Consumption Excluding Outputs	40mA
Maximum Current Consumption Total for 4 sink or 4 source Outputs	800mA

NOTE: The most recent Productivity Suite software and firmware versions may be required to support new modules and new features.

We recommend using pre-wired ZIPLink cables and connection modules. See "Wiring Solutions". If you wish to hand-wire your module, removable terminal blocks are sold separately. Order part number P2-RTB or P2-RTB-1.

Specialty Modules

P2-04PWM (cont'd)

General Specifications	
Operating Temperature	0º to 60ºC (32º to 140ºF)
I/O Points Used	None, mapped directly to tags in CPU
Storage Temperature	-20º to 70ºC (-4º to 158ºF)
Humidity	5 to 95% (non-condensing)
Environmental Air	No corrosive gases permitted
Vibration	IEC 60068-2-6 (Test Fc)
Shock	IEC 60068-2-27 (Test Ea)
Field to Logic Side Isolation	1800VAC applied for 1 second
Insulation Resistance	>10MΩ @ 500VDC
Heat Dissipation	2200mW
Field Wiring	Use ZIPLink wiring system or removable terminal block (sold separately). See "Wiring Solutions".
Terminal Type (Sold Separately)	18-position removable terminal block
Weight	95g (3.4 oz)
Agency Approvals	UL 61010-1 and UL 61010-2-201 File E139594, Canada and USA CE (EN 61131-2 EMC, EN 61010-1 and EN 61010-2-201 Safety)*

** Meets EMC and Safety requirements. See CE Declaration of Conformance for details.*

Removable Terminal Block Specifications		
Part Number	***P2-RTB***	***P2-RTB-1***
Number of Positions	18 screw terminals	18 spring clamp terminals
Wire Range	30–16 AWG (0.051–1.31 mm²) Solid / stranded conductor 3/64 in. (1.2 mm) Insulation Max. 1/4 in. (6–7 mm) strip length	28–16 AWG (0.081–1.31 mm²) Solid / stranded conductor 3/64 in. (1.2 mm) Insulation Max. 19/64 in. (7–8 mm) strip length
Conductors	USE COPPER CONDUCTORS, 75°C or equivalent.	
Screw Driver	0.1 in. (2.5 mm) maximum*	
Screw Size	M2	N/A
Screw Torque	2.5 lb·in (0.28 N·m)	N/A

** Recommended screw driver: P/N TW-SD-MSL-1*

Specialty Modules

P2-04PWM (cont'd)

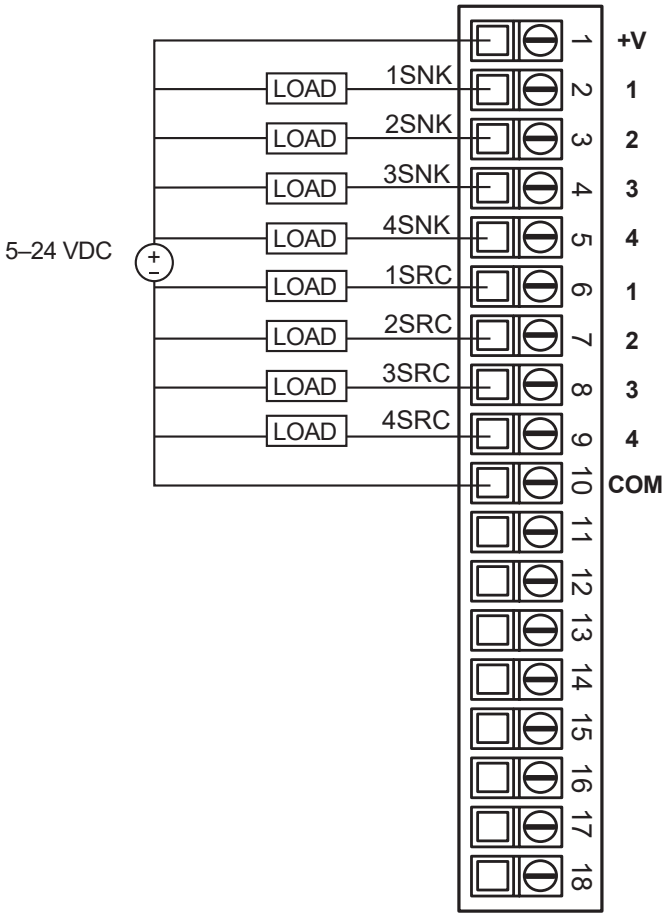
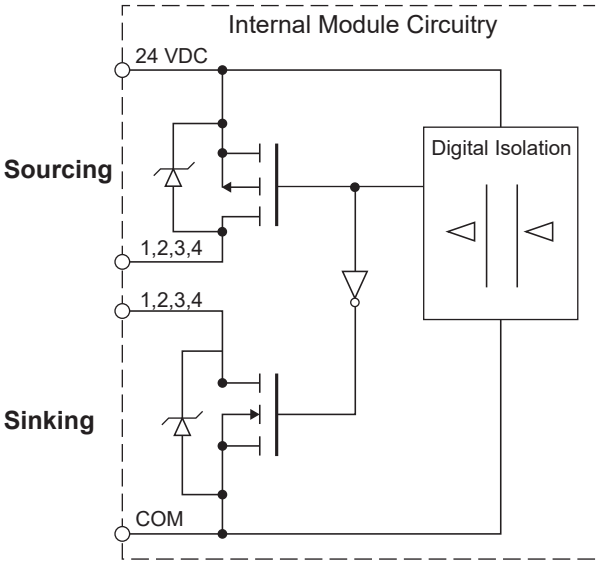
NOTE: Both channels (sinking/sourcing) output the same frequency and duty cycle that is assigned to the tag in Hardware Configuration window.