DL305 Family of Products

DL305 system example with serial communications network and operator interface

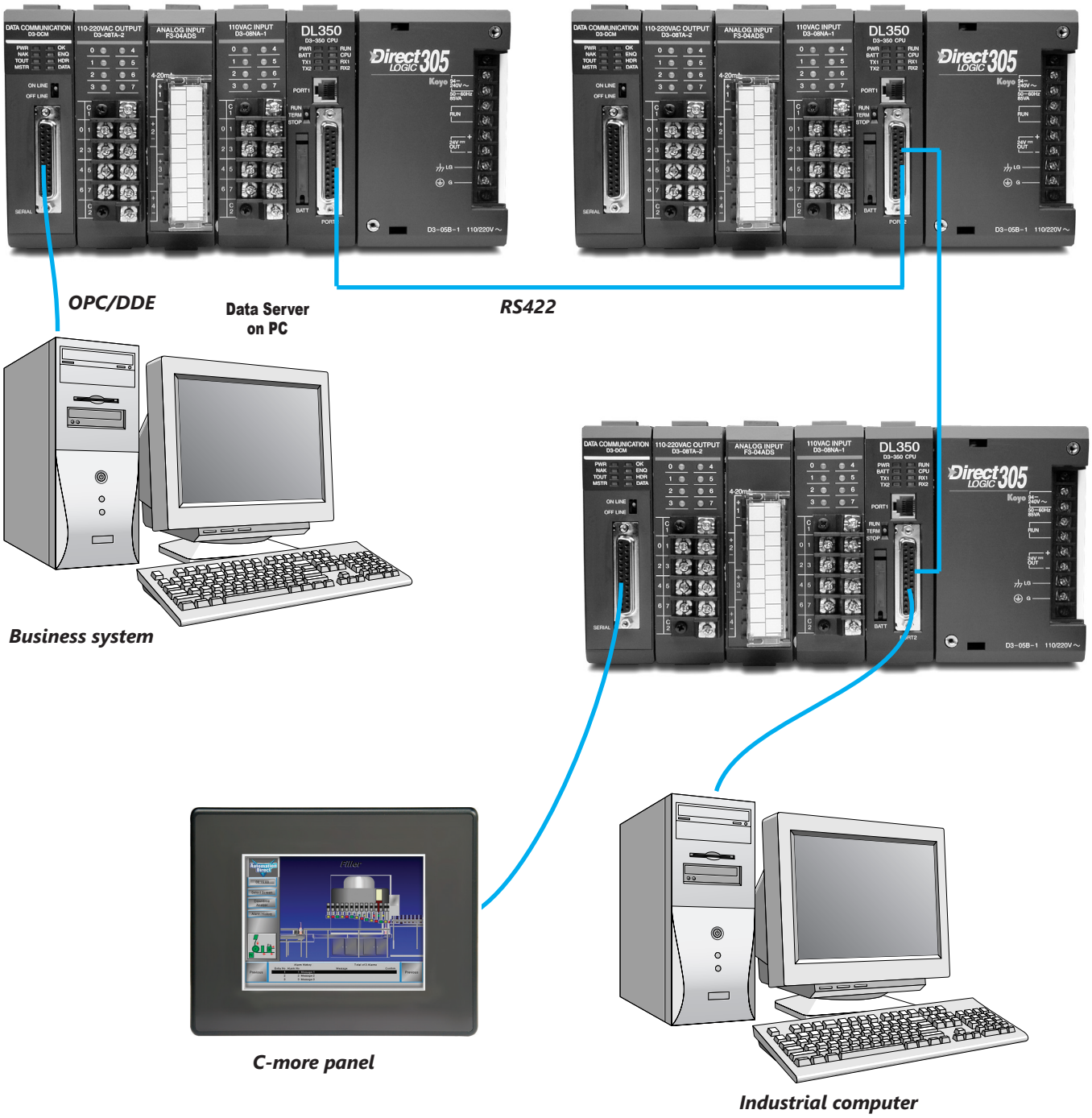

DL305 Family of Products

The following is a quick summary of the DL305 family of products. The DL305 products have been sold by previous vendors under a wide variety of part numbers. A complete list of product offerings with vendor cross-reference is available in the DL305 price list.

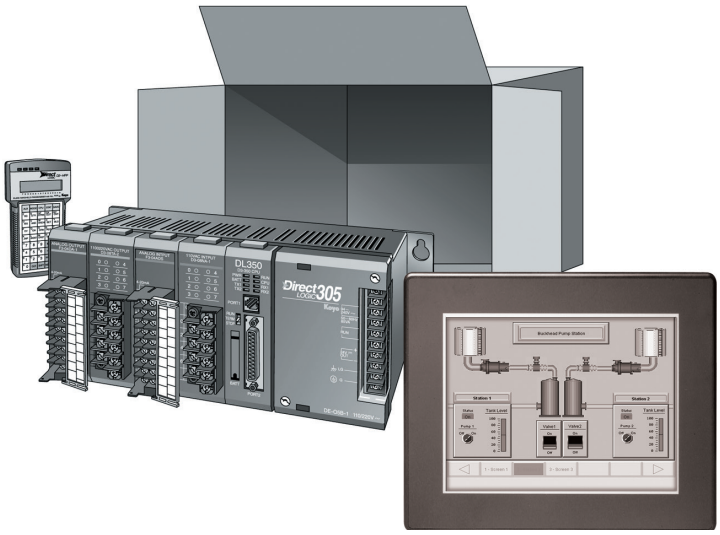

CPUs

D3-350 is discontinued. Please consider the Productivity, BRX, or CLICK Systems.

Specialty CPUs

F3-OMUX-2
- Serial interface to Optomux host
- 2 communication ports (RS422/485)

F3-PMUX-1
- Parallel interface to Pamux host

Bases

All DL305 bases have been retired. Please consider the Productivity, BRX, or CLICK Systems.

Analog modules

- 4 Channel IN, 12-bit, isolated
- 8 Channel IN, 12-bit
- 8 Channel thermocouple
- 16 Channel IN, 12-bit
- 4 Channel OUT 12-bit
- 4 Channel OUT 12-bit (isolated)

Discrete input modules

DC Input
- 16-pt. 5V/12-24 VDC (sink/source,1ms response)

AC/DC Input
- 8-pt. 24VAC/DC

Discrete output modules

DC Output
- 4-pt. 5–24 VDC sink
- 8-pt. 5–24 VDC sink
- 8-pt. 5–24 VDC source
- 16-pt. 5–24 VDC sink
- 16-pt. 5–24 VDC source

AC Output
- 4-pt. 110-220 VAC isolated
- 8-pt. 110VAC isolated
- 8-pt. 110-220 VAC isolated
- 16-pt. 15-220 VAC

RELAY Output
- 8-pt. 5.0 A/pt
- 8-pt. 4.0 A/pt isolated
- 8-pt. 10.0A/pt isolated

Specialty modules

- 8 pt. Input Simulator
- Filler Module

Programming

Handheld programmer: D2-HPP $590.00
D2-HPP Handheld Programmer with built-in RLLPLUS for D3-350

DirectSOFT Programming for Windows (PC-DSOFT6)

PC-DSOFT6	$462.00
PC-DS100	Free
PC-R60-U (upgrade)	$291.00

DIN rail mounted terminal blocks

See the Connection Systems section for over 200 available options.

Communications

- Data Comm Module, 350 CPU only

Operator panels

See the Operator Interface section for a complete listing of all types of panels and software.

Connection systems

See the Wiring Solutions section in this catalog for information on DIN*nector* terminal blocks, ***ZIP***Link connection systems and other connection accessories for use with the DL305 system.

D3-350 CPU, D3-05BDC, and D3-10BDC bases have been retired. Please consider integrating to our Productivity, BRX, or CLICK PLC systems.

DL305 Specialty CPUs

Your application may require an unconventional PLC solution. For instance, you may need computer-controlled I/O (the PLC I/O is controlled directly by your personal computer), or maybe you would like a PLC that executes a control program written entirely in BASIC instead of RLL. AutomationDirect offers three specialty CPUs that provide solutions for each of these applications.

Computer I/O CPUs

Two CPUs are available for the DL305 family that allow DL305 I/O (with DL305 bases) to function as computer-controlled I/O. The CPUs (F3-OMUX-2 and F3-PMUX-1) are similar in functionality, but offer different communication options. Each CPU allows DL305 modules of most types (see restrictions on types) to interface with a host computer. The entire control program for the DL305 I/O is executed on the host computer, which uses an OPTOMUX or PAMUX driver.

The following table shows the various features found on the DL305 specialty CPUs.

F3-OMUX-n	
Communication port specifications	
Interface	F3-OMUX-2: RS422/485 (isolated)
Connector	Two 9-pin D-sub sockets (female)
Baud Rate	Port 1: 300, 1200, 2400, 4800, 9600, 9200, 38400, 57600, 115200 Port 2: 9600
Protocol	OPTO 22 serial communications
F3-PMUX-1	
Communication port specifications	
Interface	Parallel
Connector	50-pin ribbon cable connector
Protocol	OPTO 22 parallel communications

I/O module restrictions

The specialty CPUs can make use of almost all DL305 modules, but they do not support the D3-HSC, or D3-02DA modules.

F3-OMUX-2 $1,019.00

The F3-OMUX-2) CPU plugs into the first slot of a DL305 base. It acts as a serial interface to the control program in the host computer and up to 184 DL305 I/O per CPU. Multiple CPUs can be daisy-chained together to increase I/O count. The host computer must use an OPTOMUX serial communication driver. The host can execute a custom program or use a standard software package that supports OPTOMUX drivers such as Intouch-Wonderware, Iconics-Genesis, U.S. Data FactoryLink, Metra-Skyhawk Lt, etc.

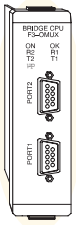

General Specifications

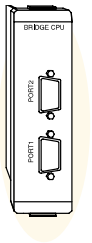

- Two serial ports that support the OPTOMUX protocol

F3-OMUX-2

- RS422/RS485 (isolated)
- Max of 184 I/O points per CPU (with expansion base unit)
- Scan time is dependent on the communication speed, number of commands sent, type of commands sent, the size of the response and the speed of the host computer.

F3-PMUX-1 $770.00

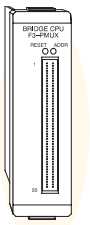

The F3-PMUX is similar in operation to the F3-OMUX (-1, -2). It uses a parallel interface instead of serial interface. As a result, it requires the host computer to use a PAMUX communication board (OPTO 22 part number AC28 or equivalent). With this board, you can use PAMUX communication drivers in your host software. Scan time constraints are similar to the OMUX units.

The –1 version has a 26Mhz processor and replaces the F3-PMUX CPU.

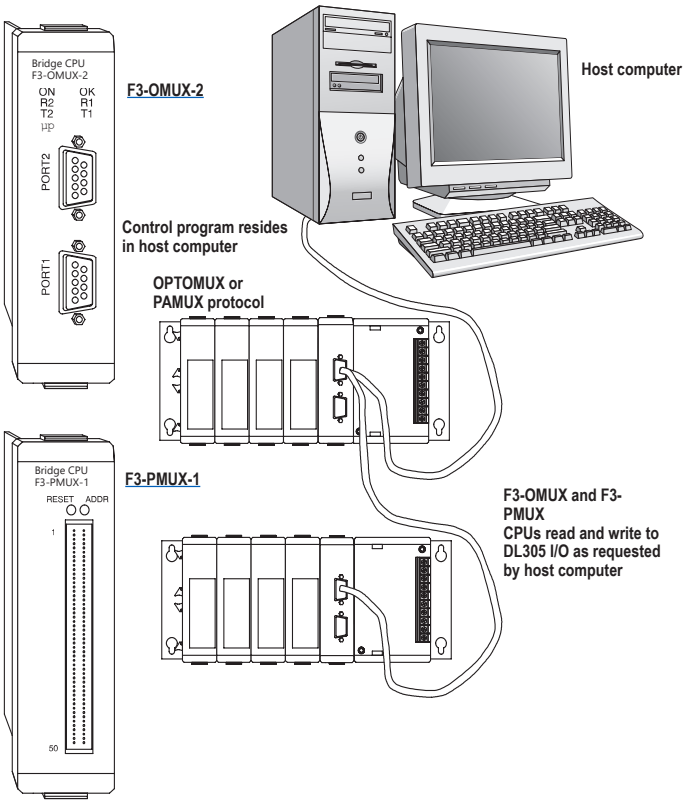

Communications

Determine your communications requirements

The choice of CPU can have a big impact on your communications capabilities in the DL305 family. If you are considering doing any communications, you should use the D3-350 CPU.

Standard communications

The D3-350 CPU offers two built-in RS232C communication ports. Operator interfaces and DirectSOFT can be connected to either port. On the D3-350 CPU, the handheld programmer is attached to Port 1. The handheld programmer can be operated simultaneously with the communication ports. Port 1 on the D3-350 is fixed. Port 2 can be configured using the handheld programmer or DirectSOFT.

DL305 as a server on a network

Both ports on the D3-350 CPU can serve as server ports for DirectNET. The bottom ports offer additional flexibility in that they can serve as a Server on a Modbus RTU network. The D3-350 even supports RS422, so no RS232-to-RS422 converter is needed. No programming is required in these CPUs for them to act as Server ports.

DL305 as a network client

The bottom built-in communication port of the D3-350 CPU can serve as a Network Client for DirectNET. Up to 90 Server stations can be addressed. The D3-350 can also serve as a MODBUS RTU Client; up to 247 Server stations can be addressed. DL405, DL305 and DL205 controllers can be used as Server stations.

Network Addresses		
Port	***Protocol***	***Range***
1	***Server***	***1-90***
2	Server	1-90
	Client	0
	MODBUS/RTU	1-247

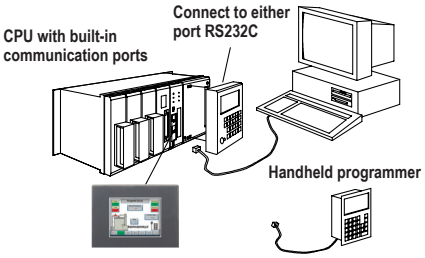

Custom drivers

The DL305 product family supports the DirectNET protocol. However, in some applications you may have a need to connect to a device that does not support this protocol. If so, the ASCII/BASIC modules also allow you to write your own custom communication drivers (in BASIC) to connect to special devices. These high-speed modules offer communication rates up to 115.2K baud on RS232C, RS422, and RS485. With 128K of memory, there is ample program or data storage space. (These modules are not supported by the D3-350.)

I/O Selection

Choose your I/O modules

There are three major factors to consider when choosing an I/O module:

Environmental specifications:
What environmental conditions will be present?

Hardware specifications:
Does this product have the right features, performance and capacity to adequately serve the application?

Field termination:
How does this module connect to field devices? For DC modules, is a sinking or sourcing module required?

Review I/O hardware specifications

The hardware specifications for every DL305 module are listed with each module. Discrete module specifications are shown in a format similar to the example to the right. Take time to understand the specification chart, the derating curve and the wiring diagram.

Specialty module specifications are shown in a format that is relevant for each particular module. These module specifications should help you determine if this module is right for your application.

Environmental specifications

The adjacent table lists the environmental specifications that globally apply to the DL305 system (CPU, Bases, and I/O modules). Be sure the modules you choose are operated within these environmental specifications.

General I/O Module Specifications	
Specification	***Rating***
Storage Temperature	4°F – 158°F (-20°C to 70°C)
Ambient operating temperature	32°F – 140°F (0° to 60°C)
Ambient humidity	5% - 95% relative humidity (non-condensing)
Vibration resistance	MIL STD 810C, Method 514.2
	Shifting: 0.075 mm 10–57 Hz 3 axes
	Acceleration: 9.8 m/s2 57–150 Hz 3 axes
	Sweeping: 810C, Method 516.2
Peak accel	147 m/s2 11ms, 3 axes
Noise immunity	NEMA (ICS3-304)
Atmosphere	No corrosive gases

I/O Selection

Factors affecting field termination

Sinking and sourcing for DC field devices: If you are using a DC type of field device, then you should consider whether the device is a sinking or sourcing configuration. This may affect your module selection since it determines the manner in which the device must be wired to the module. (Both sinking and sourcing modules are available.) Refer to the sinking/sourcing section of the Appendix for a complete explanation of how this could affect your system.

Physical wire terminations: In general, DL305 modules use five types of field terminations. They include: removable terminal blocks (included on most 8 and 16-point modules), fixed terminal blocks; specialty D-sub connectors (used on a few 16-point modules), standard D-sub connectors (used on most specialty intelligent modules), and phone jack style (used on some specialty modules and the universal cable kit). The module descriptions indicate the connector type that is on the module. The following illustrations shows these types of connectors. You can also use our DIN rail-mounted terminal blocks, DIN*nectors*, or ***ZIP***Link cables as a field termination interface to the PLC and I/O modules.

Choose your modules

Now that you understand the factors that affect your choice of an I/O module, it's time to choose ones that best suit your needs. When you have selected the modules, proceed to the next section to choose an I/O configuration scheme that best suits your application.

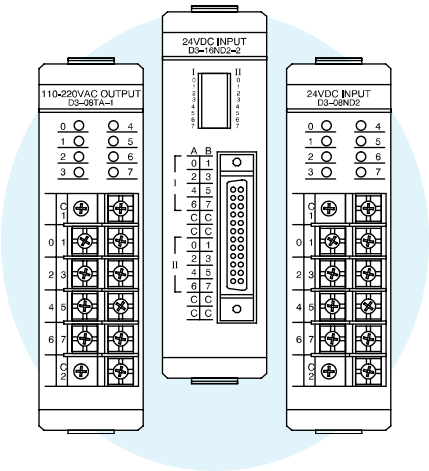

ZIPLink Connection System

If your application requires a lot of relay outputs, consider using the ZipLink AC or DC relay output modules. These modules can switch high current (10A) loads without putting a load on your base power budget. Refer to the Terminal Blocks and Wiring Solutions section in this catalog for more information.

This logo is placed next to the I/O modules that are supported by the ***ZIP***Link connection systems. See the I/O module specifications at the end of this section.

Extra connectors or spare fuses

There are several types of spare parts that may be useful. A filler module provides a quick and easy way to cover empty slots. Or, it is sometimes helpful to have extra I/O module connectors or spare fuses. Also, keep in mind the DIN*nector* family of terminal blocks that provide DIN rail-mounted terminal blocks for simplifying and organizing your wiring needs.

- F3-FILL-CB – Filler module for empty slots $68.00
- D3-8IOCVR – 8pt. I/O terminal plastic covers $17.00
- D3-FUSE-4 – Fuses for D3-08TAS, D3-08TAS-1, F3-16TA-1 and F3-16TA –2 $23.00
- D3-FUSE-6 – Fuses for F3-08TRS-2 $23.00
- D3-ACC-3 – Spare terminal screws for 16pt. I/O modules $26.00

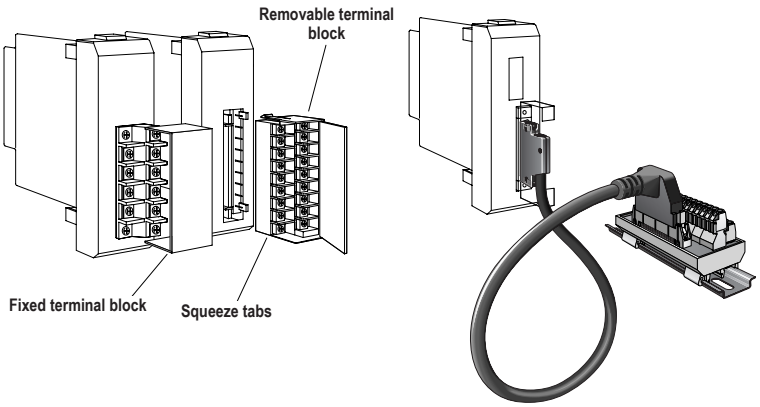

***ZIP*Links eliminate the tedious process of wiring PLC I/O terminal blocks.**

DL305 I/O Configuration

Local I/O – Local I/O are the modules that reside in the same base as the CPU. The status of each I/O point is updated on each I/O scan of the CPU.

Local expansion I/O – Most local CPU bases can be expanded to include expansion I/O. Local expansion is commonly used when there are not enough I/O points available in the existing base configuration or the power budget maximum for the existing base will be exceeded with the addition of I/O. This configuration requires an additional base(s) and an I/O expansion cable(s). The CPU treats the expanded I/O in the same manner as local I/O, with updates every CPU I/O scan. There are certain addressing restrictions that are related to expansion I/O.

Remote I/O – (D3-350 CPU) – Remote I/O is used when you need to place I/O bases at some remote distance from the CPU base. There are certain restrictions that are related to remote I/O. Check the catalog section on DL205 Remote I/O for examples and additional information.

I/O Configuration Limitations	D3-350	D3-350 with -1 bases (AC powered only)
5-slot Local CPU Base System	64 I/O max	64 I/O max
5-slot Local CPU Base System with a 5-slot Expansion Base	128 I/O max	144 I/O max
5-slot Local CPU Base System with two 5-slot Expansion Bases	128 I/O max	224 I/O max
10-slot Local CPU Base System	136 I/O max	144 I/O max
10-slot Local CPU Base System with a 5-slot Expansion Base	176 I/O max	224 I/O max
10-slot Local CPU Base System with a 10-slot Expansion Base	184 I/O max	304 I/O max

Note: The 16-point modules must be in the first eight slots adjacent to the CPU, rolling over into an expansion base if necessary.

Example of I/O system with expansion I/O

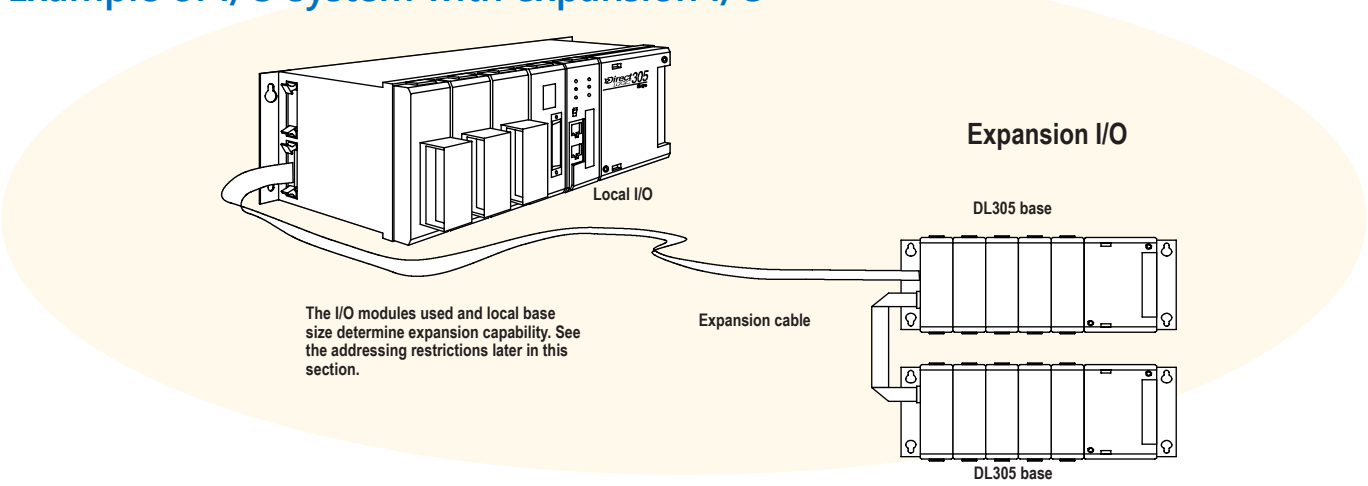

I/O Module Locations

The design of the DL305 has a long and successful history. Each time the product family has grown or been enhanced, compatibility with the earlier products has been preserved to protect customer investments. This has resulted in an I/O numbering system and I/O location scheme that has some special requirements.

The Module Placement Guideline table explains the rules that pertain to module location. Some specialty modules have additional requirements. These are explained in their respective module data sheets. Remember that the power budget will limit the location where some modules can be placed in a base.

Module Placement Guidelines	
Device	Placement
CPU	• The CPU must reside in the first slot of the local CPU base (closest to the power supply). • The CPU slot does consume an I/O slot. For example, a D3-05BDC 5-slot base has a slot for the CPU and 4 slots for I/O modules.
16 Point I/O Modules	A maximum of eight 16-point modules may be installed in a system. However, the actual number allowed depends on the type of CPU you are using. D3-350 - maximum of eight 16-pt. modules D3-350 - w/-1 base can have 16-pt. modules in all available slots
Note: some specialty modules, such as the High Speed Counter and Thumbwheel Interface Unit, require 16 points and are treated as 16-point modules. The 16-point modules must be in the first 8 slots adjacent to the CPU. They may roll over into an expansion base if necessary. If any of the 8 slots adjacent to the CPU are not used for 16-point modules, they can be used for 8-point modules.	
Analog	Analog modules must reside in any valid 16-point I/O module slot.
ASCII BASIC Modules	ASCII BASIC modules can be placed in any valid 16-point I/O slot. (D3-350 does not support these modules)
High Speed Counter	A High-Speed Counter must be used in the first four I/O module slots in the local CPU base. (D3-350 does not support these modules)

I/O Points Usage Table for Modules

The following table indicates the number of I/O points that are used by each module. Use this information to ensure your I/O configuration stays within the valid I/O count of your chosen CPU.

DC Input		***Relay Output***		***Analog***	
F3-16ND3F	16	***F3-08TRS-1***	8	***F3-04ADS***	16
		F3-08TRS-2	8	***F3-08AD-1***	16
AC/DC Input		***AC Output***		***F3-08THM-J***	16
D3-08NE3	8	***F3-08TAS-1***	8	***F3-08THM-K***	16
				F3-16AD	16
				F3-04DA-1	16

D3-350 Addressing

I/O addressing

When the I/O modules are installed in a 5-slot base and all expansion bases are also 5-slot bases, the addressing scheme is very simple. 16 I/O points are assigned to each slot. This applies even if the slot contains an 8-point module or if the slot is empty. Expansion base addresses follow in succession from the previous base. Input modules are assigned addresses X0 through X777. Output modules are assigned address Y0 through Y777.

5-slot base using 8-pt. I/O modules

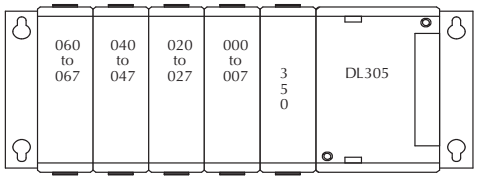

5-slot base using 16-pt. I/O modules

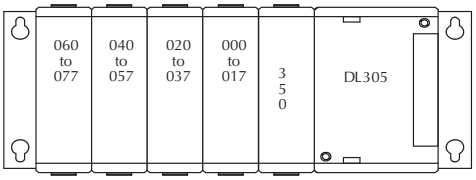

D3-350 CPU, D3-232-DCU, and all DL305 series bases have been retired. Please consider integrating to our Productivity, BRX, or CLICK PLC systems.

5-Slot Base Example Configurations

5-Slot bases

5-slot local
Total I/O: 64

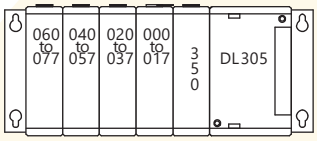

5-slot local and 5-slot expansions
Total I/O: 144

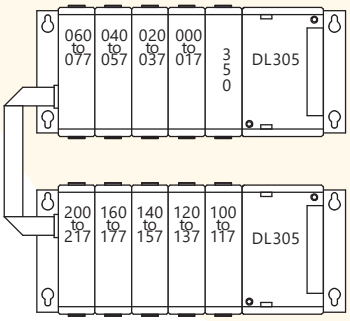

5-slot local and two 5-Slot expansions
Total I/O: 224

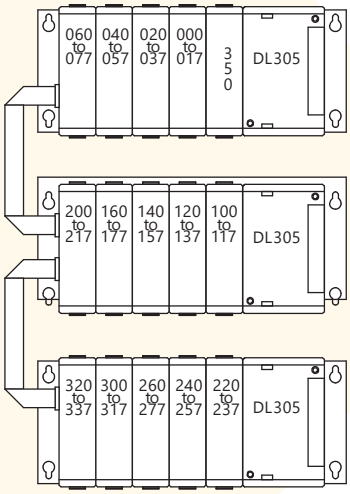

10-Slot Base Example Configurations

10-slot bases

10-slot local and 5 slot expansion
Total I/O: 224

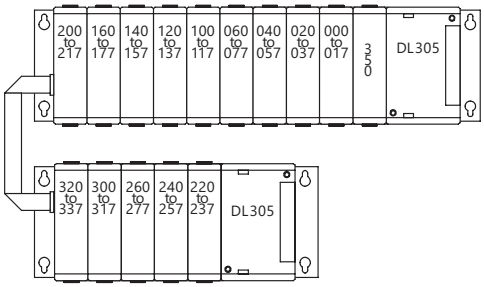

10 slot local and 10 slot expansion
Total I/O: 304

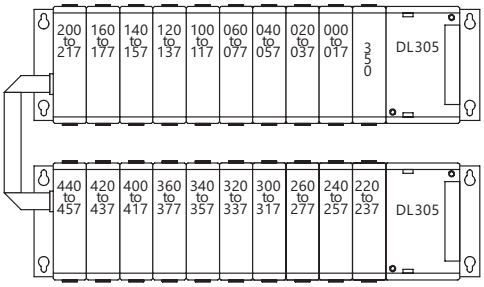

10 slot local
Total I/O: 144

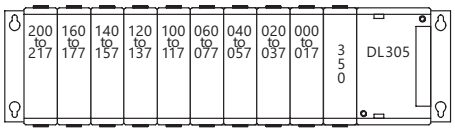

Power Budget

Managing your power resource

The I/O configuration depends on your choice of I/O modules, bases and I/O location. When determining the types and quantity of I/O modules you will be using, it's important to remember there is a limited amount of power available from the power supply.

The chart on the next page indicates the power supplied and used by each DL305 device. The adjacent chart shows an example of how to calculate the power used by your particular system. These two charts should make it easy for you to determine if the devices you have chosen fit within the power budget of your system configuration.

If the I/O you have chosen exceeds the maximum power available from the power supply, you can resolve the problem by shifting some of the modules to an expansion base.

***WARNING:** IT IS EXTREMELY IMPORTANT TO CALCULATE THE POWER BUDGET CORRECTLY. IF YOU EXCEED THE POWER BUDGET, THE SYSTEM MAY OPERATE IN AN UNPREDICTABLE MANNER, WHICH MAY RESULT IN A RISK OF PERSONAL INJURY OR EQUIPMENT DAMAGE.*

Example: How to calculate your power usage

The following example shows how to calculate the power budget for the DL305 system. The examples are constructed around a single 5-slot base using the devices shown. It is recommended you construct a similar table for each base in your DL305 system.

1. Using a chart similar to the one below, fill in column 2.
2. Using the tables on the opposite page, enter the current supplied and used by each device (columns 3, 4, and 5). Devices which fall into the "Other" category (Row D) are devices such as the Handheld Programmer or a Data Communication Unit, which also have power requirements, but do not directly plug into the base.
3. Add the current used by the system devices (columns 3, 4, and 5), starting with Slot 1, then put the total in the row labeled "Maximum Current Required" (Row E).
4. Subtract the row labeled "Maximum Current Required" (Row E), from the row labeled "Current Supplied" (Row B). Place the difference in the row labeled "Remaining Current" (Row F).
5. If "Maximum Current Required" is greater than "Current Supplied" in columns 3, 4 or 5, the power budget will be exceeded. It will be unsafe to use this configuration and you will need to restructure your I/O configuration.

Use *ZIP*Links to reduce power requirements

If your application requires a lot of relay outputs, consider using the ***ZIP***Link AC or DC relay output modules. These modules can switch high current (10A) loads without putting a load on your base power budget. Refer to the Wiring Solutions section in this catalog for more information.

This logo is placed next to I/O modules that are supported by the ZipLink connection systems. See the I/O module specifications at the end of this section.

Example of System Power Requirements Calculation

A	Column 1	Column 2	Column 3	Column 4	Column 5
	Base # 0	*Device Type*	*5 VDC (mA)*	*9VDC (mA)*	*24V(mA)*
B	*Current Supplied*				
	5-slot Base	D3-05BDC	1400	800	500
C	*Current Required*				
	CPU Slot	D3-350	500	0	0
	Slot 0	D3-16NE3	0	130	0
	Slot 1	D3-16NE3	0	130	0
	Slot 2	F3-08TAS-1	0	160	0
	Slot 3	F3-08TAS-1	0	160	0
D	*Other*				
	Handheld prog D2-HPP		200	0	0
E	Maximum Current Required		700	580	0
F	Remaining Current		700	220	500

DL305 Power Requirements

This section shows the amount of power supplied by the base power supplies and the amount of power used by each DL305 device. Note the base power supplies provide three internal voltages (5V, 9V, 24V). The chart shows how much power from each of these power sources is required for each DL305 device. Use this information when calculating the power budget for your system.

In addition to the three internal power sources, the DL305 bases provide an external power connection. There is 24VDC available from the 24VDC output terminals on the bases (except D3-05BDC and D3-10BDC).

The 24VDC can be used to power external devices or DL305 modules that require external 24VDC. The power used from this external 24VDC output reduces the internal system 24VDC that is available to the modules by an equal amount. When using the 24VDC output at the base terminal, it is recommended that 100mA not be exceeded.

Power Consumed				
Device	5V(mA)	9V(mA)	24V(mA)	Ext req.
CPUs				
D3-350	500	0	0	0
DC Input Modules				
F3-16ND3F	0	148	68	0
AC Input Modules				
AC/DC Input Modules				
D3-16NE3	0	130	0	0
AC Output Modules				
F3-08TAS-1	0	200	0	0

Power Supplied				
Device	5V(mA)	9V(mA)	24V(mA)	24 V (mA)
D3-05BDCD3- 10BDC	900 900	2000 2000	500 500	None None
Power Consumed				
Device	5V(mA)	9V(mA)	24V(mA)	External required
Relay Output Modules				
F3-08TRS-1 F3-08TRS-2	0 0	296 296	0 0	0 0
Analog Temperature and Thermocouple Modules				
F3-04ADS F3-08AD-1 F3-08THM-n F3-16AD F3-04DA-1	0 0 0 0 0	183 45 50 55 144	50 55 34 65 108	0 0 0 0 0
Communications and Networking				
Programming				
D2-HPP	200	0	0	0
Specialty CPUs				
F3-OMUX-1* F3-OMUX-2 F3-PMUX-1	409 262 455	0 0 0	0 150 0	0 0 0
Operator Interface				
C-more Micro-Graphic	210	0	0	0

* F3-OMUX-1 -As of 3/2021 CPU is no longer available.

Dimensions and Installation

It is important to understand the installation requirements for your DL305 system. This will help ensure that the DL305 products operate within their environmental and electrical limits.

Plan for safety

This catalog should never be used as a replacement for the user manual. The user manuals, D3-USER-M and D3-350-M (available for download from our web site), contain important safety information that must be followed. The system installation should comply with all appropriate electrical codes and standards.

Base dimensions and mounting orientation

Use the diagrams to the right to make sure the DL305 system can be installed in your application. DL305 bases must be mounted horizontally to ensure proper airflow for cooling purposes. It is important to check these dimensions against the conditions required for your application. For example, it is recommended that you leave 1.5" depth for ease of access and cable clearance. However, your distance may be greater or less. Also, check the installation guidelines for the recommended cabinet clearances.

Specification	Rating
Storage Temperature	-4°F - 158°F (-20°C to 70°C)
Ambient Operating Temperature	32°F - 131°F (0° to 55°C)
Ambient Humidity	30% - 95% relative humidity (non-condensing)
Vibration Resistance	MIL STD 810C, Method 514.2
Shock Resistance	MIL STD810, Method 516.2
Noise Immunity	NEMA (ICS3-304)

DL305 mounting depths

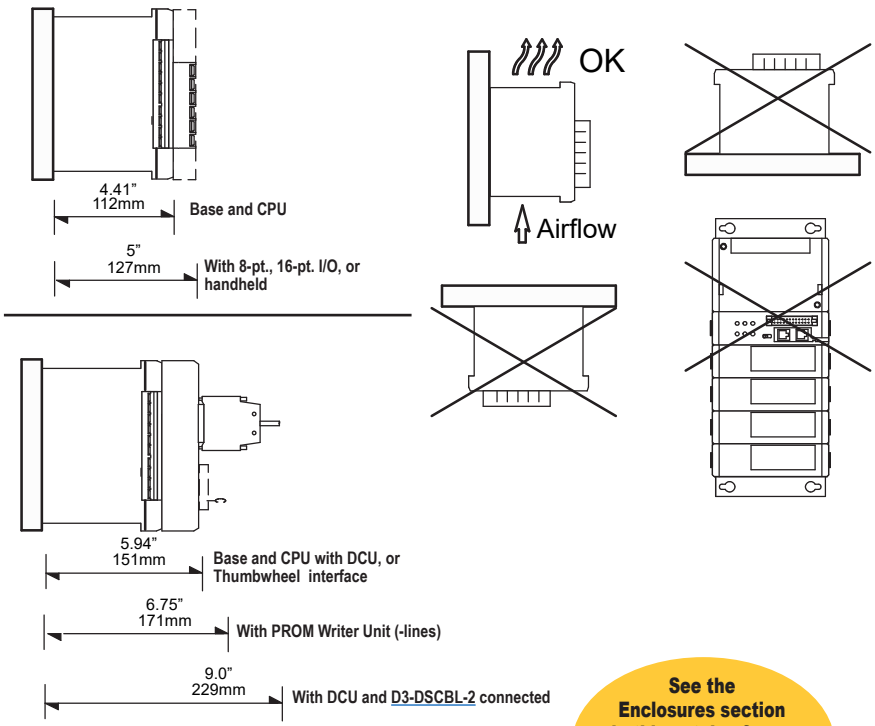

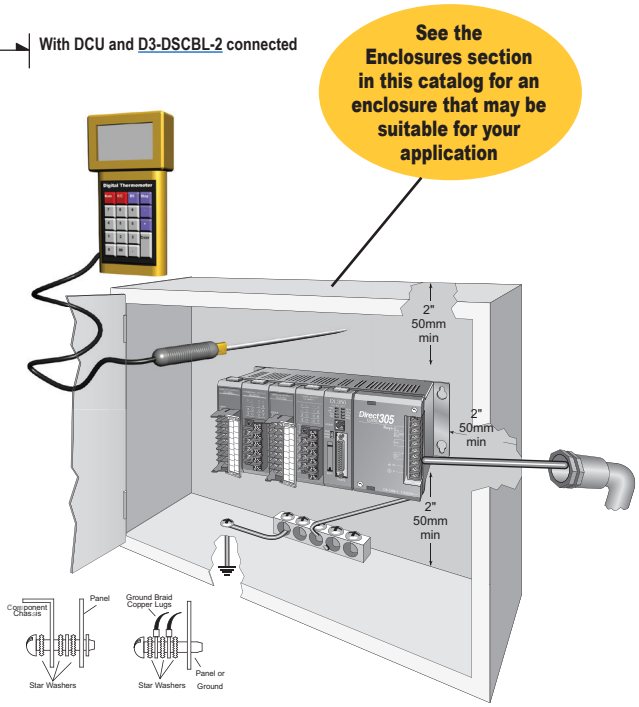

Wiring Solutions

Wiring Solutions using the *ZIP*Link Wiring System

ZIPLinks eliminate the normally tedious process of wiring between devices by utilizing prewired cables and DIN rail mount connector modules. It's as simple as plugging in a cable connector at either end or terminating wires at only one end. Prewired cables keep installation clean and efficient, using half the space at a fraction of the cost of standard terminal blocks.

There are several wiring solutions available when using the ***ZIP***Link System ranging from PLC I/O-to-***ZIP***Link Connector Modules that are ready for field termination, options for connecting to third party devices, GS, DuraPulse and SureServo Drives, and specialty relay, transorb and communications modules. Pre-printed I/O specific, adhesive label strips for quick marking of ***ZIP***Link modules are provided with ***ZIP***Link cables. See the following solutions to help determine the best ***ZIP***Link system for your application.

Solution 1: DirectLOGIC I/O Modules to ZIPLink Connector Modules

When looking for quick and easy I/O-to-field termination, a ***ZIP***Link connector module used in conjunction with a prewired ***ZIP***Link cable, consisting of an I/O terminal block at one end and a multi-pin connector at the other end, is the best solution.

Using the PLC I/O Modules to ***ZIP***Link Connector Modules selector tables located in this section,

1. Locate your I/O module/PLC.
2. Select a ***ZIP***Link Module.
3. Select a corresponding ***ZIP***Link Cable.

Solution 2: DirectLOGIC I/O Modules to 3rd Party Devices

When wanting to connect I/O to another device within close proximity of the I/O modules, no extra terminal blocks are necessary when using the ***ZIP***Link Pigtail Cables. ***ZIP***Link Pigtail Cables are prewired to an I/O terminal block with color-coded pigtail with soldered-tip wires on the other end.

Using the I/O Modules to 3rd Party Devices selector tables located in this section,

1. Locate your PLC I/O module.
2. Select a ***ZIP***Link Pigtail Cable that is compatible with your 3rd party device.

Solution 3: GS Series and DuraPulse Drives Communication Cables

Need to communicate via Modbus RTU to a drive or a network of drives?

ZIPLink cables are available in a wide range of configurations for connecting to PLCs and SureServo, SureStep, Stellar Soft Starter and AC drives. Add a ***ZIP***Link communications module to quickly and easily set up a multi-device network.

Using the Drives Communication selector tables located in this section,

1. Locate your Drive and type of communications.
2. Select a ***ZIP***Link cable and other associated hardware.

Wiring Solutions

Solution 4: Serial Communications Cables

ZIPLink offers communications cables for use with DirectLOGIC, CLICK, and Productivity3000 CPUs, that can also be used with other communications devices. Connections include a 6-pin RJ12 or 9-pin, 15-pin and 25-pin D-sub connectors which can be used in conjunction with the RJ12 or D-Sub Feedthrough modules.

Using the Serial Communications Cables selector table located in this section,

1. Locate your connector type
2. Select a cable.

Solution 5: Specialty ZIPLink Modules

For additional application solutions, ***ZIP***Link modules are available in a variety of configurations including stand-alone relays, 24VDC and 120VAC transorb modules, D-sub and RJ12 feedthrough modules, communication port adapter and distribution modules, and SureServo 50-pin I/O interface connection.

Using the ***ZIP***Link Specialty Modules selector table located in this section,

1. Locate the type of application.
2. Select a ***ZIP***Link module.

Solution 6: ZIPLink Connector Modules to 3rd Party Devices

If you need a way to connect your device to terminal blocks without all that wiring time, then our pigtail cables with color-coded soldered-tip wires are a good solution. Used in conjunction with any compatible ***ZIP***Link Connector Modules, a pigtail cable keeps wiring clean and easy and reduces troubleshooting time.

Using the Universal Connector Modules and Pigtail Cables table located in this section,

1. Select module type.
2. Select the number of pins.
3. Select cable.

PLC I/O Modules to ZIPLink Connector Modules - DL305

DL305 PLC Input Module *ZIP*Link Selector				
PLC		*ZIPLink*		
Input Module	*# of Terms*	*Component*	*Module Part No.*	*Cable Part No.*
F3-16ND3F	18	See Note 1		

DL305 PLC Analog Module *ZIP*Link Selector				
PLC		*ZIPLink*		
Analog Module	*# of Terms*	*Component*	*Module*	*Cable*
F3-04ADS	18	See Note 2		
F3-08AD-1	18			
F3-16AD	18			
F3-04DA-1	18			
F3-08THM-J	T/C Wire Only			

Note: See the Compatibility Matrix tables under the ***ZIP***Link Connector Modules catalog section.

DL305 PLC Output Module *ZIP*Link Selector				
PLC		*ZIPLink*		
Output Module	*# of Terms*	*Component*	*Module Part No.*	*Cable Part No.*
F3-08TAS-1	18	See Note 2		
F3-08TRS-1	18			
F3-08TRS-2	18			

1These I/O modules have non-removable terminal blocks which can be terminated using the ZL-CBL24-1P or 2P pigtail cable and the ZL-RTB20 module of the ZIPLink wiring system.
2 Module is not supported by the ZIPLink wiring system

DL305 System with *ZIP*Link Module and *ZIP*Link Cable

ZL-CBL24-1P

DC Input Modules

F3-16ND3F DC Fast Response Input $348.00	
Inputs per Module	16 sink/source (jumper selectable sink/source)*
Commons per Module	2 (internally connected)
Input Voltage Range	5VDC TTL and CMOS, 12–24 VDC (jumper selectable)*
Input Voltage Supplied	Internal (used with sinking loads) External (used with sourcing loads)
Peak Voltage	100VDC (35VDC Continuous)
AC Frequency	N/A
ON Voltage Level	3.5–5 VDC @ 5VDC 10–24 VDC @12–24 VDC
OFF Voltage Level	0–1.5 VDC @ 5VDC 0–4 VDC @ 12–24 VDC
Base Power Required	9V 148mA max 24V 69mA max
Input Current	1mA @ 5VDC 3mA @ 12-24 VDC
Input Impedance	4.7K
OFF to ON Response	1ms
ON to OFF Response	1ms
Maximum Input Rate	500Hz
Minimum ON Current	0.4 mA @ 5VDC 0.9 mA @ 12–24 VDC
Maximum OFF Current	0.8 mA @ 5VDC 2.2 mA @ 12–24 VDC
Terminal Type	Removable
Status Indicators	Logic side
Weight	5.4 oz. (153g)

Selection of operating mode

The DC power is provided by the rack power supply to sense the state of the inputs when jumpers are installed for sinking type signals. Sinking type inputs are turned ON by switching the input circuit to common. Source type input signals assume the ON state until the input device provides the voltage to turn the input OFF.

The mode of operation, either 5VDC or 12–24 VDC sink or source, for each group of circuits is determined by the position of jumper plugs on pins that are located on the bottom edge of the circuit board. There are four sets of pins (3 pins in each set), with two sets for each group of inputs. The first two sets of pins are used to configure the first 12 inputs (e.g. 0 to 7 and 100 to 103) and are labeled 12 CIRCUITS. Above the first set of pins are the labels 12/24 V and 5V. Above the second set of pins are the labels SINK and SRC (source). To select an operating mode for the first 12 circuits, place a jumper on the two pins nearest the appropriate labels. For example, to select 24VDC Sink input operation for the first 12 inputs, place a jumper on the two pins labeled 12/24 V and on the two pins labeled SINK. The last two sets of pins are used to configure the last 4 inputs (e.g. 104 to 107) and are labeled four CIRCUITS. The operating mode selected for the last group of four inputs can be different than the mode chosen for the first group of 12 inputs. Correct module operation required that each set of three pins have a jumper installed (four jumpers total).

*NOTE: When a group of inputs is used with TTL logic, select the SINK operating mode for that group. "Standard" TTL can sink several milliamps but can source less than 1mA.

See page tDL3-26 for part numbers of *ZIP*Link cables and connection modules compatible with this I/O module.

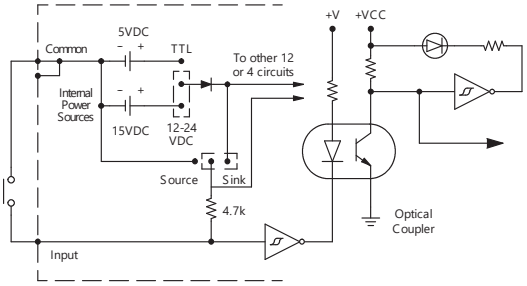

Jumper selected for 12–24VDC, sinking load configuration

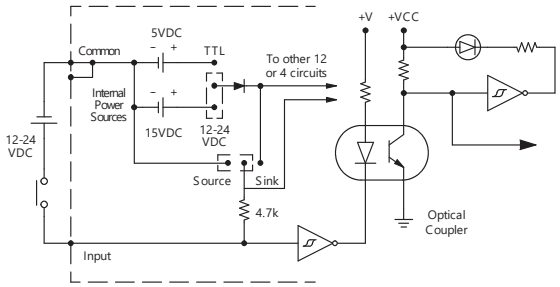

Jumper selected for sourcing load configuration.
An external power supply must be used in this configuration.

See Input Voltage Range

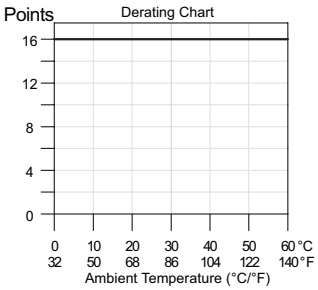

* 12 Inputs are jumper selectable for 5VDC/12–24VDC and Sink Load/Source Load

4 Inputs are jumper selectable for 5VDC/12–24VDC and Sink Load/Source Load

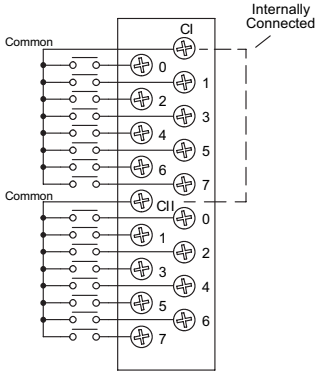

Sinking Load Configuration

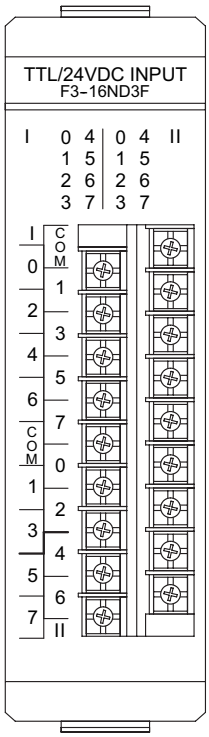

AC Output Modules

F3-08TAS-1 AC Output Retired	
Outputs per Module	8 (1500V point to point isolation)
Commons per Module	8 (isolated)
Operating Voltage	20–125VAC
Output Type	SSR (Triac with zero cross-over)
Peak Voltage	140VAC
AC Frequency	47–63 Hz
ON Voltage Drop	1.6 V(Rms) @ 1.5 A
Maximum Current	1.5A/point
Maximum Leakage Current	0.7 mA (Rms)
Max Inrush Current	15A for 20ms 8A for 100ms
Minimum Load	50mA
Base Power Required	9V 25mA/ON pt (200mA max), 24V N/A
OFF to ON Response	1ms max
ON to OFF Response	9ms max
Terminal Type	Removable
Status Indicators	Logic side
Weight	6.3 oz. (177g)
Fuses	8 (1 per common) 5A, 125V fast blow Order D3-FUSE-4 (5 per pack) $23.00

See page tDL3-26 for part numbers of *ZIP*Link cables and connection modules compatible with this I/O module.

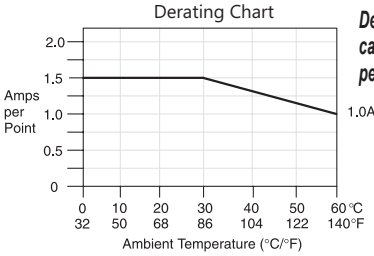

Derating Note: All outputs can be run at the current per point shown.

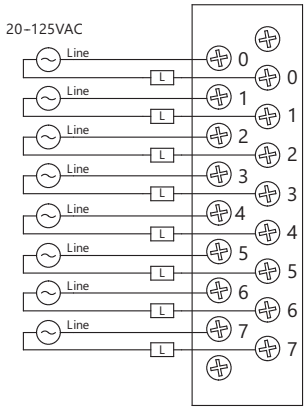

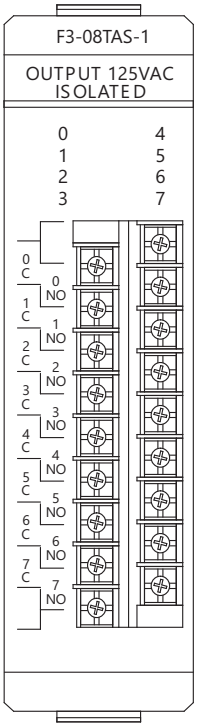

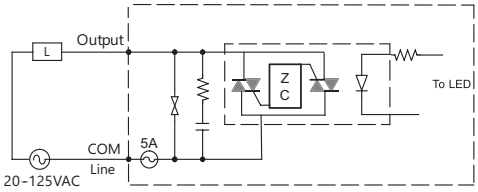

Relay Output Modules

F3-08TRS-1 Relay Output $298.00	
Outputs per Module	8
Commons per Module	8 (isolated)
Operating Voltage*	12–125 VAC 125–250 VAC (requires external fuses) 12–30 VDC
Output Type	6 Form A (SPST), 2 Form C (SPDT)
Max Current (resistive)	10A/point AC/DC, 32A/module AC/DC*
Max leakage Current	N/A
Max Inrush Current	10A inductive
Minimum Load	100mA @ 12VDC
Base Power Required	9V 37mA/ON pt., (296mA max), 24V N/A
OFF to ON Response	13ms max
ON to OFF Response	9ms max
Terminal Type	Removable
Status Indicators	Logic side
Weight	8.9 oz. (252g)
Fuses	8 fuses (10A, 125V), Non-replaceable
Peak Voltage	265VAC/120VDC
AC Frequency	47–63 Hz
ON Voltage Drop	N/A

** Caution: the ZIPLink wiring system is rated at 2 Amps per I/O point and 4 Amps per common, therefore the F3-08TRS-1 relay outputs are derated to 2 Amps per point and 4 Amps per common when used with the ZIPLink wiring system.*
Note: Maximum DC voltage rating is 120VDC at 0.5 Amp, 30,000 cycles typical.
Motor starters up to and including NEMA size 4 can be used with this module.

Typical Relay Life			
Max. Resistive or Inductive Inrush Load Current	***Operating Voltage***		
	28VDC	120VAC	240VAC
1/4HP		25K	
10.0 A	50K	50K	
5.0 A	200K	100K	
3.0 A	325K	125K	50K
0.5 A	> 50M		

See page tDL3-26 for part numbers of ZIPLink cables and connection modules compatible with this I/O module.

Note: When used with the ZIPLink wiring system, relay outputs are derated not to exceed 2 Amps per point max.

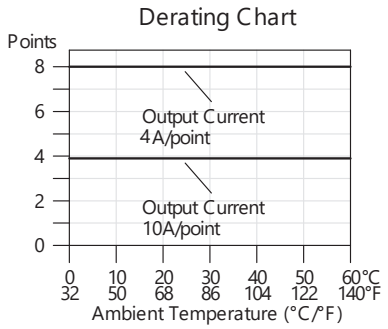

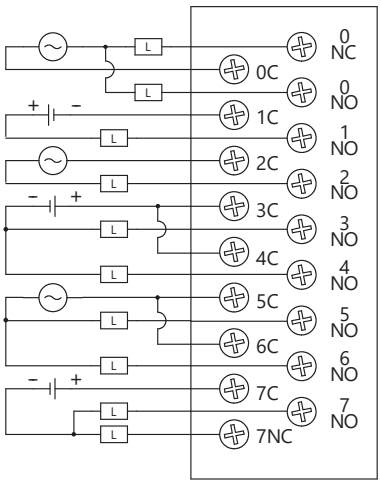

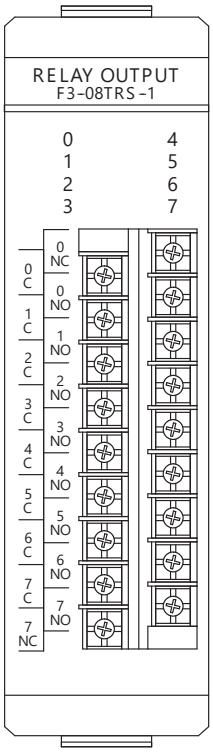

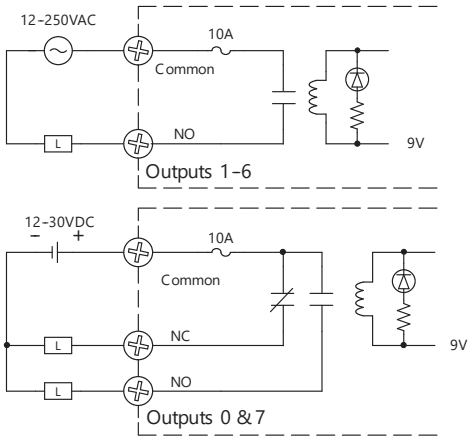

** Caution: the ZIPLink wiring system is rated at 2 Amps per I/O point and 4 Amps per common, therefore the D3-08TRS-1 relay outputs are derated to 2 Amps per point and 4 Amps per common when used with the ZIPLink wiring system.*

Relay Output Modules

F3-08TRS-2 Relay Output $318.00	
Outputs per Module	8
Commons per Module	8 (isolated)
Operating Voltage*	12–250VAC 12–30 VDC
Output Type	6 Form A (SPST), 2 Form C (SPDT)
Peak Voltage	265VAC/ 120VDC
AC Frequency	47–63 Hz
ON Voltage Drop	N/A
Max Current (Resistive)	4A/point AC/DC, 32A/module AC/DC*
Max Leakage Current	N/A

Max Inrush Current	10A inductive
Minimum Load	100mA @ 12VDC
Base Power Required	9V 37mA/ON pt. (296mA Max), 24V N/A
OFF to ON Response	13ms max
ON to OFF Response	9ms max
Terminal Type	Removable
Status Indicators	Logic side
Weight	9oz. (255g)
Fuses	8 fuses (10A, 125V), replaceable Order D3-FUSE-6 (5 per pkg.) $23.00 or use 19379-K-10A Wickman

** Caution: the ZIPLink wiring system is rated at 2 Amps per I/O point and 4 Amps per common, therefore the F3-08TRS-2 relay outputs are derated to 2 Amps per point and 4 Amps per common when used with the ZIPLink wiring system.*
Note: Maximum DC voltage rating is 120VDC at 0.5 Amp, 30,000 cycles typical.
Motor starters up to and including NEMA size 3 can be used with this module.

See page tDL3-26 for part numbers of *ZIP*Link cables and connection modules compatible with this I/O module.

Typical Relay Life			
Max. Resistive or Inductive Inrush Load Current	***Operating Voltage***		
	28VDC	120VAC	240VAC
5.0 A	200K	100K	
3.0 A	325K	125K	50K
0.5 A	>50M		

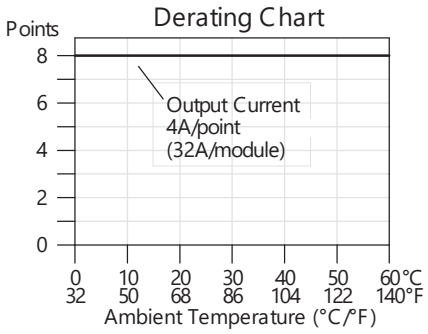

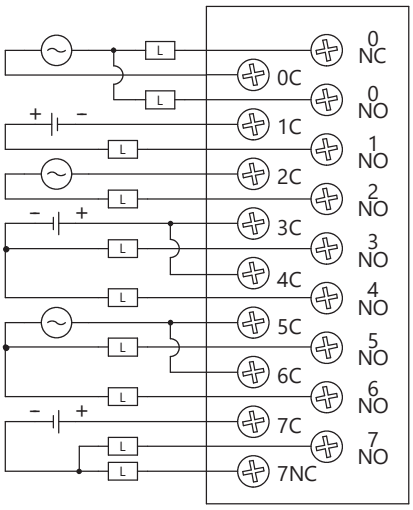

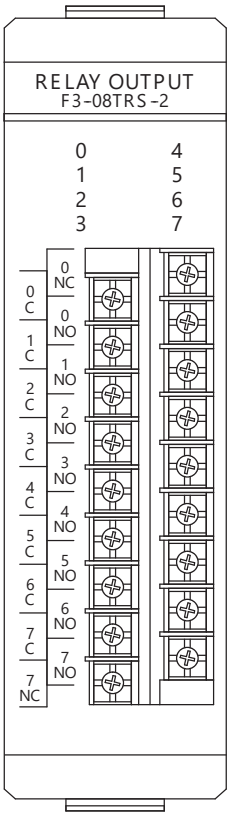

Expected mechanical relay life is 100 million operations.

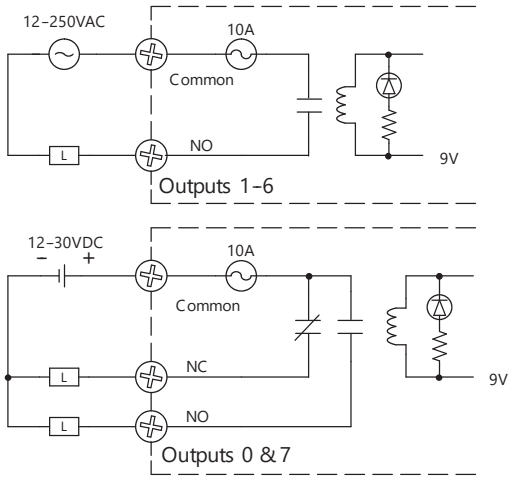

Analog Input Modules

F3-04ADS 4-Channel Isolated Analog Input $1,480.00	
Number of Channels	4, (isolated)
Input Ranges	0–5 V, 0–10 V, 1–5 V, ±5V, ±10V, 0–20 mA, 4–20 mA
Channels Individually Configured	Yes
Resolution	12 bit (1 in 4096)
Input Type	Differential
Max. Common Mode Voltage	±750V peak continuous transformer isolation
Noise Rejection Ratio	Common mode: -100dB at 60Hz
Active Low-pass Filtering	-3dB at 10Hz, -12dB per octave
Input Impedance	250Ω ± 0.1%, 1/2W current input, 200kΩ voltage input
Absolute Maximum Ratings	±40mA, current input ± 100V, voltage input
Conversion Time	1 channel per scan, successive approximation, AD574
Linearity Error	±1 counts max. (0.03% of full scale) unipolar ±2 counts max. (0.05% of full scale) bipolar
Full Scale Calibration Error	±8 counts maximum

Offset Calibration Error	±8 counts maximum
Accuracy vs. Temperature	57ppm/ ºC maximum full scale
Recommended Fuse	0.032 A, Series 217 fast-acting, current inputs
Power Budget Requirement	183mA @ 9VDC, 50mA @ 24VDC
External Power Supply	None required
Operating Temperature	32° to 140°F (-0° to 60°C)
Storage Temperature	-4° to 158° F (-20° to 70°C)
Relative Humidity	5 to 95% (non-condensing)
Environmental Air	No corrosive gases permitted
Vibration	MIL STD 810C 514.2
Shock	MIL STD 810C 516.2
Noise Immunity	NEMA ICS3-304

See page tDL3-26 for part numbers of *ZIP*Link cables and connection modules compatible with this I/O module.

Note 1: Connect unused voltage or current inputs to 0VDC at terminal block or leave current jumper installed (see Channel 3).
Note 2: A Series 217, 0.032A, fast-acting fuse is recommended for 4–20 mA current loops.
Note 3: Transmitters may be 2, 3, or 4 wire type.
Note 4: Transmitters may be powered from separate power sources.
Note 5: Terminate all shields of the cable at their respective signal source.

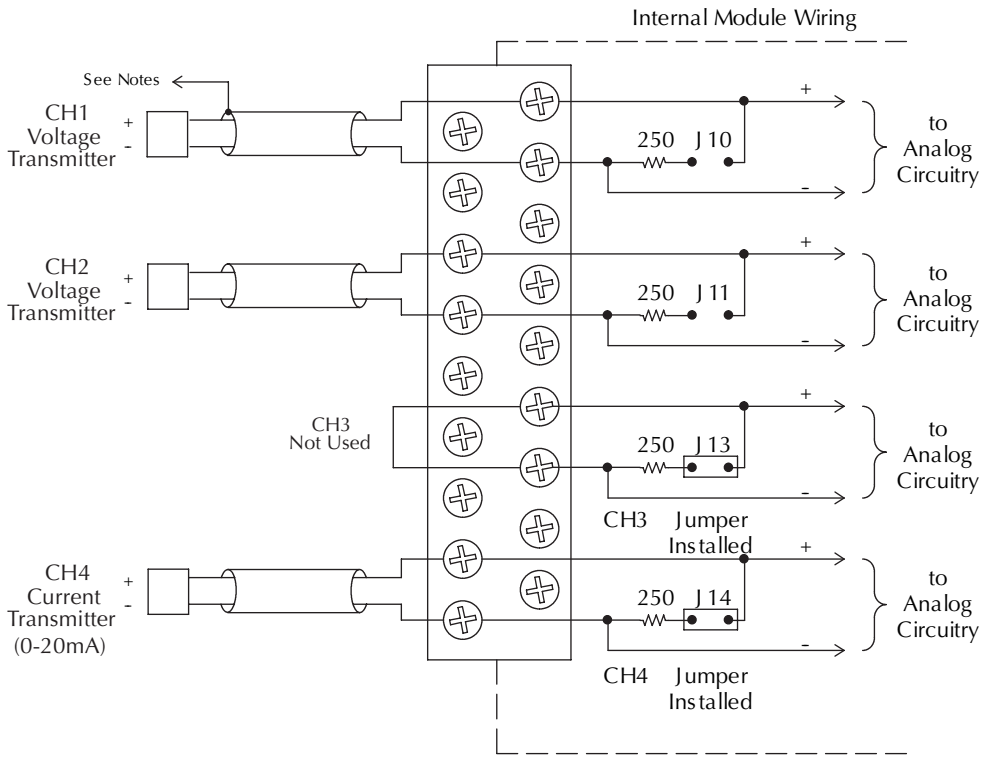

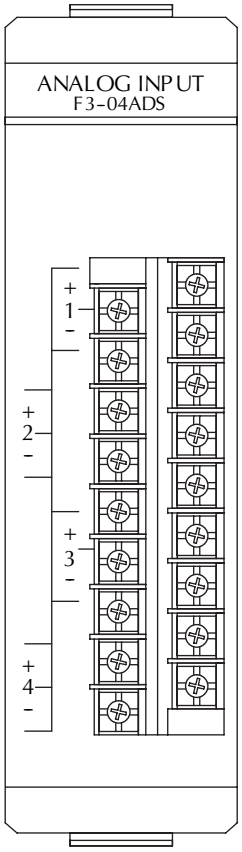

Analog Input Modules

F3-08AD-1 8-Channel Analog Input Retired (Replaces F3-08AD)	
Number of Channels	8, single ended (one common)
Input Ranges	4–20 mA
Resolution	12 bit (1 in 4096)
Low Pass Filter	-3db @ 200Hz (-6db/octave)
Input Impedance	250ohm ± 0.1%, 1/2W current input
Absolute Maximum Ratings	±40mA
Conversion Time	1 channel per CPU scan
Converter Type	Successive approximation, MAX170
Linearity Error	± 1 count (0.03% of full scale) maximum
Input Stability	±0.05 count
Maximum Inaccuracy	0.1% of full scale at 77ºF (25ºC)
Accuracy vs. Temperature	57ppm/ºC maximum full scale (including maximum offset change of 2 counts)

Recommended Fuse	0.032 A, Series 217 fast-acting
Power Budget Requirement	45mA @9 VDC, 55mA @ 24VDC
External Power Supply	None required
Operating Temperature	32° to 140°F (0° to 60°C)
Storage Temperature	-4° to 158°F (-20° to 70°C)
Relative Humidity	5 to 95% (non-condensing)
Environmental air	No corrosive gases permitted
Vibration	MIL STD 810C 514.2
Shock	MIL STD 810C 516.2
Noise Immunity	NEMA ICS3-304

See page tDL3-26 for part numbers of *ZIP*Link cables and connection modules compatible with this I/O module.

Note 1: Terminate all shields at their respective signal source.
Note 2: To avoid "ground loop" errors, the following transmitter types are recommended:
2 and 3 wire: Isolation between input signal and P/S
4 wire: Full isolation between input signal, P/S and output signal.
Note 3: A Series 217 0.032A fast-acting fuse is recommended for 4-20mA applications.

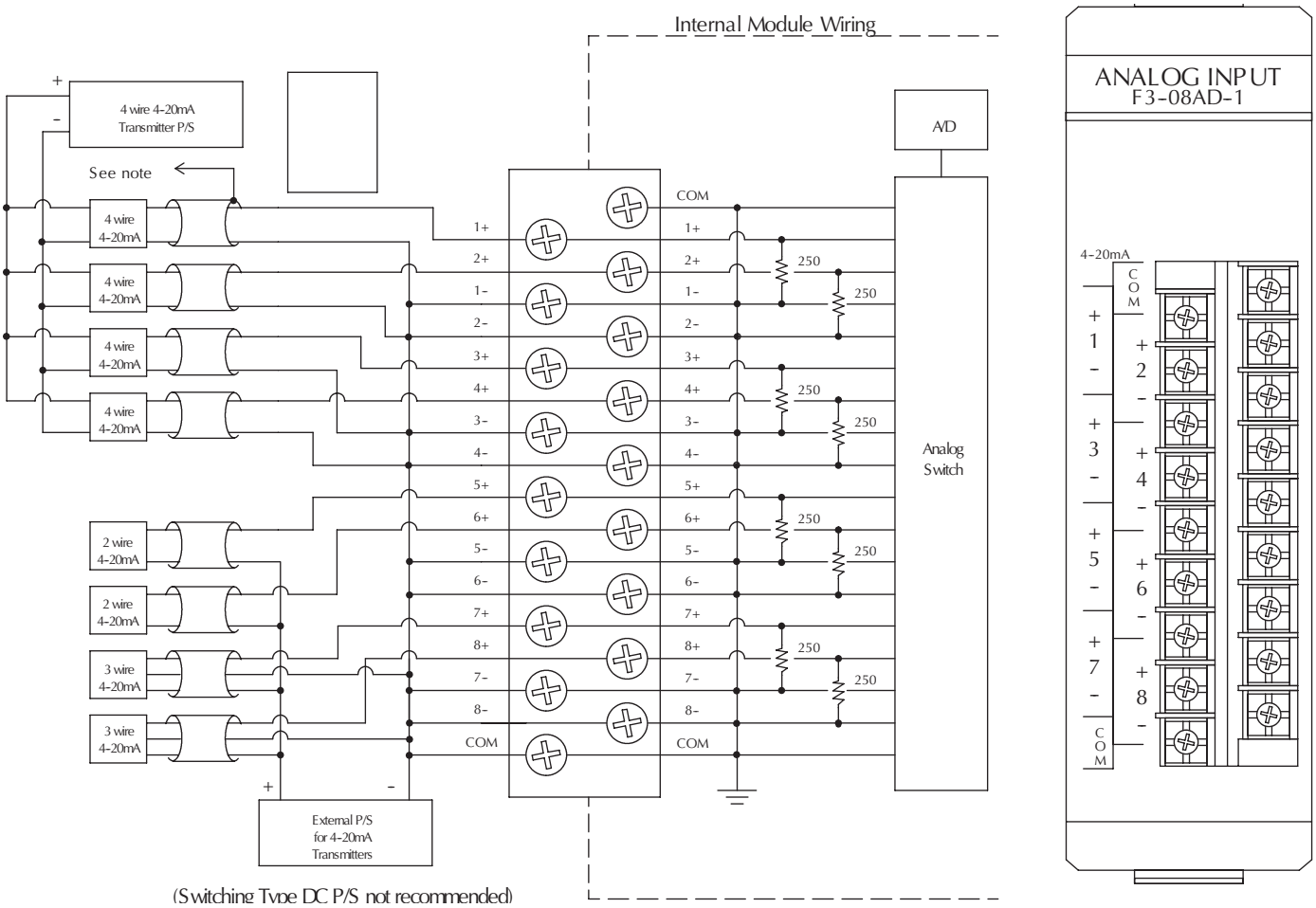

Analog Input Modules

F3-16AD 16-Channel Analog Input $1,049.00	
Number of Channels	16, single ended (one common)
Input Ranges	±5V, ±10V, 0–5 V1, 0–10 V, 0–20 mA, 4–20 mA2
Channels Individually Configured	Range is selected for all channels. Each channel can be wired for voltage or current.
Resolution	12 bit (1 in 4096)
Input Impedance	2M ohm, voltage input, 500ohm ±1% current input
Absolute Maximum Ratings	±25mA, voltage input ±30mA, current input
Conversion Time	35µs per channel, 1 channel per CPU scan
Converter Type	Successive Approximation, AD574
Linearity Error	±1 count maximum
Maximum Inaccuracy at 77°F (25°C)	0.25% of full scale, voltage input 1.25% of full scale, current input
Accuracy vs. Temperature	57ppm /ºC maximum full scale

Recommended Fuse	0.032 A, Series 217 fast-acting, current inputs
Power Budget Requirement	55mA @ 9VDC, 65mA @ 24VDC
External Power Supply	None required
Operating Temperature	32° to 140°F (0° to 60 C)
Storage Temperature	-4° to 158°F (-20° to 70°C)
Relative Humidity	5 to 95% (non-condensing)
Environmental Air	No corrosive gases permitted
Vibration	MIL STD 810C 514.2
Shock	MIL STD 810C 516.2
Noise Immunity	NEMA ICS3-304

- *Requires gain adjustment with potentiometer.*
- *Resolution is 3275 counts (instead of 4096). Allows easier broken transmitter detection.*

See page tDL3-26 for part numbers of *ZIP*Link cables and connection modules compatible with this I/O module.

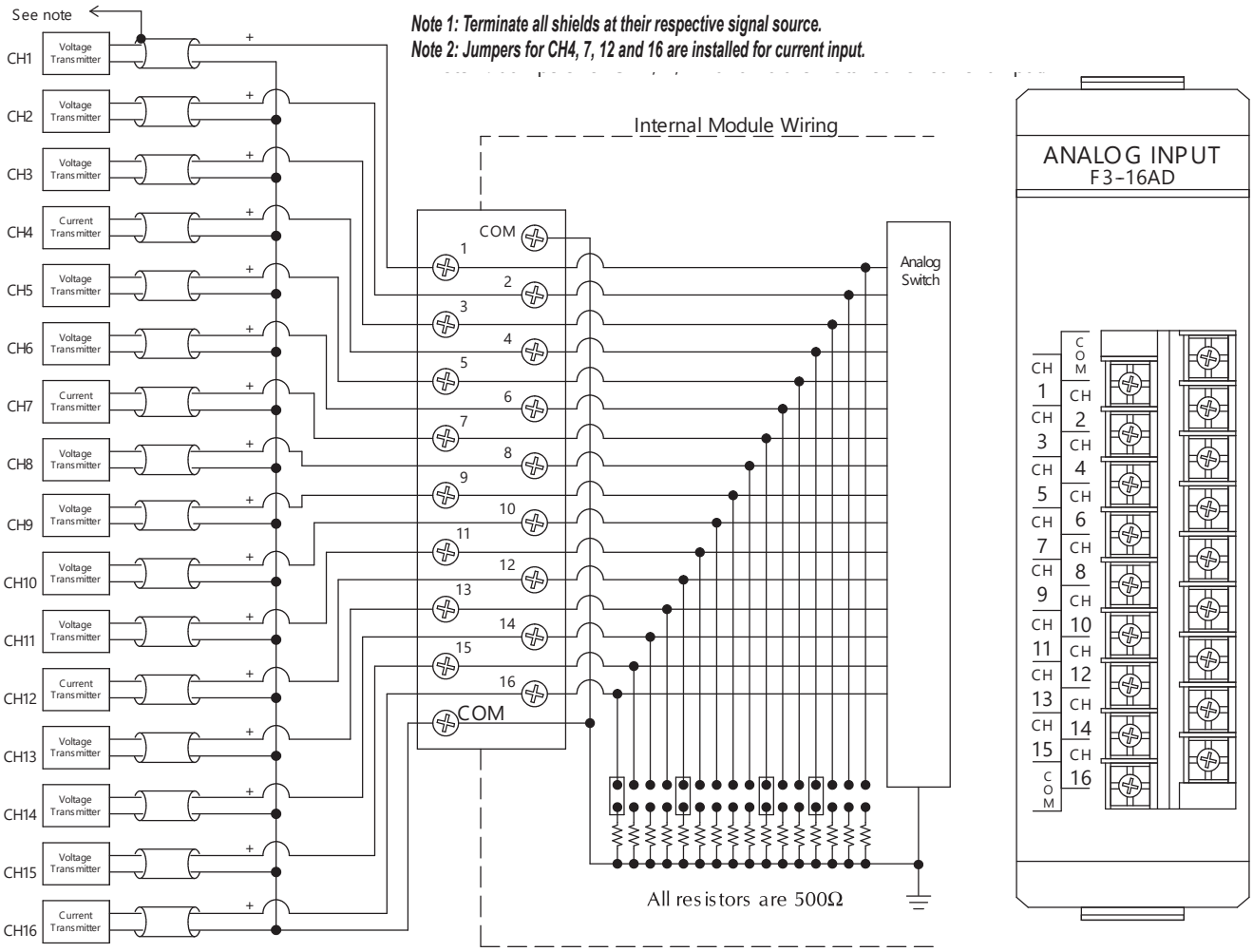

Temperature Input Modules

F3-08THM-J 8-Channel Thermocouple Input $1,175.00	
Note: When you order the module, replace the "n" with the type of thermocouple needed. For example, to order a Type J thermocouple module, order part number F3-08THM-J; J is a stock item.	
Input Ranges	Type J: -210/760ºC, -350/1390ºF -1: 0–50 mV -2: 0–100 mV
Resolution	12 bit (1 in 4096)
Input Impedance	27K ohm DC
Absolute Maximum Ratings	Fault protected input, 130 Vrms or 100VDC
Cold Junction Compensation	Automatic
Conversion Time	15ms per channel, minimum 1 channel per CPU scan

Converter Type	Successive approximation, AD574
Linearity Error	±1 count (0.03% of full scale) maximum
Maximum Inaccuracy at 77ºF (25ºC)	0.35% of full scale
Accuracy vs. Temperature	57ppm/ºC maximum full scale
Power Budget Requirement	50mA @ 9VDC, 34mA @ 24VDC
External Power Supply	None required
Operating Temperature	32° to 140°F (0° to 60°C)
Storage Temperature	-4° to 158°F (-20° to 70°C)
Relative Humidity	5 to 95% (non-condensing)
Environmental Air	No corrosive gases permitted
Vibration	MIL STD 810C 514.2
Shock	MIL STD 810C 516.2
Noise Immunity	NEMA ICS3-304

Notes:
1. Terminate shields at the respective signal source.
2. Leave unused channel open (no connection).
3. This module is not compatible with the ZIPLink wiring system.

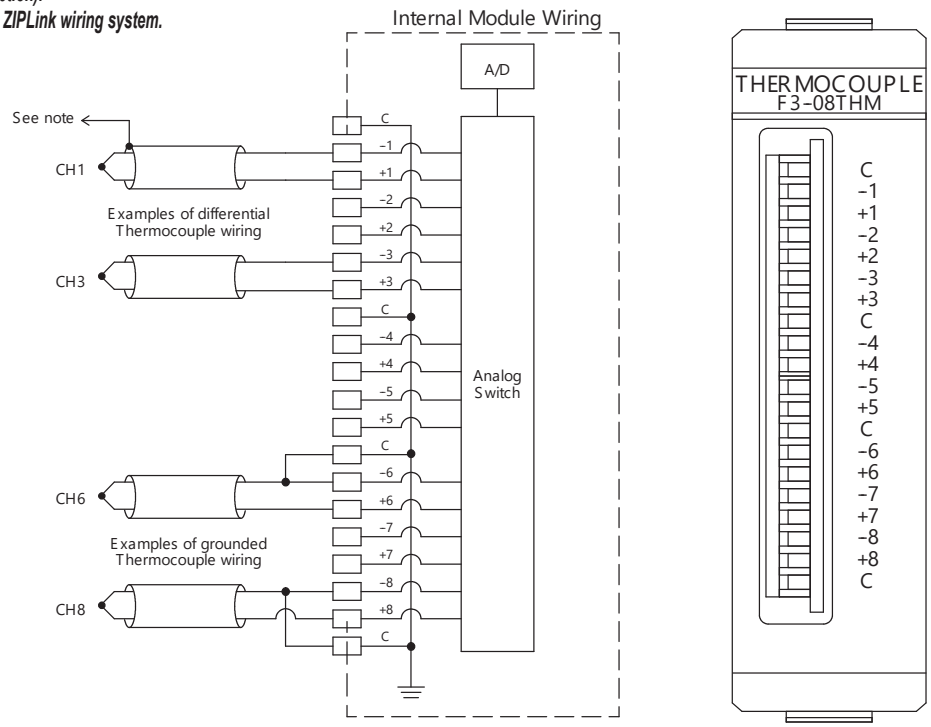

Analog Output Modules

F3-04DA-1 Retired 4-Channel Analog Output	
Number of Channels	4
Output Range	0–5 V, 0–10 V 4–12 mA, 4–20 mA (source)
Channels Individually Configured	Yes
Resolution	12-bit (1 in 4096)
Output Type	Single ended (one common)
Output Impedance	0.5 Ω typical, voltage output
Output Current	5mA source, 2.5 mA sink (voltage)
Short-circuit Current	40mA typical, voltage output
Load Impedance	1kΩ maximum, current output 2kΩ minimum, voltage output
Linearity Error	±1 count (±0.03% maximum)
Maximum Inaccuracy at 77º F (25º C)	± 0.6% of span,current output ± 0.2% of span, voltage output

Accuracy vs. Temperature	±50ppm/ºC maximum
Conversion Time	30µs maximum
Power Budget Requirement	144mA @ 9V, 108mA @24V
External Power Supply	None required
Operating Temperature	32° to 140°F (0° to 60°C)
Storage Temperature	-4° to 158°F (-20° to 70°C)
Relative Humidity	5 to 95% (non-condensing)
Environmental Air	No corrosive gases permitted
Vibration	MIL STD 810C 514.2
Shock	MIL STD 810C 516.2
Noise Immunity	NEMA ICS3-304

See page tDL3-26 for part numbers of *ZIP*Link cables and connection modules compatible with this I/O module.

Note 1: Shields should be connected to the 0V (COM) of the module.
Note 2: Unused voltage and current outputs should remain open (no connections).

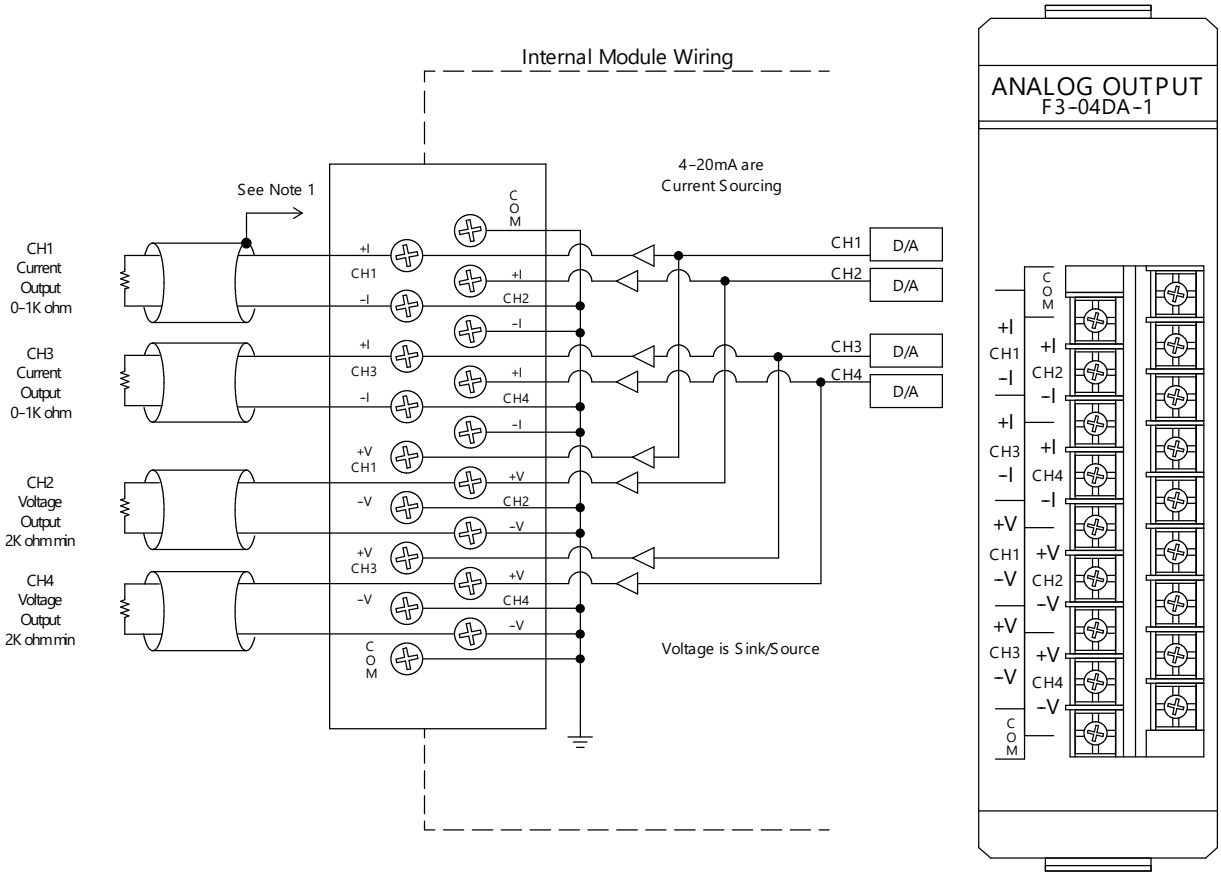

DL-305 Instruction Set

Boolean Instructions

Store (STR)
Begins a new rung or an additional branch in a rung with a normally open contact.

Store Not (STRN)
Begins a new rung or an additional branch in a rung with a normally closed contact.

Or (OR)
Logically ORs a normally open contact in parallel with another contact in a rung.

Or not (OR NOT)
Logically ORs a normally closed contact in parallel with another contact in a rung.

And (AND)
Logically ANDs a normally open contact in series with another contact in a rung.

And not (ANDN)
Logically ANDs a normally closed contact in series with another contact in a rung.

And store (AND STR)
Logically ANDs two branches in a rung in series.

Or store (OR STR)
Logically ORs two branches of a rung in parallel.

Out (OUT)
Reflects the status of the rung (ON/OFF) and outputs the discrete (ON/OFF) state to the specified image register.

Reset (RST)
Resets or turns OFF an output or resets a counter.

Set out (SET OUT)
Reflects the status of the rung (ON/OFF) and outputs the discrete (ON/OFF) state to the specified image register.

Set out reset (SET OUT RST)
Typically known as a one shot, when the input logic produces an OFF to ON transition the output will turn ON for one CPU scan.

Client control set (MCS)/Client control reset (MCR)
The Client control set and Client Control Reset instructions are used to provide an additional left power rail which is controllable by an input contact. This is sometimes known as a sub power rail. Any number of rungs of ladder logic can be disabled using these instructions.

Accumulator Load and Output Instructions

Data store (F50)
Loads the value of a 16-bit register, two consecutive 8-bit registers, or a 4-digit BCD value into the accumulator.

Data store 1(F51)
Loads the value from a specified 8-bit register into the lower 8 bits of the accumulator.

Data store 2 (F52)
Loads the value of the most significant 4 bits of a specified 8 bit register into the least significant 4 bits of the accumulator.

Data store 3 (F53)
Loads the value of the least significant 4 bits of a specified 8 bit register into the least significant 4 bits of the accumulator.

Data store 5 (F55)
Loads the value of 16-image register locations for a specified 16-point input module into the accumulator.

Data out (F60)
Copies the 16-bit value in the accumulator to a 16-bit reference or two consecutive 8-bit registers.

Data out 1 (F61)
Copies the value in the lower 8 bits of the accumulator to a specified 8-bit register.

Data out 2 (F62)
Copies the value in the least significant 4 bits of the accumulator into the most significant 4 bits of a specified 8-bit register.

Data out 3 (F63)
Copies the value in the least significant 4 bits of the accumulator to the least significant 4 bits of a specified 8-bit register.

Data out 5 (F65)
Copies the 16-bit value in the accumulator to the image register of a specified 16 point output module.

Bit Operation Instructions

Shift left (F80)
Shifts the value in the accumulator a specified number of bits (15 maximum) to the left.

Shift right (F81)
Shifts the value in the accumulator a specified number of bits (15 maximum) to the right.

Decode (F82)
Decodes a 4-bit binary number in the accumulator by setting the appropriate bit position to a one.

Encode (F83)
Encodes the accumulator bit position that contains a 1 by returning the appropriate 4-bit binary representation.

Binary (F85)
Converts a BCD value in the accumulator to the binary/HEX equivalent value.

Binary coded decimal (F86)
Converts a binary/HEX equivalent value in the accumulator to the BCD equivalent.

Inverse (F84)
Generates the one's complement of the number in the accumulator.

Accumulator Logic Instructions

Data and (F75)
Logically ANDs the value in a 16-bit reference, two consecutive 8-bit registers, or a 4-digit BCD constant with the value in the accumulator.

Data or (F76)
Logically ORs the value in a 16-bit reference, two consecutive 8-bit registers, or 4-digit BCD constant with the value in the accumulator.

Compare (F70)
Compares the value in a 16-bit reference, two consecutive 8-bit registers, or 4-digit BCD constant with the value in the accumulator.

Math Instructions

Add (F71)
Adds the value of a 16-bit reference, two consecutive 8 bit registers, or a 4-digit BCD constant with the value in the accumulator.

Subtract (F72)
Subtracts the value in a 16-bit register, two consecutive 8-bit registers, or a 4-digit BCD constant from the value in the accumulator.

Multiply (F73)
Multiplies the value in a 16-bit register, two consecutive 8-bit registers, or a 4-digit BCD constant by the value in the accumulator.

Divide (F74)
Divides the value in the accumulator by the value in a 16-bit register, two consecutive 8-bit registers, or a 4-digit BCD constant.

Message Instructions

Fault (F20)
Used to display a 4-digit BCD constant, 16-bit register, or two consecutive 8-bit data registers on the handheld programmer or DirectSoft.

Boolean Instructions

Store (STR)
Begins a new rung or an additional branch in a rung with a normally open contact.

Store not (STR NOT)
Begins a new rung or an additional branch in a rung with a normally closed contact.

Or (OR)
Logically ORs a normally open contact in parallel with another contact in a rung.

Or Not (OR NOT)
Logically ORs a normally closed contact in parallel with another contact in a rung.

And (AND)
Logically ANDS a normally open contact in series with another contact in a rung.

And Not (AND NOT)
Logically ANDS a normally closed contact in series with another contact in a rung.

And Store (AND STR)
Logically ANDS two branches of a rung in series.

Or Store (OR STR)
Logically ORS two branches of a rung in parallel.

Out (OUT)
Reflects the status of the rung (on/off) and outputs the discrete (on/off) state to the specified image register point or memory location.

Or Out (OR OUT)
Reflects the status of the rung and outputs the discrete (ON/OFF) state to the image register. Multiple OR OUT instructions referencing the same discrete point can be used in the program.

Not (NOT)
Inverts the status of the rung at the point of the instruction.

Positive Differential (PD)
Is typically known as a a one shot. When the input logic produces an off to on transition, the output will energize for one CPU scan.

Set (SET)
An output that turns on a point or a range of points. The reset instruction is used to turn the point(s) OFF that were set ON with the set instruction.

Reset (RST)
An output that resets a point or a range of points.

Pause outputs (PAUSE)
Disables the update for a range of specified output points.

Comparative Boolean Instructions

Store if Equal (STR E)
Begins a new rung or additional branch in a rung with a normally open comparative contact. The contact will be on when A = B.

Store if Not Equal (STR NOT E)
Begins a new rung or additional branch in a rung with a normally closed comparative contact. The contact will be on when A =/ B.

Or if Equal (OR E)
Connects a normally open comparative contact in parallel with another contact. The contact will be on when A = B.

Or if Not Equal (OR NOT E)
Connects a normally closed comparative contact in parallel with another contact. The contact will be on when A =/ B.

And if Equal (AND E)
Connects a normally open comparative contact in series with another contact. The contact will be on when A = B.

And if Not Equal (AND NOT E)
Connects a normally closed comparative contact in series with another contact. The contact will be on when A =/ B.

Store (STR)
Begins a new rung or additional branch in a rung with a normally open comparative contact. The contact will be on when A > B.

Store not (STR NOT)
Begins a new rung or additional branch in a rung with a normally closed comparative contact. The contact will be on when A > B.

Or (OR)
Connects a normally closed comparative contact in parallel with another contact. The contact will be on when A _> B.

Or Not (OR NOT)
Connects a normally closed comparative contact in parallel with another contact. The contact will be on when A<B.

And (AND)
Connects a normally open comparative contact in series with another contact. The contact will be on when A _> B.

And Not (AND NOT)
Connects a normally closed comparative contact in series with another contact. The contact will be on when A < B.

Bit of Word Boolean Instructions

Store Bit of Word (STRB)
Begins a new rung or an additional branch in a rung with a normally open contact that examines single bit of a V-memory location.

Store Not Bit of Word (STRNB)
Begins a new rung or an additional branch in a rung with a normally closed contact that examines single bit of a V-memory location.

Or Bit of Word (ORB)
Logically ORS a normally open bit of word contact in parallel with another contact in a rung.

Or Not Bit of Word (ORNB)
Logically ORS a normally closed bit of word contact in parallel with another contact in a rung.

And Bit of Word (ANDB)
Logically ANDS a normally open bit of word contact in series with another contact in a rung.

And Not Bit of Word (ANDNB)
Logically ANDS a normally closed bit of word contact in series with another contact in a rung.

Out Bit of Word (OUTB)
Reflects the status of the rung (on/off) and outputs the discrete (on/off) state to the specified bit of a V-memory location.

Set Bit of Word (SETB)
An output that turns on a single bit of a V-memory location. The bit remains on until it is reset. The reset bit of word instruction is used to turn off the bit.

Reset Bit of Word (RSTB)
An output that resets a single bit of a V-memory location.

Immediate Instructions

Store Immediate (STR I)
Begins a rung/branch of logic with a normally open contact. The contact will be updated with the current input field status when processed in the program scan.

Store Not Immediate (STR NOT I)
Begins a rung/branch of logic with a normally closed contact. The contact will be updated with the current input field status when processed in the program scan.

Or Immediate (OR I)
Connects a normally open contact in parallel with another contact. The contact will be updated with the current input field status when processed in the program scan.

Or Not Immediate (OR NOT I)
Connects a normally closed contact in parallel with another contact. The contact will be updated with the current input field status when processed in the program scan.

And Immediate (AND I)
Connects a normally open contact in series with another contact. The contact will be updated with the current input field status when processed in the program scan.

And Not Immediate (AND NOT I)
Connects a normally closed contact in series with another contact. The contact will be updated with the current input field status when processed in the program scan.

Out Immediate (OUT I)
Reflects the status of the rung. The output field device status is updated when the instruction is processed in the program scan.

Or out immediate (OR OUTI)
Reflects the status of the rung and outputs the discrete (ON/OFF) state to the image register. Multiple OR OUT instructions referencing the same discrete point can be used in the program. The output field device status is updated when the instruction is processed in the program scan.

Set Immediate (SET I)
An output that turns on a point or a range of points. The reset instruction is used to turn the point(s) off that were set. The output field device status is updated when the instruction is processed in the program scan.

Reset Immediate (RST I)
An output that resets a point or a range of points. The output field device status is updated when the instruction is processed in the program scan.

Timer, Counter, and Shift Register Instructions

Timer (TMR)
Single input incremental timer with 0.1 second resolution (0-999.9 seconds).

Fast Timer (TMRF)
Single input incremental timer with 0.01 second resolution (0-99.99 seconds).

Accumulating Timer (TMRA)
Two input incremental timer with 0.1 second resolution (0-9,999,999.9 sec.). Time enable/reset inputs control the timer.

Accumulating Fast Timer (TMRAF)
Two input incremental timer with 0.01 second resolution (0-999,999.99 sec.). Time and enable/reset inputs control timer.

Counter (CNT)
Two input incremental counter (0-9999). Count and reset inputs control the counter.

Stage Counter (SGCNT)
Single input incremental counter (0-9999). RST instruction must be used to reset count.

Up Down Counter (UDC)
Three input counter (0-99999999). Up, down, and reset inputs control the counter.

Shift Register (SR)
Shifts data through a range of control relays with each clock pulse. The data, clock, and reset inputs control the shift register.

D3-350 Instruction Set

Accumulator / Stack Load and Output Data

Load (LD)
Loads a 16-bit word into the lower 16-bits of the accumulator / stack.

Load Double (LDD)
Loads a 32-bit word into the accumulator / stack.

Load Real Number (LDR)
Loads a real number contained in two consecutive V-memory locations or an 8-digit constant into the accumulator.

Load Formatted (LDF)
Loads the accumulator with a specified number of consecutive discrete memory bits.

Load Address (LDA)
Loads the accumulator with the HEX value for an octal constant (address).

Load Accumulator Indexed (LDX)
Loads the accumulator with a V-memory address to be offset by the value in the accumulator stack.

Load Accumulator Indexed from Data Constants (LDSX)
Loads the accumulator with an offset constant value (ACON/NCON) from a data label area (DLBL).

Out (OUT)
Copies the value in the lower 16-bits of the accumulator to a specified V memory location.

Out Double (OUTD)
Copies the value in the accumulator to two consecutive V-memory locations.

Out Formatted (OUTF)
Outputs a specified number of bits (1-32) form the accumulator to the specified discrete memory locations.

Output Indexed (OUTX)
Copies a 16-bit value from the first level of the accumulator stack to a source address offset by the value in the accumulator.

Pop (POP)
Moves the value from the first level of the accumulator stack to the accumulator and shifts each value in the stack up one level.

Logical Instructions (Accumulator)

And (AND)
Logically ANDs the lower 16 bits in the accumulator with a V memory location.

And Double (ANDD)
Logically ANDs the value in the accumulator with an 8 digit constant.

And Formatted (ANDF)
Logically ANDs the value in the accumulator and a specified range of discrete memory bits (1-32).

Or (OR)
Logically ORs the lower 16-bits in the accumulator with a V-memory location.

Or Double (ORD)
Logically ORs the value in the accumulator with an 8-digit constant.

Or Formatted (ORF)
Logically ORs the value in the accumulator with a range of discrete bits (1-32).

Exclusive Or (XOR)
Performs an Exclusive OR of the value in the lower 16-bits of the accumulator and a V-memory location.

Exclusive Or Double (XORD)
Performs an Exclusive OR of the value in the accumulator and an 8 digit constant.

Exclusive Or Formatted (XORF)
Performs an exclusive OR of the value in the accumulator and a range of discrete bits (1-32).

Compare (CMP)
Compares the value in the lower 16 bits of the accumulator with a V-memory location.

Compare Double (CMPD)
Compares the value in the accumulator with two consecutive V-memory locations or an 8-digit constant.

Compare Formatted (CMPF)
Compares the value in the accumulator with a specified number of discrete bits (1-32).

Compare Real Number (CMPR)
Compares the real number in the accumulator with two consecutive V-memory locations or an 8-digit real number constant.

Math Instructions (Accumulator)

Add (ADD)
Adds a BCD value in the lower 16-bits in the accumulator with a V-memory location. The result resides in the accumulator.

Add Double (ADDD)
Adds a BCD value in the accumulator with two consecutive V-memory locations or an 8-digit constant. The result resides in the accumulator.

Add Real Number (ADDR)
Adds a real number in the accumulator with a real number constant or a real number contained in two consecutive V-memory locations. The result resides in the accumulator.

Subtract (SUB)
Subtract a BCD value, which is either a V-memory location or a 4-digit constant, from the lower 16-bits in the accumulator. The result resides in the accumulator.

Subtract Double (SUBD)
Subtracts a BCD value, which is either two consecutive V-memory locations or an 8-digit constant, from a value in the accumulator. The result resides in the accumulator.

Subtract Real Number (SUBR)
Subtract a real number, which is either two consecutive V-memory locations or a real number constant, from the real number in the accumulator. The result resides in the accumulator.

Multiply (MUL)
Multiplies a BCD value, which is either a V-memory location or a 4-digit constant, by the value in the lower 16-bits in the accumulator. The result resides in the accumulator.

Multiply Double (MULD)
Multiplies a BCD value contained in two consecutive V-memory location by the value in the accumulator. The result resides in the accumulator.

Multiply Real Number (MULR)
Multiplies a real number, which is either two consecutive V-memory locations or a real number constant, by the real number in the accumulator. The result resides in the accumulator.

Divide (DIV)
Divides a BCD value in the lower 16-bits of the accumulator by a BCD value which is either a V-memory location or a 4-digit constant. The result resides in the accumulator.

Divide Double (DIVD)
Divides a BCD value in the accumulator by a BCD value which is either two consecutive V-memory locations or an 8-digit constant. The result resides in the accumulator.

Divide Real Number (DIVR)
Divides a real number in the accumulator by a real number which is either two consecutive V-memory locations or a real number constant. The result resides in the accumulator.

Add Binary (ADDB)
Adds the binary value in the lower 16 bits of the accumulator to a value which is either a V-memory location, or a 16-bit constant. The result resides in the accumulator.

Subtract Binary (SUBB)
Subtracts a 16-bit binary value, which is either a V-memory location or a 16 bit constant, from the lower 16 bits in the accumulator. The result resides in the accumulator.

Multiply Binary (MULB)
Multiplies a 16-bit binary value, which is either a V-memory location or a 16-bit constant, by the lower 16 bits in the accumulator. The result resides in the accumulator.

Divide Binary (DIVB)
Divides the binary value in the lower 16 bits in the accumulator by a value which is either a V-memory location or a 16-bit constant. The result resides in the accumulator.

Increment (INC)
Increments a BCD value in a specified V-memory location by 1 each time the instruction is executed.

Decrement (DEC)
Decrements a BCD value in a specified V-memory location by 1 each time the instruction is executed.

Increment Binary (INCB)
Increments a binary value in a specified V-memory location by 1 each time the instruction is executed.

Decrement Binary (DECB)
Decrements a binary value in a specified V-memory location by 1 each time the instruction is executed.

Bit Instructions (Accumulator)

Sum (SUM)
Counts the number of bits in set to "1" in the accumulator. The HEX result resides in the accumulator.

Shift Left (SHFL)
Shifts the bits in the accumulator a specified number of places to the left.

Shift Right (SHFR)
Shifts the bits in the accumulator a specified number of places to the right.

Rotate Left (ROTL)
Rotates the bits in the accumulator a specified number of places to the left.

Rotate Right (ROTR)
Rotates the bits in the accumulator a specified number of places to the right.

Encode (ENCO)
Encodes the bit position set to 1 in the accumulator, and returns the appropriate binary representation in the accumulator.

Decode (DECO)
Decodes a 5-bit binary value (0-31) in the accumulator by setting the appropriate bit position to 1 in the accumulator.

Number Conversion Instructions (Accumulator)

Binary (BIN)
Converts the BCD value in the accumulator to the equivalent binary value. The result resides in the accumulator.

Binary Coded Decimal (BCD)
Converts the binary value in the accumulator to the equivalent BCD value. The result resides in the accumulator.

Invert (INV)
Takes the one's complement of the 32-bit value in the accumulator. The result resides in the accumulator.

Ten's complement (BCDCPL)
Takes the ten's complement of the BCD value in the accumulator. The result resides in the accumulator.

ASCII to HEX (ATH)
Converts the table of ASCII values to a table of hexadecimal values.

HEX to ASCII (HTA)
Converts a table of hexadecimal values to a table of ASCII values.

Segment (SEG)
Converts a 4-digit HEX number in the accumulator to a corresponding bit pattern for interfacing to seven segment displays. The result resides in the accumulator.

Gray code to BCD (GRAY)
Converts a 16-bit GRAY code value in the accumulator to a corresponding BCD value. The result resides in the accumulator.

Shuffle digits (SFLDGT)
Shuffles a maximum of 8 digits rearranging them in a specified order. The result resides in the accumulator.

Binary to Real Number (BTOR)
Converts the integer value in the accumulator into a real number. The result resides in the accumulator.

Real Number to Binary (RTOB)
Converts the real number in the accumulator into an integer value. The result resides in the accumulator.

Table Instructions

Move (MOV)
Moves the values from on V-memory table to another V-memory table.

Move Memory Cartridge/Load Label (MOVMC/LDBL)
Copies data from data label area in program ladder memory to V-memory.

Move Memory Cartridge/Load Label (MOVMC/LDLBL)
Copies data between V-memory and program ladder memory.

Clock/Calendar Instructions

Date (DATE)
Sets the date (year, month, day, day of the week) in the CPU calendar using two consecutive V-memory locations.

Time (TIME)
Sets the time (hour, seconds, and minutes) in the CPU using two consecutive V-memory locations.

CPU Control Instructions

No Operation (NOP)
Inserts a no operation coil at a specified program address.

End (END)
Marks the termination point for the normal program scan. An End instruction is required at the end of the main program body.

Stop (STOP)
Changes the operational mode of the CPU form Run to Program (Stop).

Reset Watchdog Timer (RSTWT)
Resets the CPU watchdog timer.

Program Control Instructions

Goto/Label (GOTO/LBL)
Skips (does not execute) all instructions between the GOTO and the corresponding label (LBL) instruction.

For/Next (FOR/NEXT)
Executes the logic between the FOR and NEXT instructions a specified number of times.

Goto Subroutine/Subroutine Return Conditional/ Subroutine Return (GTS/SBR w/RT)
When a GTS instruction is executed, the program jumps to the SBR (subroutine). The subroutine is terminated with an RT instruction (unconditional return). When a return is executed, the program continues from the instruction after the calling GTS instruction.

Client Line Set/Client Line Reset (MLS/MLR)
Allows the program to control sections of ladder logic by forming a new power rail. The MLS marks the beginning of a power rail and the MLR marks the end of the power rail control.

Interrupt Instructions

Interrupt Routine/Interrupt Return/Interrupt Return Conditional (INT/IRT/IRTC)
When a hardware or software interrupt occurs, the interrupt routine will be executed. The INT instruction is the beginning of the interrupt routine. The interrupt routine is terminated with an IRT instruction (unconditional interrupt return). When an interrupt return is reached, the execution of the program continues from the instruction where the program execution was prior to the interrupt.

Enable Interrupt (ENI)
Enables hardware and software interrupts to be acknowledged.

Disable Interrupt (DISI)
Disables hardware and software interrupts from being acknowledged.

Intelligent Module Instructions

Read from Intelligent Module (RD)
Reads a block of data (1-128 bytes max.) from an intelligent I/O module.

Write to Intelligent Module (WT)
Writes a block of data (1-28 bytes max.) to an intelligent I/O module.

Network Instructions

Read from network (RX)
Reads a block of data from another CPU on the network.

Write to network (WX)
Writes a block of data from the Client device to a Server device on the network.

Message Instructions

Fault/Data Label (FAULT/DLBL)
Displays a V-memory value or a Data label constant to the handheld programmer or personal computer using DirectSOFT.

Numerical Constant/ASCII constant (NCON/ACON)
Stores constants in numerical or ASCII form for use with other instructions.

Print Message (PRINT)
Prints the embedded text or text/data variable message to the specified communications port. Maximum message length is 255 words.

D3-350 Instruction Set

RLL PLUS Programming Instructions

Initial stage (ISG)

The initial stage instruction is used as a starting point for the user application program. The ISG instruction will be active on power up and PROGRAM to RUN transitions.

Stage (SG)

Stage instructions are used to create structured programs. They are program segments which can be activated or deactivated with control logic.

Jump (JMP)

Normally open coil that deactivates the active stage and activates a specified stage when there is power flow to the coil.

Not Jump (NJMP)

Normally closed coil that deactivates the active stage and activates a specified stage when there is no power flow to the coil.

Converge stages (CV)

Converge stages are a group of stages that when all stages are active the associated converge jump(s) (CVJMP) will activate another stage(s). One scan after the CVJMP is executed, the converge stages will be deactivated.

Converge Jump (CVJMP)

Normally open coil that deactivates the active CV stages and activates a specified stage when there is power flow to the coil.

Block Call/Block/Block End (BCALL and BEND)

BCALL is a normally open coil that activates a block of stages when there is power flow to the coil. BLK is the label that marks the beginning of a block of stages. BEND is a label used to mark the end of a block of stages.

Drum Instructions

Timed Drum with Discrete Outputs (DRUM)

Time driven drum with up to 16 steps and 16 discrete output points. Output status is written to the appropriate output during each step. Specify a time base per count (in milliseconds). Each step can have a different number of counts to trigger the transition to the next step. Also define preset step as destination when reset occurs.

Time & Event Drum with Discrete Outputs (EDRUM)

Time and/or event driven drum with up to 16 steps and 16 discrete output points. Output status is written to the appropriate output during each step. Specify a time base per count (in milliseconds). Each step can have a different number of counts and an event to trigger counting. Once the time has expired, a transition to the next step occurs. Also define preset step as destination when reset occurs.

Time & Event Drum with Discrete Outputs & Output Mask (MDRUMD)

Time and/or event driven drum with up to 16 steps and 16 discrete output points. Actual output status is the result of a bit-by-bit AND between the output mask and the bit mask in the step. Specify a time base per count (in milliseconds). Each step can have a different number of counts and an event to trigger counting. Once the time has expired, a transition to the next step occurs. Also define preset step as destination when reset occurs.

Time & Event Drum with Word Output & Output Mask (MDRUMW)

Time and/or event driven drum with up to 16 steps and a single V-memory output location. Actual output word is the result of a bit-by-bit AND between the word mask and the bit mask in the step. Specify a time base per count (in milliseconds). Each step can have a different number of counts and an event to trigger counting. Once the time has expired, a transition to the next step occurs. Also define preset step as destination when reset occurs.