Relay Output Modules

P3-16TR $190.00

Relay Output

The P3-16TR Relay Output Module provides sixteen 1.25 A relay outputs with two isolated fused commons.

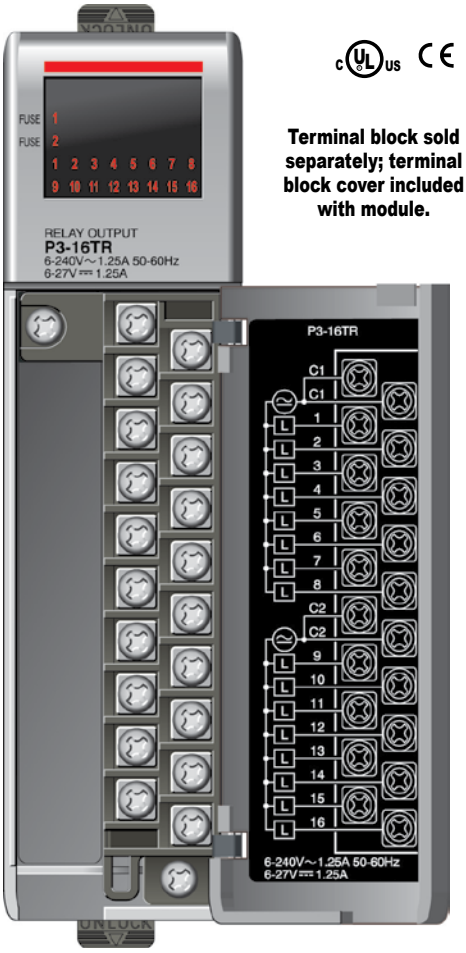

Terminal block sold separately; terminal block cover included with module.

Typical Relay Life	
Voltage & Type of Load	***Load Current 1.25A***
30VDC Resistive	240K
30VDC Solenoid	110K
120VAC Resistive	320K
120VAC Solenoid	210K
240VAC Resistive	240K
240VAC Solenoid	140K

WARNING: *EXPLOSION HAZARD – SUBSTITUTION OF COMPONENTS MAY IMPAIR SUITABILITY FOR CLASS I, DIVISION 2.*

We recommend using prewired ***ZIP***Link cables and connection modules. See Wiring Solutions.

Terminal block cover included. If you wish to hand-wire your module, a removable terminal block is sold separately. Order part number P3-RTB.

Output Specifications		
Outputs per Module		16
Operating Voltage Range (Tolerance)	(CE)	6.25–24 VDC (-15% / + 20%) 6–240 VAC (-15% / + 10%)
	(UL)	6–27 VDC (-15% / + 10%) 6–240 VAC (-10% / + 10%)
Output type		Relay, form A (SPST)
AC Frequency		47–63 Hz
Maximum Output Current @ Temp		1.25 A / point, 6.3 A / common @ 60°C for both AC and DC
Minimum Load Current		5mA @ 5VDC
Maximum Inrush Current		4A for 10ms
OFF to ON Response		m 10ms
ON to OFF Response		m 10ms
Status Indicators		Logic Side (16 points)
Error Status Indicator		Blown Fuse (one for each common)
Terminal Type (not included)		20-position removable terminal block
Commons per module		2 Isolated (8 point / common)
Fuses		6.3 A user replaceable fuse per common For replacement, order P3-FUSE-2. (Qty. 5/pkg.)

General Specifications	
Operating Temperature	0°C– 60°C (32°F–140°F),
Storage Temperature	-20ºC–70ºC (-4ºF–158ºF)
Humidity	5 to 95% (non-condensing)
Environmental Air	No corrosive gases permitted
Vibration	IEC60068-2-6 (Test Fc)
Shock	IEC60068-2-27 (Test Ea)
Field to Logic Side Isolation	1500VAC applied for 1 minute
Insulation Resistance	>10MΩ @ 500VDC
Heat Dissipation	3.93 W
Enclosure Type	Open equipment
Module Keying to Backplane	Electronic
Module Location	Any I/O slot in any local, expansion, or remote base in a Productivity3000 system.
Field Wiring	Removable terminal block (not included). Use ***ZIP***Link wiring system or optional terminal block. See Wiring Solutions.
Weight	160g (5.64 oz)
Agency Approvals	UL508 file E157382, Canada & USA UL1604 file E200031, Canada & USA CE (EN61131-2*) This equipment is suitable for use in Class 1, Division 2, Groups A, B, C and D or non-hazardous locations only.

***Meets EMC and Safety requirements. See the Declaration of Conformity for details.**

Removable Terminal Block Specifications	
Description	Part No. P3-RTB; 20 screw terminals
Wire Range	22–14 AWG (0.324 to 2.08 sq. mm) Solid / stranded conductor 3/64 in. (1.2 mm) insulation maximum USE COPPER CONDUCTORS , 60°C or equivalent.
Screw Driver Width	1/4 inch (6.5 mm) maximum
Screw Size	M3 size
Screw Torque	Field terminals - 7–9 in·lb (0.882–1.02 N·m) Self-jacking screws - 2.7–3.6 in·lb (0.3–0.4 N·m). Do not overtighten screws when installing terminal block.

Relay Output Modules

P3-16TR (cont'd)

Wiring Diagrams

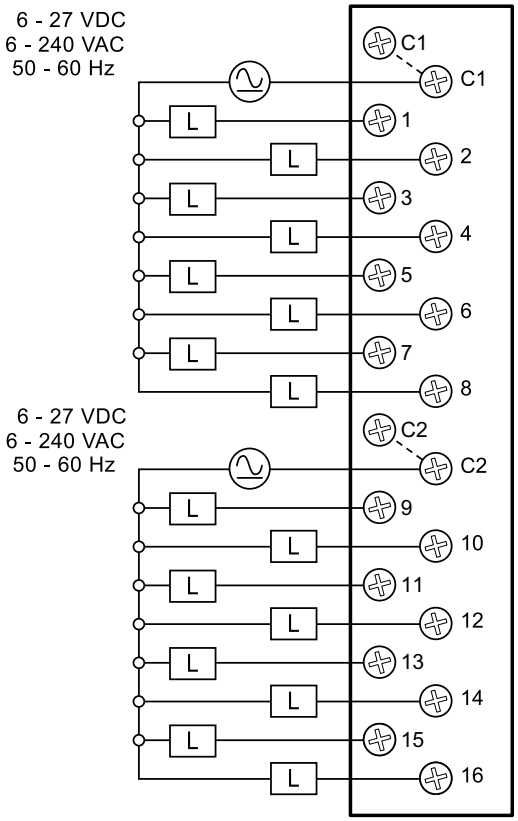

Replaceable Fuses

Order Part Number P3-FUSE-2.
(Qty. 5 per pkg.) One spare included with this module.

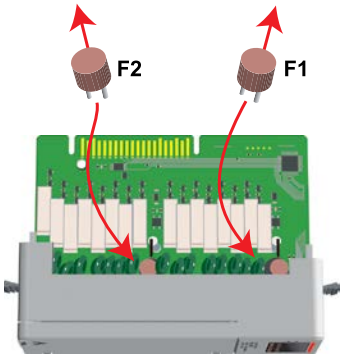

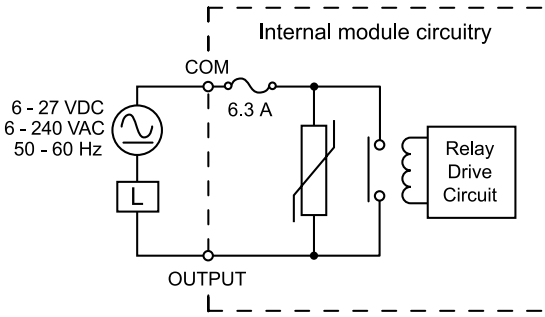

Wiring Solutions

Wiring Solutions using the *ZIP*Link wiring system

ZIPLinks eliminate the normally tedious process of wiring between devices by utilizing prewired cables and DIN rail mount connector modules. It's as simple as plugging in a cable connector at either end or terminating wires at only one end. Prewired cables keep
installation clean and efficient, using half the space at a fraction of the cost of standard terminal blocks. There are several wiring solutions available when using the ***ZIP***Link System ranging from PLC I/O-to-***ZIP***Link Connector Modules that are ready for field termination, options for connecting to third party devices, GS, DuraPulse and SureServo Drives, and specialty relay, transorb and communications modules. Pre-printed I/O-specific adhesive label strips for quick marking of ***ZIP***Link modules are provided with ***ZIP***Link cables. See the following solutions to help determine the best ***ZIP***Link system for your application.

Solution 1: Productivity Series I/O Modules to ZIPLink Connector Modules

When looking for quick and easy I/O-to-field termination, a ***ZIP***Link connector module used in conjunction with a prewired ***ZIP***Link cable, consisting of an I/O terminal block at one end and a multi-pin connector at the other end, is the best solution.

Using the PLC I/O Modules to ***ZIP***Link Connector Modules selector tables located in this section,

1. Locate your I/O module/PLC.
2. Select a ***ZIP***Link Module.
3. Select a corresponding ***ZIP***Link Cable.

Solution 2: Productivity Series I/O Modules to ZIPLink Connector Modules

When wanting to connect I/O to another device within close proximity of the I/O modules, no extra terminal blocks are necessary when using the ***ZIP***Link Pigtail Cables. ***ZIP***Link Pigtail Cables are prewired to an I/O terminal block with color-coded pigtail with soldered-tip wires on the other end.

Using the I/O Modules to 3rd Party Devices selector tables located in this section,

1. Locate your PLC I/O module.
2. Select a ***ZIP***Link Pigtail Cable that is compatible with your 3rd party device.

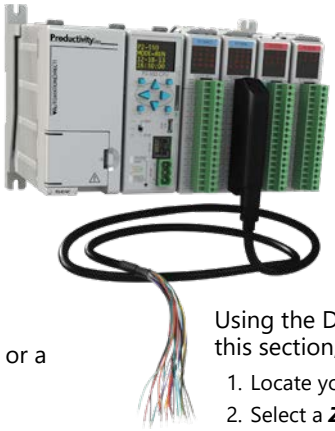

Solution 3: GS Series and DuraPulse Drives Communication Cables

Need to communicate via Modbus RTU to a drive or a network of drives?

ZIPLink cables are available in a wide range of configurations for connecting to PLCs and SureServo, SureStep, Stellar Soft Starter and AC drives. Add a ***ZIP***Link communications module to quickly and easily set up a multi-device network.

Using the Drives Communication selector tables located in this section,

1. Locate your Drive and type of communications.
2. Select a ***ZIP***Link cable and other associated hardware.

Wiring Solutions

Solution 4: Serial Communications Cables

ZIPLink offers communications cables for use with DirectLOGIC, CLICK, and Productivity3000 CPUs, that can also be used with other communications devices. Connections include a 6-pin RJ12 or 9-pin, 15-pin and 25-pin D-sub connectors which can be used in conjunction with the RJ12 or D-Sub Feedthrough modules.

Using the Serial Communications Cables selector table located in this section,

1. Locate your connector type
2. Select a cable.

Solution 5: Specialty ZIPLink Modules

For additional application solutions, ***ZIP***Link modules are available in a variety of configurations including stand-alone relays, 24VDC and 120VAC transorb modules, D-sub and RJ12 feedthrough modules, communication port adapter and distribution modules, and SureServo 50-pin I/O interface connection.

Using the ***ZIP***Link Specialty Modules selector table located in this section,

1. Locate the type of application.
2. Select a ***ZIP***Link module.

Solution 6: ZIPLink Connector Modules to 3rd Party Devices

If you need a way to connect your device to terminal blocks without all that wiring time, then our pigtail cables with color-coded soldered-tip wires are a good solution. Used in conjunction with any compatible ***ZIP***Link Connector Modules, a pigtail cable keeps wiring clean and easy and reduces troubleshooting time.

Using the Universal Connector Modules and Pigtail Cables table located in this section,

1. Select module type.
2. Select the number of pins.
3. Select cable.

CPU I/O Modules to ZIPLink Connector Modules - Productivity3000®

Productivity3000 CPU Input Module *ZIP*Link Selector

CPU		ZIPLink		
Input Module	# of Terms	Component	Module Part No.	Cable Part No.
P3-08NAS	20	Feedthrough	ZL-RTB20	ZL-P3-CBL20 *
P3-08ND3S	20	Feedthrough		
P3-16NA	20	Feedthrough		ZL-P3-CBL20-1L ZL-P3-CBL20-2L
P3-16ND3	20	Feedthrough		
		Sensor	ZL-LTB16-24-1	
P3-32ND3	40	Feedthrough	ZL-RTB40	ZL-CBL40 ZL-CBL40-1 ZL-CBL40-2
		Sensor	ZL-LTB32-24-1	
P3-64ND31	40	Feedthrough	ZL-RTB40	
		Sensor	ZL-LTB32-24-1	

Productivity3000 CPU Analog In Module *ZIP*Link Selector

CPU		ZIPLink		
Analog Module	# of Terms	Component	Module	Cable
P3-04ADS	20	Feedthrough	ZL-RTB20	ZL-P3-CBL20-1L ZL-P3-CBL20-2L
P3-08AD	20	Feedthrough		
P3-16AD-1	20	Feedthrough		
P3-16AD-2	20	Feedthrough		
P3-08RTD[2]	Matched Only	See Note 2		
P3-08THM[2]	T/C Wire Only	See Note 2		
P3-04DA	20	Feedthrough	ZL-RTB20	ZL-P3-CBL20-1L ZL-P3-CBL20-2L
P3-08DA-1	20	Feedthrough		
P3-08DA-2	20	Feedthrough		
P3-16DA-1	20	Feedthrough		
P3-16DA-2	20	Feedthrough		
P3-8AD4DA-1	20	Feedthrough		
P3-8AD4DA-2	20	Feedthrough		

Productivity3000 CPU Specialty Module *ZIP*Link Selector

CPU		ZIPLink		
Input Module	# of Terms	Component	Module Part No.	Cable Part No.
P3-HSI	40	Feedthrough	ZL-RTB40	ZL-CBL40-S ZL-CBL40-1S ZL-CBL40-2S
P3-HSO				

Note: ***ZIP***Link Connector Modules specifications follow the Compatibility Matrix tables. ***ZIP***Link Cables specifications are at the end of this ***ZIP***Link section.

Productivity3000 CPU Output Module *ZIP*Link Selector

CPU		ZIPLink		
Output Module	# of Terms	Component	Module Part No.	Cable Part No.
P3-08TAS	20	Feedthrough	ZL-RTB20	ZL-P3-CBL20 *
P3-08TD1S	20	Feedthrough		ZL-P3-CBL20-1L ZL-P3-CBL20-2L
P3-08TD2S	20	Feedthrough		
P3-08TRS	20	Feedthrough		ZL-P3-CBL20 ZL-P3-CBL20-1 ZL-P3-CBL20-2
P3-16TA	20	Feedthrough		
		Fuse		
P3-16TD1	20	Feedthrough		
		Fuse	ZL-RFU20[4]	
		Relay (sinking)	ZL-RRL16-24-1	
P3-16TD2	20	Feedthrough	ZL-RTB20	
		Fuse	ZL-RFU20[4]	
		Relay (sourcing)	ZL-RRL16-24-2	
P3-16TR	20	Feedthrough	ZL-RTB20	
		Fuse	ZL-RFU20[4]	
P3-08TRS-1[3]	20	Feedthrough	ZL-RTB20	
		Fuse	ZL-RFU20[4]	
P3-32TD1	40	Feedthrough	ZL-RTB40	ZL-CBL40 ZL-CBL40-1 ZL-CBL40-2
		Fuse	ZL-RFU40[4]	
P3-32TD2	40	Feedthrough	ZL-RTB40	
		Fuse	ZL-RFU40[4]	
P3-64TD1[1]	40	Feedthrough	ZL-RTB40	
		Fuse	ZL-RFU40[4]	
P3-64TD2[1]	40	Feedthrough	ZL-RTB40	
		Fuse	ZL-RFU40[4]	

** Select the cable length by replacing the * with: Blank = 0.5m, -1 = 1.0m, or -2 = 2.0m.*

1 The P3-64ND3, P3-64TD1 and P3-64TD2 modules have two 32-point connectors and require two ZIPLink cables and two ZIPLink connector modules.

2 These modules are not supported by the ZIPLink wiring system.

3 The P3-08TRS-1 output module is derated not to exceed 2A per point maxiumum when used with the ZIPLink wiring system.

4 Note: Fuses (5 x 20 mm) are not included. See Edison Electronic Fuse section for (5 x 20 mm) fuse. S500 and GMA electronic circuit protection for fast-acting maximum protection. S506 and GMC electronic circuit protection for time-delay performance. Ideal for inductive circuits.
To ensure proper operation, do not exceed the voltage and current rating of ZIPLink module. ZL-RFU20 = 2A per circuit; ZL-RFU40 = 400 mA per circuit.

I/O Modules

A variety of discrete, analog and specialty I/O modules are available for use in local, expansion, and remote I/O bases. Specifications for each module are on the following pages.

A filler module is available for unused I/O module slots (part number P3-FILL).

Discrete Input Modules

Productivity3000 Discrete Input Modules			
Part Number	**Number of Inputs**	**Description**	**Price**
P3-16SIM	16	Input Simulator Module	$214.00
P3-08ND3S	8	Isolated Sinking/Sourcing DC Input	$109.00
P3-16ND3	16	Sinking/Sourcing DC Input	$162.00
P3-32ND3	32	Sinking/Sourcing DC Input	$218.00
P3-64ND3	64	Sinking/Sourcing DC Input	$284.00
P3-08NAS	8	Isolated AC Input	$136.00
P3-16NA	16	AC Input	$167.00

*ZIPLink required.

Analog I/O Modules

Productivity3000 Analog Input Modules			
Part Number	**Number of Channels**	**Description**	**Price**
P3-04ADS	4	Isolated Analog Input	$796.00
P3-08AD	8	Analog Input	$432.00
P3-16AD-1	16	Analog Input (Current)	$589.00
P3-16AD-2	16	Analog Input (Voltage)	$576.00
P3-08RTD	8	Analog RTD Input	$639.00
P3-08THM	8	Analog Thermocouple Input	$810.00

Productivity3000 Analog Output Modules			
Part Number	**Number of Channels**	**Description**	**Price**
P3-04DA	4	Analog Output	$494.00
P3-08DA-1	8	Analog Output (Current)	$857.00
P3-08DA-2	8	Analog Output (Voltage)	$798.00
P3-16DA-1	16	Analog Output (Current)	$1,022.00
P3-16DA-2	16	Analog Output (Voltage)	$1,002.00

Productivity3000 Analog Input/Output Modules			
Part Number	**Number of Channels**	**Description**	**Price**
P3-8AD4DA-1	8/4	Analog Input/Output (Current)	$658.00
P3-8AD4DA-2	8/4	Analog Input/Output (Voltage)	$679.00

Specialty Modules

Productivity3000 Specialty Modules			
Part Number	**Number of Channels**	**Description**	**Price**
P3-HSI	2	High-Speed Pulse Input	$619.00
P3-HSO*	2	High-Speed Output	$646.00
P3-SCM	4 ports	Serial Communications Module	$523.00

*ZIPLink required.

Discrete Output Modules

Productivity3000 Discrete Output Modules			
Part Number	**Number of Outputs**	**Description**	**Price**
P3-08TD1S	8	Isolated Sinking Output	$164.00
P3-08TD2S	8	Isolated Sourcing Output	$169.00
P3-16TD1	16	Sinking Output	$175.00
P3-16TD2	16	Sourcing Output	$180.00
P3-32TD1*	32	Sinking Output	$228.00
P3-32TD2*	32	Sourcing Output	$218.00
P3-64TD1*	*64	Sinking Output	$319.00
P3-64TD2*	*64	Sourcing Output	$289.00
P3-08TAS	8	Isolated AC Output	$212.00
P3-16TA	16	AC Output	$225.00
P3-08TRS	8	Isolated Relay Output	$187.00
P3-08TRS-1	8	Isolated Relay Output	$213.00
P3-16TR	16	Relay Output	$190.00

*ZIPLink required.

Module Installation Procedure

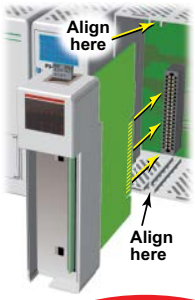

WARNING: *DO NOT APPLY FIELD POWER UNTIL THE FOLLOWING STEPS ARE COMPLETED. SEE HOT-SWAPPING PROCEDURE FOR EXCEPTIONS.*

Step One: Align circuit card with slot and press firmly to seat module into connector.

Step Two: Pull top and bottom locking tabs toward module face. Click indicates lock is engaged.

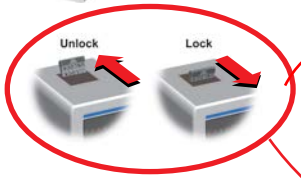

Step Three: Attach field wiring using optional terminal block or ***ZIP***Link wiring system and install cover.

To install or remove terminal block cover, press middle to flex cover.

WARNING: *EXPLOSION HAZARD – DO NOT CONNECT OR DISCONNECT CONNECTORS OR OPERATE SWITCHES WHILE CIRCUIT IS LIVE UNLESS THE AREA IS KNOWN TO BE NON-HAZARDOUS. DO NOT HOT-SWAP MODULES UNLESS THE AREA IS KNOWN TO BE NON-HAZARDOUS.*