Connection Cables - Sensor and Signal

M12 A-coded Female with LED Indication to Male Cables

Features

- 90-degree M12 female plug with LED indication on one end and axial male plug on the other end
- 0.3 m [0.98 ft], 0.6 m [1.97 ft], 1m [3.28 ft], 2m [6.5 ft], 5m [16.4 ft], and 10m [32.8 ft] cable lengths
- LED indication for 10–36 VDC PNP sensors only
- PUR (polyurethane) jacketed cable for app with exposure to oil and dynamic applicati requiring more flexibility

M12 A-coded Female with LED Indication to Male Cables						
Part Number	*Price*	*Length*	*Number of Wires*	*Connectors*	*LED*	*Cable Jacket Material*
*EVC322**	$14.00	0.3 m [0.98 ft]	4	90-degree female, axial male	Yes	PUR
*EVC323**	$15.50	0.6 m [1.97 ft]				
*EVC324**	$16.00	1m [3.28 ft]				
*EVC325**	$18.00	2m [6.5 ft]				
*EVC326**	$21.50	5m [16.4 ft]				
*EVC327**	$26.50	10m [32.8 ft]				

***Note: LED for 10–36 VDC PNP devices only.**
Do not use with NPN or analog output devices.
Do not use when white wire (Pin 2) is used for selection of a sensor function.
Do not use when emitter has check function.

Wiring

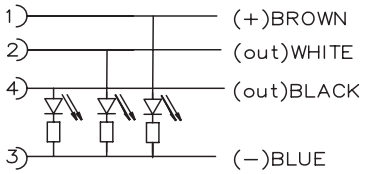

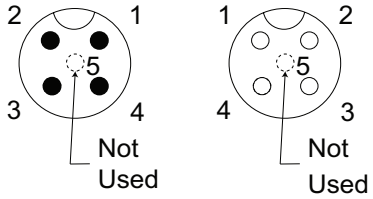

M12 A-coded Female with LED Indication to Male Cables Specifications		
Operating Voltage	10-36 VDC	
Max Voltage - UL Rating	36VDC	
Max Current Per Contact	4A	
Protection Degree	IP65 / IP67 / IP68 / IP69K	
Nut Material	Nickel plated Brass	
Cable Jacket Insulation Material	Polyurethane (PUR)	
Contacts Material	Gold plated	
Tightening Torque	0.6 to 1.5 N·m [0.4 to 1.1 ft·lb]	
Conductors Cross Section	0.34 mm² [22AWG]	
Ø Outer Cable For PUR	4.3 mm [0.17 in]	
Temperature Range Stationary Use	-25 to 90°C [-13 to 194°F]	
Temperature Range - Flexible Use	-25 to 90°C [-13 to 194°F]	
Min Bend Radius	Stationary use: 5 x cable diameter; Flexible use: 10 x cable diameter	
LED Current Loading	10V input Brown wire LED: 1.7 mA White and/or Black LED: 0.9 mA	36V input Brown wire LED: 7.3 mA White and/or Black LED: 4.7 mA
Switching Status LED	2 x Yellow	
Function Display Power LED	1 x Green	
*Approvals**	cULus, CE, UKCA	

***To obtain the most current agency approval information, see the Agency Compliance & Certifications Checklist section on the specific part number's web page.**

Dimensions

mm [inches]

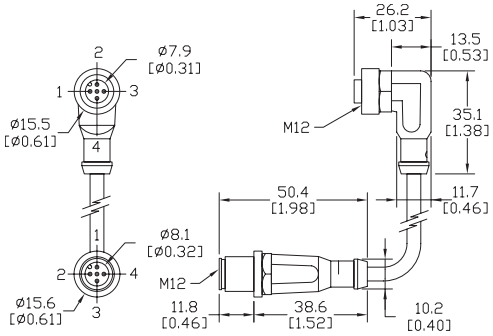

UL Reference	
EVC322	VDOAH043MSS00.3H04STGH040MSS
EVC323	VDOAH043MSS00.6H04STGH040MSS
EVC324	VDOAH043MSS0001H04STGH040MSS
EVC325	VDOAH043MSS0002H04STGH040MSS
EVC326	VDOAH043MSS0005H04STGH040MSS
EVC327	VDOAH043MSS0010H04STGH040MSS