*DURA*PULSE GS4 AC Drives – Introduction

*DURA*PULSE GS4 AC Drives																						
Motor Rating	HP	1	2	3	5	7.5	10	15	20	25	30	40	50	60	75	100	125	150	175	215	250	300
	kW	0.75	1.5	2.2	3.7	5.5	7.5	11	15	18.5	22	30	37	45	55	75	90	110	132	160	185	220
230V Single-Phase Input / 230V Three-Phase Output		✓	✓	✓	✓	✓	✓	✓	✓	✓												
230V Three-Phase Input/Output		✓	✓	✓	✓	✓	✓	✓	✓	✓	✓	✓	✓	✓	✓	✓						
460V Three-Phase Input/Output		✓	✓	✓	✓	✓	✓	✓	✓	✓	✓	✓	✓	✓	✓	✓	✓	✓	✓	✓	✓	✓

Overview

The *DURA*PULSE GS4 series of AC drives includes many of the same standard features as our GS family of drives including dynamic braking, PID, removable keypad, and RS-485 Modbus communication.

The GS4 drive expands the *DURA*PULSE family by adding single-phase input capability (ALL 230VAC drives can be supplied single-phase), a built-in PLC, serial BACnet, and optional EtherNet/IP and ModTCP cards. GS4 QuickStart menus simplify configuration by consolidating the most-often-used parameters into concise groups.

*DURA*PULSE GS4 AC drives also offer sensorless vector control for improved speed regulation. The smart keypad is designed with defaults to quickly allow you to configure the drive, set the speed, start and stop the drive, and monitor critical parameters of your application. In addition, up to four drive configurations can be stored in the keypad, and transferred to additional *DURA*PULSE GS4 drives of the same model. Users can also store up to 32 parameters of their choice in a custom Quick-Start menu.

*DURA*PULSE GS4 offers three analog inputs, two analog outputs, one frequency output, ten digital inputs, two digital outputs, two SPDT relay outputs, and two STO inputs. All of the analog and digital I/O (except the Start/Stop and STO inputs) can be configured for a wide variety of input or output functions. Three option cards expand the I/O offering with a relay output card, an AC input card, and a combo DC I/O card.

Features

- Wide Offering from 1 to 300 hp
- Single-Phase/Three-Phase 230VAC Three-Phase 460VAC
- Single-Phase UL Ratings – 230VAC input for 1 to 100 hp models (see selection tables for derated output)
- Dual Rating Design – CT/VT Ratings (Light & Heavy Duty)
- Flexible Carrier Frequency to 15khz and Output Frequency to 599Hz
- STO – Safe Torque Off (TUV Certified)
- Built-in PLC to support up to 10k steps
- Free downloadable software for Drive Configuration and PLC Programming
- Field-upgradable Firmware via USB port (Drive, Keypad, & Communication Option Cards)
- Hot-Pluggable LCD Text-Based Keypad (IP20/ NEMA 1) can be remotely mounted
- Embedded Quick-Start Menus
- Local/Remote control mode selection from the Keypad or digital/comm input with Hand/ Off/Auto Control
- Display Units of Measure of your choice (GPM, FPM, etc.)
- Momentary Power Loss Restarts
- 100kA Short Circuit Current Rating
- Built-In DC Choke (some models)
- Flange-Mount Capability for frame sizes A to F (1 to 215 hp)
- Conduit Box(s) for NEMA 1 (Frame sizes D0 to G)
- Expanded I/O capability – 110V Inputs, Relay Outputs, combo DC I/O card
- Analog I/O – Configurable 3 Inputs and 2 Outputs
- Auto Speed Search capability
- Multi-Motor (Motor#1,#2) Control
- Dynamic Braking – Optional Dynamic Braking Units and Comprehensive offering of Resistors
- PID Controller – Including Sleep and Wake
- Password Protection
- RTD and/or PTC Input Motor Protection
- Parameter Organization similar to GS3 – GS3 Operational (External User PLC) control will work with minimal changes required.
- Calendar function allows a user to program the PLC with ON/OFF control in chronological order, daylight savings time, etc.
- Modularized design eases maintenance and expansion, including quick replacement of fans
- High speed communication interfaces with MODBUS RTU and BACnet protocols built in, with optional communication cards: MODBUS TCP, EtherNet/IP
- Circuit boards have conformal coating for improved environmental tolerance
- Excellent heat-sink design; able to operate at 50°C ambient temperature
- Fire Mode – Run fire mode during emergencies to have uninterrupted smoke removal and system pressure
- Multi-pump control: fixed quantity, fixed displacement, and fixed time-circulating control; able to control up to 8 pumps (Optional multi-control relay output card is required.)
- Two-year warranty
- CE, TUV, UL, cUL

Accessories

- AC line reactors
- EMI filters
- RF filter
- Braking resistors
- Braking units (for models 20hp and above)
- Fuses
- Conduit boxes
- Flange-Mount Kits
- Replacement cooling fans
- Replacement keypad (and remote-mount bezel kit)
- I/O Option Cards
- EtherNet/IP comm card
- Modbus TCP comm card
- Four and eight-port RS-485 multi-drop termination boards
- GSoft2 drive configuration software
- GSLogic PLC programming software
- USB-485M – USB to RS-485 PC adapter (see "Communications Products" chapter for detailed information)
- Detailed descriptions and specifications for GS accessories are available in the "GS/ DURApulse Accessories" section.

Typical Applications

- Conveyors
- Compressors
- Material handling
- Extruding
- Grinding
- Shop tools
- Fans
- Pumps
- HVAC
- Mixing

DURAPULSE GS4 AC Drives – Selection

Selecting the Proper Drive Rating

Selecting the Proper Drive Rating

Determine Motor Voltage and Full-Load Amperage (FLA)

Motor voltage and FLA are located on the nameplate of the motor.
NOTE: FLA of motors that have been rewound may be higher than stated.

Determine Motor Overload Requirements

Many applications experience temporary overload conditions due to starting requirements or impact loading. Most AC drives are designed to operate at 150% overload for 60 seconds. If the application requires an overload greater than 150% or longer than 60 seconds, the AC drive must be oversized.
NOTE: Applications that require replacement of existing motor starters with AC drives may require up to 600% overload.

Determine Application Type: Constant Torque or Variable Torque

This torque requirement has a direct effect on which drive to select. Variable Torque applications are generally easier to start; typically fans and pumps. Most other applications outside fans and pumps fall into the Constant Torque category (machine control, conveyors, etc.). If you are unsure of the application, assume Constant Torque. The specification, derating, and selection tables (begining pg.tGSX-94) are generally segregated by Constant Torque and Variable Torque.

Installation Altitude

AC drives rely on air flow for cooling. As the altitude increases, the air becomes less dense, and this drop in air density decreases the cooling properties of the air. Therefore, the AC drive must be oversized to compensate for the decrease in cooling. GS4 drives are designed to operate at 100% capacity at altitudes up to 1000 meters.
NOTE: For use above 1000m, the AC drive must be derated as described below.

Derate Output Current Based on Altitude Above 1000 Meters

- If the AC drive is installed at an altitude of 0–1000m, follow normal operation restrictions.
- If installed at an altitude of 1000–3000m, decrease 1% of the rated current or lower 0.5°C of temperature for every 100m increase in altitude.
- Maximum altitude for Corner Grounded is 2000m.

GS4 Derating for Altitude

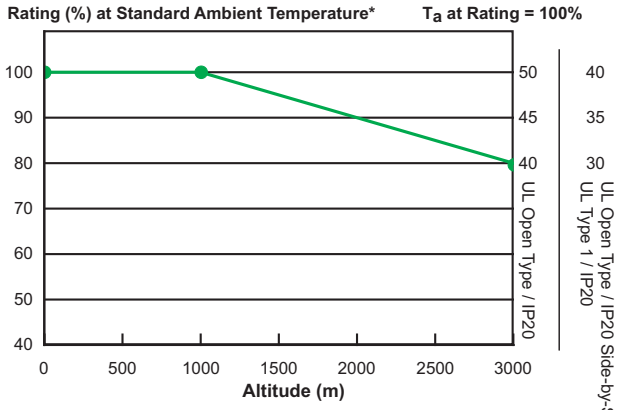

*Standard Ambient Temperature = 50°C for UL Open Type / IP20
*Standard Ambient Temperature =
40°C for UL Type 1 / IP 20 & UL Open Type / IP20 Side-by-Side

(continued next page)

DURAPULSE GS4 AC Drives – Selection

Selecting the Proper Drive Rating (continued from previous page)

Determine Maximum Enclosure Internal Temperature

AC drives generate a significant amount of heat and can cause the internal temperature of an enclosure to exceed the rating of the GS4 drive, even when the ambient temperature is less than 104°F (40°C). Enclosure ventilation and/or cooling may be required to reduce maximum internal temperature to 104°F (40°C) or less. Ambient temperature measurements/calculations should be made for the maximum expected temperature. When permissible, flange mounting the AC drive (mounting with the drive heatsink in open ambient air) can greatly reduce heating in the enclosure.

NOTE: For use above 104°F (40°C), the AC drive must be derated as described below.

Derate Output Current Based on Temperature Above 104°F (40°C) or 122°F (50°C)

Drive Derating by Temperature and Protection Level

*Protection Level **	*Derating*
UL Type I / IP20	When the GS4 drive is operating at rated current, the ambient temperature has to be between -10°C and +40°C. When ambient temperature exceeds 40°C, decrease the rated current by 2% for every 1°C temperature increase. Maximum allowable temperature is 60°C.
UL Open Type ** / IP00/IP20	When the GS4 drive is operating at rated current, the ambient temperature has to be between -10°C and +50°C. When ambient temperature exceeds 50°C, decrease the rated current by 2% for every 1°C temperature increase. Maximum allowable temperature is 60°C.

** For more information about environmental ratings, refer to the "Operating Temperature and Protection Level" table (pg.tGSX-110).*
*** Open Type temperature ratings apply to GS4 frame sizes A–C with top covers removed, and frame sizes D0–G without conduit boxes (pg.tGSX-110).*

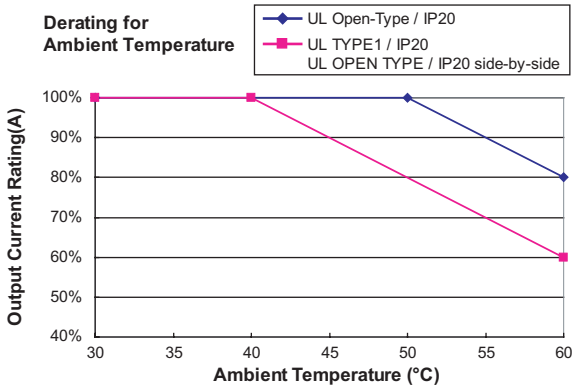

(continued next page)

DURAPULSE GS4 AC Drives – Selection

Selecting the Proper Drive Rating (continued from previous page)

Derate Output Current Based on Carrier Frequency (if necessary)

Carrier Frequency Effects

AC Drives rectify the incoming 50 or 60Hz line power resulting in DC power at 0Hz. The resulting DC power is then pulse-width modulated and supplied to the motor by the drive's power electronics. IGBTs invert the DC power, simulating a sine wave at the desired frequency (that's what allows variable speed in AC induction motors). The speed at which the IGBTs are turned ON and OFF is called Carrier Frequency. In GS4 drives, the Carrier Frequency can range from 2kHz to 15kHz. Though Carrier Frequency can be adjusted, there are trade-offs between High Carrier Frequencies and Low Carrier Frequencies.

Benefits of Higher Carrier Frequencies:

- Better efficiency (lower harmonic losses) in the motor
- Lower audible noise

Benefits of Lower Carrier Frequencies:

- Better efficiency in the drive
- Lower EMI (electrical noise)
- Reduced reflective wave peak voltage

As a general rule, the Carrier Frequency should be set as low as possible without creating unacceptable audible noise in the motor. Smaller systems can have higher Carrier Frequencies, but larger drives (>20 or 30hp) should not have Carrier Frequencies set higher than 6kHz. Heavy Duty applications typically run around 2–4 kHz.

The following Variable Torque (VT) and Constant Torque (CT) derating curves are for drives with 3-phase input power. The 230VAC, CT curves also apply equally whether the drive is supplied with 3-phase or 1-phase input power.

230V Variable Torque Carrier Frequency Derating

For 230V Variable Torque
50°C UL Open Type
40°C UL Type 1 or Open Type side-by-side

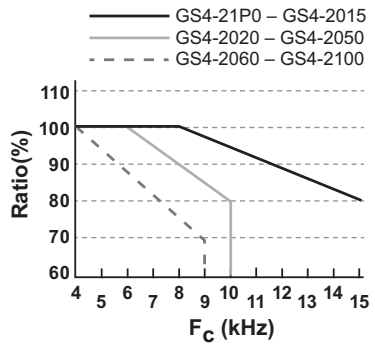

For 230V Variable Torque
40°C UL Open Type
30°C UL Type 1 or Open Type side-by-side

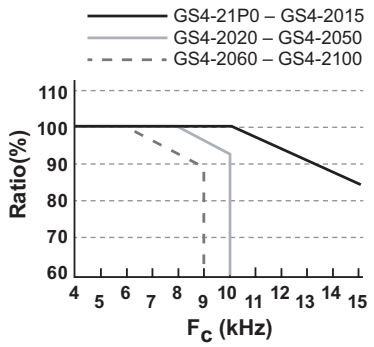

460V Variable Torque Carrier Frequency Derating

For 460V Variable Torque
50°C UL Open Type
40°C UL Type 1 or Open Type side-by-side

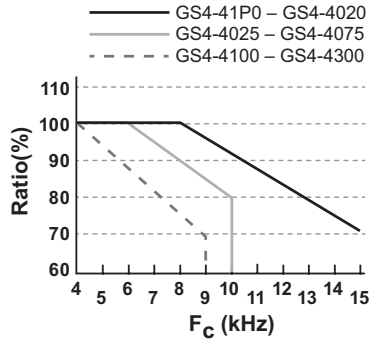

For 460V Variable Torque
40°C UL Open Type
30°C UL Type 1 or Open Type side-by-side

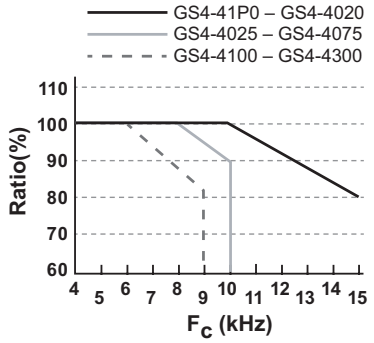

(continued next page)

DURAPULSE GS4 AC Drives – Selection

Selecting the Proper Drive Rating (continued from previous page)

230V Constant Torque Carrier Frequency Derating

For 230V Constant Torque
50°C UL Open Type
40°C UL Type 1 or Open Type side-by-side

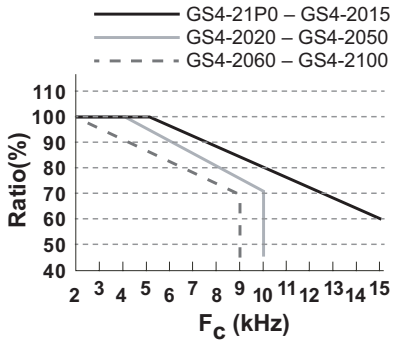

For 230V Constant Torque
40°C UL Open Type
30°C UL Type 1 or Open Type side-by-side

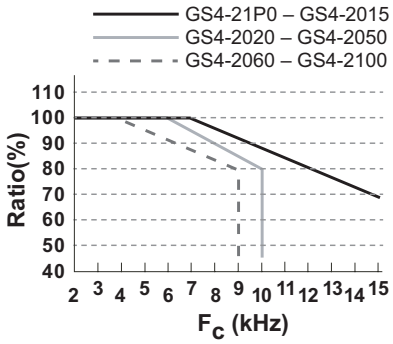

460V Constant Torque Carrier Frequency Derating

For 460V Constant Torque
50°C UL Open Type
40°C UL Type 1 or Open Type side-by-side

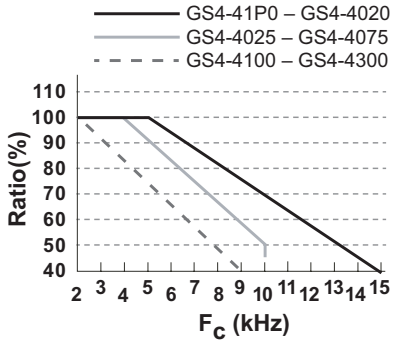

For 460V Constant Torque
40°C UL Open Type
30°C UL Type 1 or Open Type side-by-side

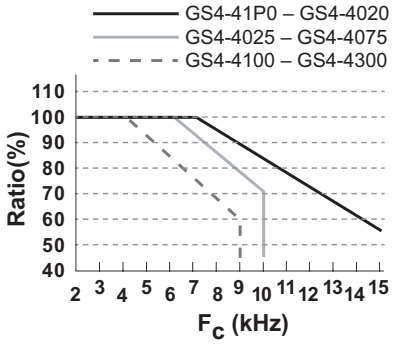

DURAPULSE GS4 AC Drives – Selection Specs

GS4 Drive Model Selection Tables

230V Class GS4 Specifications – Constant & Variable Torque Frame Sizes A, B (1hp–15hp)										
Model Name				GS4-21P0	GS4-22P0	GS4-23P0	GS4-25P0	GS4-27P5	GS4-2010	GS4-2015
Price				$525.00	$578.00	$653.00	$739.00	$835.00	$932.00	$1,125.00
Frame Size				A				B		
Output Rating	Constant Torque (CT)	Max Motor Output (1-phase / 3-phase)	hp	0.5 / 1	0.75 / 2	1 / 3	2 / 5	3 / 7.5	3 / 10	5 / 15
			kW	0.37 / 0.75	0.55 / 1.5	0.75 / 2.2	1.5 / 3.7	2.2 / 5.5	2.2 / 7.5	3.7 / 11
		Rated Output Capacity (1-phase / 3-phase)	kVA	1.0 / 1.9	1.3 / 2.8	2.0 / 4.0	3.2 / 6.4	4.4 / 9.6	4.4 / 12	6.8 / 19
		Rated Output Current (1-phase / 3-phase)	A	2.4 / 4.8	3.2 / 7.1	5 / 10	8 / 16	11 / 24	11 / 31	17 / 47
		Carrier Frequency	kHz	2 to 6						
	Variable Torque (VT)	Max Motor Output	hp	1	2	3	5	7.5	10	15
			kW	0.75	1.5	2.2	3.7	5.5	7.5	11
		Rated Output Capacity	kVA	2.0	3.2	4.4	6.8	10	13	20
		Rated Output Current	A	5	8	11	17	25	33	49
		Carrier Frequency	kHz	2 to 15						
Input Rating *	CT	Rated Input Current * (1-phase / 3-phase)	A	6.4 / 6.1	9.7 / 11	15 / 15	20 / 18.5	26 / 26	26 / 34	40 / 50
	VT			6.4	12	16	20	28	36	52
	Rated Voltage/Frequency			1-phase/3-phase 200–240 VAC (-15% to +10%), 50/60Hz						
	Operating Voltage Range			170–265 VAC						
	Frequency Tolerance			47–63 Hz						
	Short Circuit Withstand (SCCR) (A, rms symmetrical)			100kA						
IE2 Efficiency - Relative Power Loss				3.1%	2.8%	2.5%	2.1%	2.3%	2.1%	2.2%
Weight (kg [lb])				2.6 [5.7]				5.4 [11.9]		
Watt Loss @ 100% I (W) **				61	88	115	159	264	335	529
Cooling Method				natural convection	fan					
Dynamic Braking				built in						
DC Choke				optional						
EMI Filter				optional						

** For Use With Three-Phase Motors Only. If 3-phase power source is non-symmetrical, refer to "Circuit Connections – RFI Jumper" in the GS4 AC Drives User Manual, Chapter 2 (www.automationdirect.com). Please refer to "GS4 DURApulse Accessories – Fusing" (pg.tGSX-164) for input fusing information.*

*** Watt loss is reduced if the GS4 drive is flange mounted (frame sizes A through F).*

DURAPULSE GS4 AC Drives – Selection Specifications

230V Class GS4 Specifications – Constant & Variable Torque Frame Sizes C–E (7.5 hp–100hp)											
Model Name				GS4-2020	GS4-2025	GS4-2030	GS4-2040	GS4-2050	GS4-2060	GS4-2075	GS4-2100
Price				$1,586.00	$1,723.00	$1,953.00	$3,449.00	$3,961.00	$5,282.00	$5,932.00	$6,913.00
Frame Size				C			D		E		
Output Rating	Constant Torque (CT)	Max Motor Output (1-phase / 3-phase)	hp	7.5/20	10/25	10/30	10/40	10/50	15/60	20/75	25/100
			kW	5.5/15	7.5/18.5	7.5/22	7.5/30	7.5/37	11/45	15/55	18.5/75
		Rated Output Capacity (1-phase / 3-phase)	kVA	10/25	13/28	13/34	13/45	13/55	20/68	26/81	30/96
		Rated Output Current (1-phase / 3-phase)	A	25/62	33/71	33/86	33/114	33/139	49/171	65/204	75/242
		Carrier Frequency	kHz	2 to 6							
	Variable Torque (VT)	Max Motor Output	hp	20	25	30	40	50	60	75	100
			kW	15	18.5	22	30	37	45	55	75
		Rated Output Capacity	kVA	26	30	36	48	58	72	86	102
		Rated Output Current	A	65	75	90	120	146	180	215	255
		Carrier Frequency	kHz	2 to 10			2 to 6				
Input Rating *	CT	Rated Input Current * (1-phase / 3-phase)	A	58/68	76/78	76/95	63/118	63/136	94/162	124/196	143/233
	VT			72	83	99	124	143	171	206	245
	Rated Voltage/Frequency			1-phase/3-phase 200–240 VAC (-15% to +10%), 50/60Hz							
	Operating Voltage Range			170–265 VAC							
	Frequency Tolerance			47–63 Hz							
	Short Circuit Withstand (SCCR) (A, rms symmetrical)			100kA							
IE2 Efficiency - Relative Power Loss				2.3%	2.4%	2.3%	1.9%	2.1%	1.9%	1.9%	2.7%
Weight (kg [lb])				9.8 [21.6]			38.5 [84.9]		64.8 [143]		
Watt Loss @ 100% I (W) **				616	733	865	1099	1311	1518	1709	2139
Cooling Method				fan							
Dynamic Braking				built in			optional Dynamic Braking Unit (DBU)				
DC Choke				optional			built in				
EMI Filter				optional							

** For Use With Three-Phase Motors Only. If 3-phase power source is non-symmetrical, refer to "Circuit Connections – RFI Jumper" in the GS4 AC Drives User Manual, Chapter 2 (www.automationdirect.com). Please refer to "GS4 DURApulse Accessories – Fusing" (pg.tGSX-164) for input fusing information.*

*** Watt loss is reduced if the GS4 drive is flange mounted (frame sizes A through F).*

DURAPULSE GS4 AC Drives – Selection Specifications

460V Class GS4 Specifications – Constant & Variable Torque Frame Sizes A, B (1hp–20hp)											
Model Name				GS4-41P0	GS4-42P0	GS4-43P0	GS4-45P0	GS4-47P5	GS4-4010	GS4-4015	GS4-4020
Price				$535.00	$578.00	$643.00	$750.00	$835.00	$920.00	$1,095.00	$1,388.00
Frame Size				A					B		
Output Rating	**Constant Torque (CT)**	**Max Motor Output**	**hp**	1	2	3	5	7.5	10	15	20
			kW	0.75	1.5	2.2	3.7	5.5	7.5	11	15
		Rated Output Capacity	**kVA**	2.3	3.0	4.5	6.5	8.8	14	18	24
		Rated Output Current	**A**	2.9	3.8	5.7	8.1	11	17	23	30
		Carrier Frequency	**kHz**	2 to 6							
	Variable Torque (VT)	**Max Motor Output**	**hp**	1	2	3	5	7.5	10	15	20
			kW	0.75	1.5	2.2	3.7	5.5	7.5	11	15
		Rated Output Capacity	**kVA**	2.4	3.2	4.8	7.2	9.6	14	19	25
		Rated Output Current	**A**	3	4	6	9	12	18	24	32
		Carrier Frequency	**kHz**	2 to 15							
Input Rating *	**CT**	**Rated Input Current**	**A**	4.1	5.6	8.3	13	16	19	25	33
	VT			4.3	5.9	8.7	14	17	20	26	35
	Rated Voltage/Frequency			3-phase 380–480 VAC (-15% to +10%), 50/60Hz							
	Operating Voltage Range			323–528 VAC							
	Frequency Tolerance			47–63 Hz							
	Short Circuit Withstand (SCCR) (A, rms symmetrical)			100kA							
IE2 Efficiency - Relative Power Loss				2.6%	2.3%	2.2%	2.0%	1.9%	2.1%	2.0%	1.8%
Weight (kg [lb])				2.6 [5.7]					5.4 [11.9]		
Watt Loss @ 100% I (W) **				59	74	104	141	180	292	380	518
Cooling Method				natural convection		fan					
Dynamic Braking				built in							
DC Choke				optional							
EMI Filter				optional							

** For Use With Three-Phase Motors Only.*
If 3-phase power source is non-symmetrical, refer to "Circuit Connections – RFI Jumper" in the GS4 AC Drives User Manual, Chapter 2 (www.automationdirect.com).
Please refer to "GS4 DURApulse Accessories – Fusing" (pg.tGSX-164) for input fusing information.
*** Watt loss is reduced if the GS4 drive is flange mounted (frame sizes A through F).*

DURAPULSE GS4 AC Drives – Selection Specifications

460V Class GS4 Specifications – Constant & Variable Torque Frame Sizes C, D0, D (25hp–100hp)										
Model Name				GS4-4025	GS4-4030	GS4-4040	GS4-4050	GS4-4060	GS4-4075	GS4-4100
Price				$1,674.00	$1,914.00	$2,406.00	$2,907.00	$3,400.00	$3,942.00	$5,400.00
Frame Size				C			D0		D	
Output Rating	Constant Torque (CT)	Max Motor Output	hp	25	30	40	50	60	75	100
			kW	18.5	22	30	37	45	55	75
		Rated Output Capacity	kVA	29	34	45	55	69	84	114
		Rated Output Current	A	36	43	57	69	86	105	143
		Carrier Frequency	kHz	2 to 6						
	Variable Torque (VT)	Max Motor Output	hp	25	30	40	50	60	75	100
			kW	18.5	22	30	37	45	55	75
		Rated Output Capacity	kVA	30	36	48	58	73	88	120
		Rated Output Current	A	38	45	60	73	91	110	150
		Carrier Frequency	kHz	2 to 10						
Input Rating *	CT	Rated Input Current	A	38	45	60	70	96	108	149
	VT			40	47	63	74	101	114	157
	Rated Voltage/Frequency			3-phase 380–480 VAC (-15% to +10%), 50/60Hz						
	Operating Voltage Range			323–528 VAC						
	Frequency Tolerance			47–63 Hz						
	Short Circuit Withstand (SCCR) (A, rms symmetrical)			100kA						
IE2 Efficiency - Relative Power Loss				1.6%	1.6%	1.6%	1.6%	1.6%	1.4%	1.3%
Weight (kg [lb])				9.8 [21.6]			27.0 [59.5]		38.5 [84.9]	
Watt Loss @ 100% I (W) **				507	635	866	993	1147	1413	1742
Cooling Method				fan						
Dynamic Braking				built in			optional Dynamic Braking Unit (DBU)			
DC Choke				optional			built in			
EMI Filter				optional						

** For Use With Three-Phase Motors Only.*
If 3-phase power source is non-symmetrical, refer to "Circuit Connections – RFI Jumper" in the GS4 AC Drives User Manual, Chapter 2 (www.automationdirect.com).
Please refer to "GS4 DURApulse Accessories – Fusing" (pg.tGSX-164) for input fusing information.
*** Watt loss is reduced if the GS4 drive is flange mounted (frame sizes A through F).*

DURAPULSE GS4 AC Drives – Selection Specifications

460V Class GS4 Specifications – Constant & Variable Torque Frame Sizes E, F, G (125hp–300hp)									
Model Name				GS4-4125	GS4-4150	GS4-4175	GS4-4200	GS4-4250	GS4-4300
Price				$7,389.00	$8,315.00	$9,902.00	$11,338.00	$15,529.00	$18,129.00
Frame Size				E		F		G	
Output Rating	Constant Torque (CT)	Max Motor Output	hp	125	150	175	215	250	300
			kW	90	110	132	160	185	220
		Rated Output Capacity	kVA	136	167	197	235	280	348
		Rated Output Current	A	171	209	247	295	352	437
		Carrier Frequency	kHz	2 to 6					
	Variable Torque (VT)	Max Motor Output	hp	125	150	175	215	250	300
			kW	90	110	132	160	185	220
		Rated Output Capacity	kVA	143	175	207	247	295	367
		Rated Output Current	A	180	220	260	310	370	460
		Carrier Frequency	kHz	2 to 9					
Input Rating *	CT	Rated Input Current	A	159	197	228	285	361	380
	VT			167	207	240	300	380	400
	Rated Voltage/Frequency			3-phase 380–480 VAC (-15% to +10%), 50/60Hz					
	Operating Voltage Range			323–528 VAC					
	Frequency Tolerance			47–63 Hz					
	Short Circuit Withstand (SCCR) (A, rms symmetrical)			100kA					
IE2 Efficiency - Relative Power Loss				1.2%	1.2%	1.3%	1.3%	1.4%	1.5%
Weight (kg [lb])				64.8 [143]		86.5 [191]		134 [295]	
Watt Loss @ 100% I (W) **				2092	2599	3081	3783	4589	5772
Cooling Method				fan					
Dynamic Braking				optional					
DC Choke				built in					
EMI Filter				optional					

** For Use With Three-Phase Motors Only.*
If 3-phase power source is non-symmetrical, refer to "Circuit Connections – RFI Jumper" in the GS4 AC Drives User Manual, Chapter 2 (www.automationdirect.com).
Please refer to "GS4 DURApulse Accessories – Fusing" (pg.tGSX-164) for input fusing information.
*** Watt loss is reduced if the GS4 drive is flange mounted (frame sizes A through F; frame G is not capable of flange mounting).*

DURAPULSE GS4 AC Drives – General Specifications

GS4 General Specifications (Applicable to All Models)		
Control Characteristics	Control Method	1: V/F (V/Hz control); 2: SVC (sensorless vector control)
	Starting Torque	Up to 120% Variable Torque (VT) or 150% Constant Torque (CT) for one minute
	V/F Curve	4 point adjustable V/Hz curve and square curve
	Speed Response Ability	5Hz
	Torque Limit	VT: 170% output current CT: 180% output current
	Torque Accuracy	±5%
	Max Output Frequency (Hz)	230V series: 599.00 Hz (75hp & above: 400.00 Hz) 460V series: 599.00 Hz (125hp & above: 400.00 Hz)
	Output Frequency Accuracy	Digital command: ±0.01%, -10°C to +40°C Analog command: ±0.1%, 25±10°C
	Output Frequency Resolution	Digital command: 0.01Hz Analog command: (0.03) x (max output frequency) / 60Hz [±11 bit]
	Overload Tolerance	VT duty: rated output current is 120% for 60 seconds CT duty: rated output current is 150% for 60 seconds
	Frequency Setting Signal	+10V to -10V, 0 to 10V, 4–20mA, 0–20mA
	Accel/Decel Time	0.00–600.00 / 0.0–6000.0 seconds
	Main Control Function	Fault restart; Parameter copy; Dwell; BACnet communication; Momentary power loss ride-through; Speed search; Over-torque detection; Torque limit; 16-step speed (max); Accel/Decel time switch; S-curve accel/decel; 3-wire sequence; Auto-Tuning (rotational, stationary); Frequency upper/lower limit settings; Cooling fan on/off switch; Slip compensation; Torque compensation; JOG frequency; MODBUS communication (RS-485 RJ45, max 115.2 kbps); DC injection braking at start/stop; Smart stall; PID control (with sleep function); Energy saving control; Optional ModbusTCP or EtherNet/IP communication/control
	Fan Control	230V model GS4-2020 and above: PMW control 230V model GS4-2015 and below: ON/OFF switch control 460V model GS4-4025 and above: PMW control 460V model GS4-4020 and below: ON/OFF switch control
Protection Characteristics	Motor Protection	Electronic thermal relay protection
	Over-current Protection	For drive model 230V and 460V: Over-current protection for 240% rated current Current clamp: VT duty 170–175%; CT duty 180–185%
	Over-voltage Protection	230V: drive will stop when DC-BUS voltage exceeds 410V 460V: drive will stop when DC-BUS voltage exceeds 820V
	Over-temperature Protection	Built-in temperature sensor
	Stall Prevention	Independent stall prevention during acceleration, deceleration, and running
	Restart After Instantaneous Power Failure	Up to 20 seconds (parameter settable)
	Ground Leakage Current Protection	Leakage current is higher than 50% of rated current of the AC motor drive
	Hi-Pot Test	UL508C; EN 61800-5-1
	Conformal Coating	IEC-60721-3-3
Agency Approvals		CE, Reach, RoHS, TUV, cULus; (Accessories are CE; Agency approvals other than CE do not apply to accessory conduit box kits, fan kits, flange mount kits, and braking resistors.) *To obtain the most current agency approval information, see the Agency Approval Checklist section on the specific part number's web page.*

DURAPULSE GS4 AC Drives – Optional GS4-Specific Internal Accessories List

Accessories Available for GS4 AC Drives Only

GS4 AC Drives Software and Accessories Internal or Attached to GS4 Drive

Model Number	Frame Size	GS4 Drive Software	GS4 PLC Software	Drive Keypad*	Keypad Mounting Bezel	I/O Modules	Communication Modules	Conduit Boxes	Cooling Fans*	Flange Mount Kits
		pg.tGSX-103	pg.tGSX-104	pg.tGSX-105	pg.tGSX-105	pg.tGSX-101	pg.tGSX-102	pg.tGSX-108	230V pg.tGSX-106 460V pg.tGSX-107	pg.tGSX-109
GS4-21P0	A	GSOFT2	GSLOGIC	GS4-KPD	GS4-BZL	GS4-06CDD GS4-06NA GS4-06TR	GS4-CM-ENETIP GS4-CM-MODTCP	n/a	n/a	GS4-FMKIT-A
GS4-22P0									GS4-FAN-AM	GS4-FMKIT-1
GS4-23P0										
GS4-25P0										GS4-FMKIT-A
GS4-27P5	B							n/a	GS4-FAN-BM1 GS4-FAN-BB	GS4-FMKIT-B
GS4-2010									GS4-FAN-BM2 GS4-FAN-BB	
GS4-2015										
GS4-2020	C							n/a	GS4-FAN-CM GS4-FAN-CB1	GS4-FMKIT-C
GS4-2025										
GS4-2030										
GS4-2040	D**							GS4-CBX-D	GS4-FAN-DM GS4-FAN-DB	n/a
GS4-2050										
GS4-2060	E**							GS4-CBX-E	GS4-FAN-EM1 GS4-FAN-EB	n/a
GS4-2075										
GS4-2100									GS4-FAN-EM2 GS4-FAN-EB	
GS4-41P0	A							n/a	n/a	GS4-FMKIT-A
GS4-42P0										
GS4-43P0									GS4-FAN-AM	GS4-FMKIT-1
GS4-45P0										GS4-FMKIT-A
GS4-47P5										
GS4-4010	B							n/a	GS4-FAN-BM1 GS4-FAN-BB	GS4-FMKIT-B
GS4-4015									GS4-FAN-BM2 GS4-FAN-BB	
GS4-4020										
GS4-4025	C							n/a	GS4-FAN-CM GS4-FAN-CB2	GS4-FMKIT-C
GS4-4030										
GS4-4040										
GS4-4050	D0**							GS4-CBX-D0	GS4-FAN-D0M GS4-FAN-DB	n/a
GS4-4060										
GS4-4075	D**							GS4-CBX-D	GS4-FAN-DM GS4-FAN-DB	n/a
GS4-4100										
GS4-4125	E**							GS4-CBX-E	GS4-FAN-EM2 GS4-FAN-DB	n/a
GS4-4150										
GS4-4175	F**							GS4-CBX-F	GS4-FAN-FM GS4-FAN-FB	n/a
GS4-4200										
GS4-4250	G							GS4-CBX-G	GS4-FAN-GM	n/a
GS4-4300										

** Keypads and Cooling Fans are pre-installed and included with the GS4 Drives.*
They are field-replaceable and available for purchase separately as spare or replacement parts.
*** GS4 drives in D0, D, E and F frames can be flanged mounted and do not require a flange mount kit.*

Note: Refer to the page numbers shown above for more complete information about the accessory products.

GS4-Specific Optional Accessories – Input/Output Expansion Cards

Accessories Applicable Only to GS4 AC Drives

Please refer to the "GS/DURApulse AC Drives – Accessories " section for accessories applicable to multiple families of GS/DURApulse AC Drives, including GS4.

Input/Output Expansion Cards

Optional I/O cards allow additional inputs and outputs to be added to the GS4 internal I/O. (Only one I/O card can be installed at a time.)

GS4 *DURA*PULSE Drives Input/Output Expansion Cards

Part Number	Price	Description	Terminals	Specifications	Wire Size	Placement*	GS Drive
GS4-06CDD*	$33.50	DURAPULSE combination discrete I/O module, selectable sinking or sourcing 24VDC input, 24VDC output, 4-point input, 2-point output, 1 input common(s), 1 output common(s), 50mA resistive output current.	COM	(1) Common for Input Terminals	20~24 AWG	slot #3	GS4 – all
			DI10–DI13	(4) Discrete Inputs; selectable sinking or sourcing Internal power available: 24VDC ±5% 200mA, 5W External power: 24VDC (30V max, 19V min), 30W ON: activation 6.5mA @ ≥ 9VDC OFF: leakage 10μA ≤ 3VDC			
			DO10–DO11	(2) Discrete Outputs (photocoupler) Duty-cycle: 50% Max. output frequency: 100Hz Max. current: 50mA resistive Max. voltage: 48VDC			
			DOC	(1) Common for Output Terminals			
GS4-06NA*	$36.00	DURAPULSE discrete input module, sinking 120VAC input, 6-point input, 1 input common(s).	ACN	(1) AC power common for Input Terminal (Neutral)	20~24 AWG	slot #3	GS4 – all
			DI10–DI15	(6) Discrete Inputs; sinking Input voltage: 100–130 VAC Input frequency: 47–63 Hz Input impedance: 27kΩ Terminal response time: ON: 10ms OFF: 20ms			
GS4-06TR*	$55.00	DURAPULSE relay output module, Form A (SPST-NO) relays, 6-point output, 6 output common(s), 3 Amps resistive output current, 1.2 Amps inductive output current, 250VAC/30VDC input.	R10–R15	(6) separate commons for each relay	20~26 AWG	slot #3	GS4 – all
			RO10–RO15	(6) normally open relay output Resistive load: 5A(NO) / 250VAC 5A(NO) / 30VDC Inductive load (COSØ 0.4) 2A(NO) / 250VAC			

** GS4 AC drives have three option card slots; each slot will hold only one option card designed for that particular slot. I/O cards are designed for slot #3, and will not fit in any other slot.*

GS4-06CDD	GS4-06NA	GS4-06TR
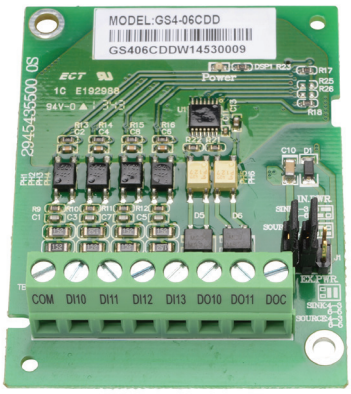	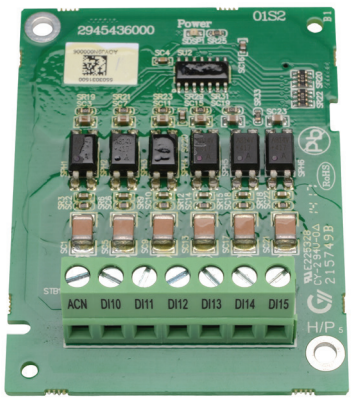	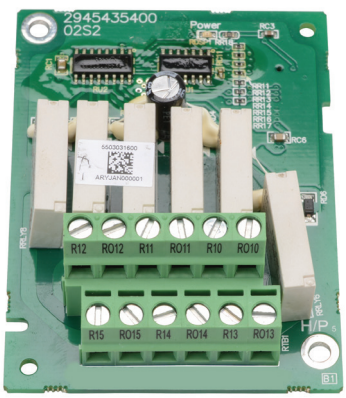

GS4-Specific Optional Accessories – Communication Interface Cards

Accessories Applicable Only to GS4 AC Drives

Please refer to the "GS/DURApulse AC Drives – Accessories " section for accessories applicable to multiple families of GS/DURApulse AC Drives, including GS4.

Communication Cards

Communication interface cards provide EtherNet/IP™ or ModbusTCP communication capability. Only one communication card can be installed at a time.

GS4 *DURA*PULSE Drives Communication Interface Cards					
Part Number	***Price***	***Description***	***Specifications***	***Placement****	***GS Drive***
GS4-CM-ENETIP*	$110.00	DURAPULSE communication card, EtherNet/IP	Interface: EtherNet/IP RJ45 with MDI/MDIX auto-detect Number of ports: 1 (16 connections max) Transmission method: IEEE 802.3, IEEE 802.3u Transmission cable: Category 5e shielding 100MHz Transmission speed: 10/100 Mbps Auto-Detect Network protocol: ICMP, IP, TCP, UDP, DHCP, Modbus TCP, EtherNet/IP Power supply voltage: 5VDC (supplied by the GS4 AC drive) Insulation voltage: 500VDC Power consumption: 0.8W Weight: 25g Noise immunity ESD (IEC 61800-5-1, IEC 61000-4-2) EFT (IEC 61800-5-1, IEC 61000-4-4) Surge Test (IEC 61800-5-1, IEC 61000-4-5) Conducted Susceptibility Test (IEC 61800-5-1, IEC 61000-4-6) Operation: -10°C to +50°C [14°F to 122°F] (temperature), 90% (humidity) Storage: -25°C to +70°C [-13°F to +158°F] (temperature), 95% (humidity) Vibration / Shock immunity: IEC 61800-5-1, IEC 60068-2-6/IEC 61800-5-1, IEC 60068-2-27 Ethernet timeout functionality for Ethernet/IP connections GS4-CM-ENETIP supports 4 EtherNet/IP connections and also supports 4 ModTCP connections. These ModTCP connections cannot start/stop or change command frequency in the drive, but can be used to monitor the drive and change Parameters. Ethernet timeout functionality *for ModTCP connections* is *not* supported on the EtherNet/IP card.	slot #1	GS4 – all
GS4-CM-MODTCP*	$97.00	DURAPULSE communication card, ModbusTCP	Interface: Ethernet RJ45 with MDI/MDX auto-detect Number of ports: 1 (4 connections max) Transmission method: IEEE 802.3, IEEE 802.3u Transmission cable: Category 5e shielding 100MHz Transmission speed: 10/100 Mbps Auto-Detect Network protocol: ICMP, IP, TCP, UDP, DHCP, Modbus TCP Power supply voltage: 5VDC (supplied by the GS4 AC drive) Insulation voltage: 500VDC Power consumption: 0.8W Weight: 25g Noise immunity ESD (IEC 61800-5-1, IEC 61000-4-2) EFT (IEC 61800-5-1, IEC 61000-4-4) Surge Test (IEC 61800-5-1, IEC 61000-4-5) Conducted Susceptibility Test (IEC 61800-5-1, IEC 61000-4-6) Operation: -10°C to +50°C [14°F to 122°F] (temperature), 90% (humidity) Storage: -25°C to +70°C [-13°F to +158°F] (temperature), 95% (humidity) Vibration / Shock immunity: IEC 61800-5-1, IEC 60068-2-6/IEC 61800-5-1, IEC 60068-2-27 Ethernet Timeout functionality for ModTCP connections	slot #1	GS4 – all

** GS4 AC drives have three option card slots; each slot will hold only one option card designed for that particular slot. Communication interface cards are designed for slot #1, and will not fit in any other slot.*

GS4-CM-ENETIP	***GS4-CM-MODTCP***

*Dura*Pulse Accessories – Software GSoft2 Drive Configuration Software

GSoft2 Drive Configuration Software

Available for *FREE* Download

***DURA*PULSE Drives GSOFT2 Drive Configuration Software**			
Part Number	***Price****	***Description***	***For GS Drive***
GSOFT2	$10.50	GSOFT2 Windows configuration software, USB or free download. For use with DURApulse GS4, GS10, GS20, GS20X and GS30 series AC drives. Requires PC serial port or USB-485M serial adapter.	GS4 – all GS10 – all GS20(X) – all GS30 – all
USB-485M	$60.00	PC adapter, USB A to RS-485 (RJ45/RJ12).	GS4/GS10
USB-CBL-AB3	$12.00	Programming cable, USB A to USB B, 3ft cable length.	GS4 – all (for Drive FW only) GS20(X) – all GS30 – all
**** GSOFT2 can be downloaded for free or purchased on USB from AutomationDirect.com (search for GSOFT2).***			

GSOFT2 Drive Configuration Software

GSoft2 is the configuration software for the Automation *Dura*Pulse family of drives. It is designed to allow you to connect a personal computer to the drive, and perform a variety of functions.

GSoft2 includes an integral help file with software instructions. GSoft2 can be downloaded for free or purchased on USB from AutomationDirect.com (search for GSoft2).

Functions

- Create new drive configurations
- Upload/download drive configurations
- Edit drive configurations
- Archive/store multiple drive configurations on your PC
- Trend drive operation parameters (not available with GS10)
- Tune the drive PID loop
- View real time key operating parameters
- Real-time trending
- Start/Stop drive and switch directions, provided drive is set up for remote operation
- View drive faults

Computer System Requirements

GSoft2 will run on Windows PCs that meet the following requirements:

- Windows OS: ***8***: 32 & 64 bit, ***8.1***: 32 & 64 bit, ***10***: 64 bit, 11
- Edge or Chrome (for HTML help support)
- 32 Mb of available memory
- 10 Mb hard drive space
- Available USB port
- USB to RS485 adapter needed for GS4 and GS10 models

GS4/GS20(X)/GS30 Accessories – Software
GSLogic PLC Programming Software

Optional Accessory Software Applicable Only to AC Drive Series:

- *GS4*
- *GS20(X)*
- *GS30*

GSLOGIC Drive Configuration Software

Available for *FREE* Download

GS4/GS20(X)/GS30 *DURA*PULSE Drives GSLogic PLC Programming Software

Part Number	*Price**	*Description*	*For GS Drive*
GSLOGIC	$10.50	GSLOGIC Windows logic software, USB or free download. For use with DURApulse GS4, GS20, GS20X and GS30 series AC drives. Requires PC serial port or USB-485M serial adapter.	GS4 - all GS20(X) – all GS30 – all
USB-485M	$60.00	PC adapter, USB A to RS-485 (RJ45/RJ12).	GS4 – all
USB-CBL-AB3	$12.00	Programming cable, USB A to USB B, 3ft cable length.	GS20(X) – all GS30 – all

** GSLOGIC can be downloaded for free or purchased on USB from AutomationDirect.com (search for GSLOGIC).*

PLC Summary

The GS4, GS20(X), and GS30 drives include a built-in PLC. Programmed in ladder logic, the PLC provides a comprehensive set of instructions and 2,000 (GS20(X)), 5,000 (GS30), or 10,000 (GS4) steps of programming capacity. GSLogic PLC software includes a Help File which contains the detailed information needed to use the PLC.

The PLC functionality is included with every GS4, GS20(X), and GS30 drive, and can be accessed over communications by external PLCs (via serial Modbus), or by the drive itself (using built-in PLC instructions). The PLC is perfectly suited for applications where digital and analog I/O requirements are small. For applications with complex PLC programming or large I/O requirements, please consider Click, Productivity, or Do-More/BRX. All of these PLCs can be easily integrated with the GS drive family or PLC. The GS4-KPD keypad is capable of storing multiple PLC programs.

There are two methods for communicating from the PLC to the drive. The first method is to use the WPR and RPR instructions available in the PLC's library. These two instructions can read from or write to any AC drive parameter in the same physical drive. The second method is to use Modbus RTU. The PLC is a Serial Modbus slave only. A Modbus RTU master can communicate with the PLC via serial only; optional communication cards cannot address the PLC. If communication cards (EtherNet/IP or Modbus TCP) are the desired method of communication, the drive includes PLC Buffers parameters that can be used. Simply write the needed information from the PLC into the drive's PLC buffer parameters using the WPR instruction. The Modbus TCP or EtherNet/IP cards can then read the VFD parameters.

GSLogic Introduction

GSLogic is the drive PLC programming software for the AutomationDirect GS4, GS20(X), and GS30 family of drives. It is designed to enable you to perform a variety of drive PLC programming functions. Windows editing functions like cut, copy, paste, multiple windows, etc., are supported. GSLogic also provides for register editing, settings, file reading, saving, online monitoring settings, and other convenience functions, such as:

- Upload/download drive PLC program files to the onboard PLC
- Create new drive PLC programs
- Edit drive PLC programs
- Archive/store multiple drive PLC programs on your PC or the GS4-KPD drive keypad
- Control drive PID loops (FPID instructions)
- View in real time all drive PLC registers
- Print drive PLC program files

GSLogic includes an integral help file that includes software instructions, how to use GSLogic, and how to use the GS drive PLC.

GSLogic System Requirements

GSLogic is a Windows-based programming software environment. Please check the following requirements when choosing your PC configuration:

- Windows OS: ***8***: 32 & 64 bit, ***8.1***: 32 & 64 bit, ***10***: 64 bit, ***11***
- 300MB free hard-disk space
- USB Port required for project transfer to drive
- USB-485M serial adapter required for GS4 models

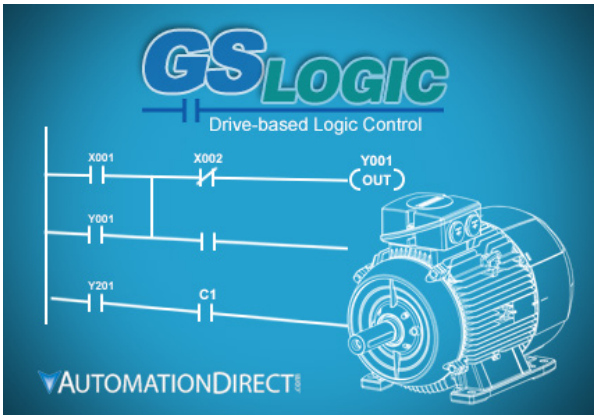

*Dura*Pulse Optional Accessories – Advanced LCD Keypad

Advanced Keypad

NOTE: The keypad described below is included with the GS4 AC Drive, and is also available for purchase separately as a spare/replacement component for GS4, or an optional upgrade for GS10/GS20(X)/GS30.

Keypad Panel-Mounting Kit

NOTE: The keypad panel-mounting kit described below is an optional accessory that is NOT included with the GS10/GS20(X)/GS30 AC drive.

GSx Series *DURA*PULSE Drives Keypad and Keypad Panel-Mounting Kit

Part Number	Price	Description	For GS Drive
GS4-KPD*	$107.00	Spare or replacement keypad for GS4 AC drives; optional advanced keypad for GS20(X) drives; includes RJ45 connector; great for maintenance or back-up programs.	GS4 – all GS10 – all GS20(X) – all GS30 – all
GS4-BZL**	$29.50	Keypad Panel-Mounting Kit for remote surface mounting or embedded mounting of the AC drive removable keypad; hardware included. Use a standard Cat5e RJ45 patch cable (not included) to connect a remote-mounted keypad to the drive. Max cable length for remote-mounted keypad = 5m.	GS4 – all GS10 – all GS20(X) – all GS30 – all

**** A keypad is included with each GS4 AC Drive; additional keypads are available for spare/replacement components.***
***** The keypad mounting kit is an optional accessory that is NOT included with the GS4 AC drive; for mounting the keypad remotely from the drive.***
Note: Keypad firmware can only be upgraded when connected to a GS4 drive.

GS4-KPD

RJ45 Connector

Dimensions (mm [in])

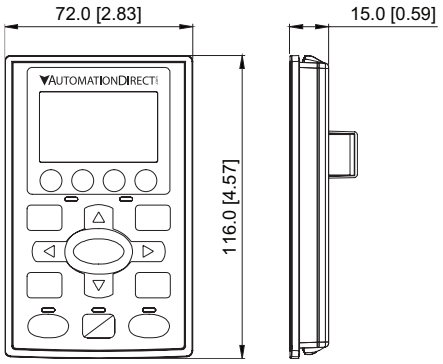

GS4-BZL

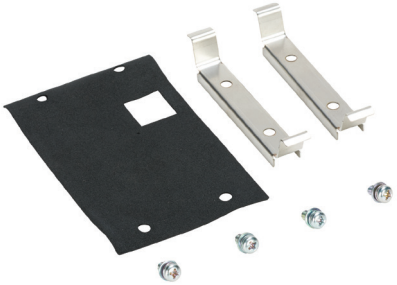

Wall Mounting

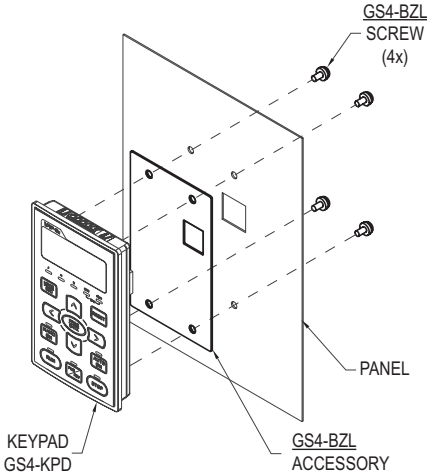

Embedded Mounting

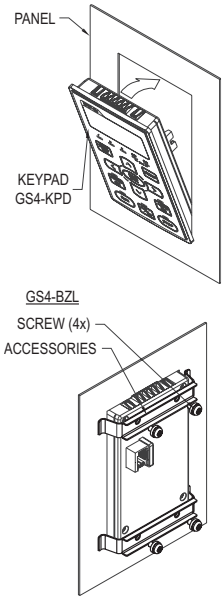

GS4-Specific Optional Accessories – Spare/Replacement Cooling Fans

Accessories Applicable Only to GS4 AC Drives

Please refer to the "GS/DURApulse AC Drives – Accessories " section for accessories applicable to multiple families of GS/DURApulse AC Drives, including GS4.

Cooling Fans for 230V GS4 Drives (Spare/Replacement)

NOTE: The fans described below are included with the applicable GS4 AC Drive, and are also available for purchase separately as spare/replacement components.

GS4 230V Models – (GS4-2xxx) – Fan Selection Table

Drive Model	Fan Model *			Description	Size	Voltage	Amps / Fan	Fans / Kit
	Part #	Price	Photo					
GS4-22P0 GS4-23P0 GS4-25P0	GS4-FAN-AM	$28.00		Frame A main	40mm	24	0.15	1
GS4-27P5	GS4-FAN-BM1	$34.50		Frame B main	80mm	24	0.33	1
	GS4-FAN-BB	$27.00		Frame B board level	40mm	24	0.18	1
GS4-2010 GS4-2015	GS4-FAN-BM2	$52.00		Frame B main	80mm	24	0.51	1
	GS4-FAN-BB	$27.00		Frame B board level	40mm	24	0.18	1
GS4-2020 GS4-2025 GS4-2030	GS4-FAN-CM	$49.00		Frame C main	92mm	24	0.75	1
	GS4-FAN-CB1	$28.00		Frame C board level	40mm	24	0.18	1
GS4-2040 GS4-2050	GS4-FAN-DM	$174.00		Frame D main	92mm	24	0.75	2
	GS4-FAN-DB	$58.00		Frame D board level	70mm	24	0.33	1
GS4-2060 GS4-2075	GS4-FAN-EM1	$239.00		Frame E main	120mm	24	1.08	2
	GS4-FAN-EB	$119.00		Frame E board level	120mm	24	0.76	1
GS4-2100	GS4-FAN-EM2	$303.00		Frame E main	92mm 120mm 120mm	24	0.75 1.08 1.08	3
	GS4-FAN-EB	$119.00		Frame E board level	120mm	24	0.76	1

** These fans are included with the GS4 drive, and also available separately as spare or replacement components. Electrical connectors are included.*

GS4-Specific Optional Accessories – Spare/Replacement Cooling Fans

Accessories Applicable Only to GS4 AC Drives

Please refer to the "GS/DURApulse AC Drives – Accessories " section for accessories applicable to multiple families of GS/DURApulse AC Drives, including GS4.

Cooling Fans for 460V GS4 Drives (Spare/Replacement)

NOTE: The fans described below are included with the applicable GS4 AC Drive, and are also available for purchase separately as spare/replacement components.

GS4 460V Models – (GS4-4xxx) – Fan Selection Table

Drive Model	Fan Model *			Description	Size	Voltage	Amps / Fan	Fans / Kit
	Part #	Price	Photo					
GS4-43P0 GS4-45P0 GS4-47P5	GS4-FAN-AM	$28.00		Frame A main	40mm	24	0.15	1
GS4-4010	GS4-FAN-BM1	$34.50		Frame B main	80mm	24	0.33	1
	GS4-FAN-BB	$27.00		Frame B board level	40mm	24	0.18	1
GS4-4015 GS4-4020	GS4-FAN-BM2	$52.00		Frame B main	80mm	24	0.51	1
	GS4-FAN-BB	$27.00		Frame B board level	40mm	24	0.18	1
GS4-4025 GS4-4030 GS4-4040	GS4-FAN-CM	$49.00		Frame C main	92mm	24	0.75	1
	GS4-FAN-CB2	$34.50		Frame C board level	40mm	12	0.60	1
GS4-4050 GS4-4060	GS4-FAN-D0M	$98.00		Frame D0 main	80mm	24	0.75	2
	GS4-FAN-DB	$58.00		Frame D board level	70mm	24	0.33	1
GS4-4075 GS4-4100	GS4-FAN-DM	$174.00		Frame D main	92mm	24	0.75	2
	GS4-FAN-DB	$58.00		Frame D board level	70mm	24	0.33	1
GS4-4125 GS4-4150	GS4-FAN-EM2	$303.00		Frame E main	92mm 120mm 120mm	24	0.75 1.08 1.08	3
	GS4-FAN-EB	$119.00		Frame E board level	120mm	24	0.76	1
GS4-4175 GS4-4200	GS4-FAN-FM	$431.00		Frame F main	92mm	24	0.76	4
	GS4-FAN-FB	$126.00		Frame F board level	120mm	24	1.08	1
GS4-4250 GS4-4300	GS4-FAN-GM	$902.00		Frame G main	250mm	48	2.2	2

** These fans are included with the GS4 drive, and also available separately as spare or replacement components. Electrical connectors are included.*

GS4-Specific Optional Accessories – Conduit Boxes

Accessories Applicable Only to GS4 AC Drives

Please refer to the "GS/DURApulse AC Drives – Accessories " section for accessories applicable to multiple families of GS/DURApulse AC Drives, including GS4.

Conduit Boxes

Optional Conduit Box Kits can be ordered separately. These kits bolt onto the bottom of the applicable GS4 drive to provide a convenient connection point for conduit entry, allowing the GS4 to maintain a IP20/NEMA 1 environmental protection rating; especially useful for GS4 drives mounted outside of an electrical control panel.

Note: GS4 Frames A through C have integral conduit box space built into the drive. No separate conduit boxes are necessary or available.

GS4 Frame Sizes D0–G – Conduit Box Selection Table

Drive		Conduit Box **			Description
Model	Frame*	Part #	Price	Photo	
GS4-4060, GS4-4050	D0	GS4-CBX-D0	$163.00		NEMA 1 conduit box kit for use with GS4 frame size DO AC drive; mounting hardware included
GS4-2040, GS4-2050; GS4-4075, GS4-4100	D	GS4-CBX-D	$163.00		NEMA 1 conduit box kit for use with GS4 frame size D AC drive; mounting hardware included
GS4-2060, GS4-2075, GS4-2100; GS4-4125, GS4-4150	E	GS4-CBX-E	$188.00		NEMA 1 conduit box kit for use with GS4 frame size E AC drive; mounting hardware included
GS4-4150, GS4-4200	F	GS4-CBX-F	$271.00		NEMA 1 conduit box kit for use with GS4 frame size F AC drive; mounting hardware included
GS4-4250, GS4-4300	G	GS4-CBX-G	$513.00		NEMA 1 conduit box kit for use with GS4 frame size G AC drive; mounting hardware included

** GS4 Frame Sizes A through C have integral conduit box space built into the drive; separate conduit boxes are not necessary nor available.*
*** Conduit Box Kits include mounting hardware; box base, box cover, bushings, and screws.*
Conduit box dimensions are shown with the AC drive dimensions, as mounted on the drive.

GS4-Specific Optional Accessories – Flange Mounting Kits

Flange Mounting Kits

Optional GS4 drive flange mounting kits allow the heat sinks on the back of select GS4 drives to be positioned through the back of the control enclosure. Since a majority of the heat generated by the GS4 drive will be outside the enclosure, heat load will be reduced and a smaller enclosure may possibly be used. These flange mounting kits are applicable to GS4 drive frame sizes A through C.

***NOTE:** GS4 Frames D0, D, E, and F have integral flange mounting hardware; additional Flange Mounting Kit not required (see cutout dimensions below). Frame size G cannot be flange-mounted.*

GS4 Frame Sizes A–C – Flange Mounting Kit Selection Table

Drive		Flange Mounting Kit **			Description
Model	Frame*	Part #	Price	Photo	
GS4-22P0 GS4-23P0 GS4-43P0	A	GS4-FMKIT-1	$74.00	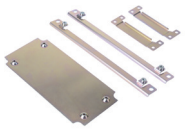	GS4 series Flange Mounting Kit, NEMA 1; for use with multiple GS4 Frame A drives; adapter plate and mounting hardware included
GS4-21P0 GS4-25P0 GS4-41P0 GS4-42P0 GS4-45P0 GS4-47P5	A	GS4-FMKIT-A	$62.00	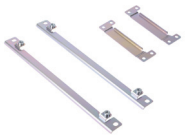	GS4 series Flange Mounting Kit, NEMA 1; for use with multiple GS4 Frame A drives; mounting hardware included
GS4-27P5 GS4-2010 GS4-2015 GS4-4010 GS4-4015 GS4-4020	B	GS4-FMKIT-B	$70.00	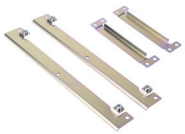	GS4 series Flange Mounting Kit, NEMA 1; for use with GS4 Frame B drives; mounting hardware included
GS4-2020 GS4-2025 GS4-2030 GS4-4025 GS4-4030 GS4-4040	C	GS4-FMKIT-C	$79.00	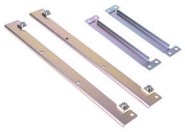	GS4 series Flange Mounting Kit, NEMA 1; for use with GS4 Frame C drives; mounting hardware included

** See panel cutout dimensions below for GS4 Frames A, B, C.*
** GS4 Frames D0, D, E, and F have integral flange mounting hardware; additional Flange Mounting Kit not required. See Appendix A of the GS4 User Manual for panel cut-out dimensions for frames D0, E, F.*
** Frame size G cannot be flange-mounted.*

GS4 Flange Mounting Kit Cutout Dimensions (mm [in])

Frame A	Frame B	Frame C
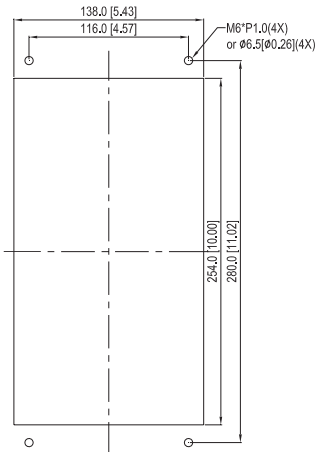	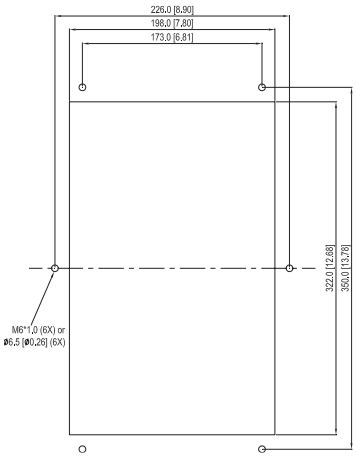	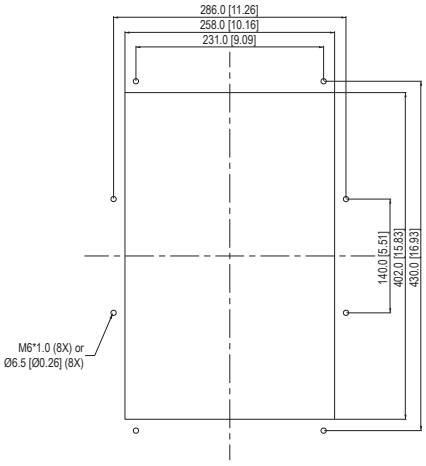

*DURA*PULSE GS4 AC Drives Specifications – Installation

Understanding the installation requirements for your *DURA*PULSE AC drive will help to ensure that it operates within its environmental and electrical limits.

Note: Never use only this catalog for installation instructions or operation of equipment; refer to the User Manual, GS4_UMW.

Environmental Conditions for GS4 AC Drives

Condition	Operation	Storage	Transportation
Installation Location	IEC60364-1/IEC60664-1 Pollution degree 2, Indoor use only	n/a	n/a
Ambient Temperature	see separate Operating Temperature table below	-25°C to +70°C	
Relative Humidity	Max 90%, non-condensing, non-frozen	Max 95%, non-condensing, non-frozen	
Air Pressure	86 to 106 kPa		70 to 106 kPa
Pollution Level	IEC721-3-3, no concentrate		
	Class 3C2; Class 3S2	Class 2C2; Class 2S2	Class 1C2; Class 1S2
Altitude	0–1000m (see separate derating section for altitudes of 1000–3000m)	n/a	n/a
Package Drop	n/a	ISTA procedure 1A(according to weight) IEC60068-2-31	
Vibration	1.0mm, peak to peak value range from 2Hz to 13.2Hz; 0.7G–1.0G range from 13.2Hz to 55Hz; 1.0G range from 55Hz to 512Hz. Comply with IEC 60068-2-6		
Impact	IEC/EN 60068-2-27		
Installation Orientation	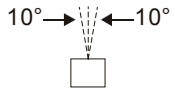 Max allowed offset angle ±10° (from vertical installation position)		

Operating Temperature and Protection Level

Frame Size		***Top cover***	***Conduit Box***	***Protection Level***	***Operating Temperature***
A–C	***230V: 1.0–30 hp*** ***460V: 1.0–40 hp***	With top cover removed	Standard conduit plate	IP20 / UL Open Type	-10–50°C [14–122°F]
		With top cover in place		IP20 / UL Type1 / NEMA 1	-10–40°C [14–104°F]
D0–G	***230V: >30hp*** ***460V: >40hp***	N/A	With conduit box	IP20 / UL Type1 / NEMA 1	-10–40°C [14–104°F]
	230V: >30hp ***460V: >40hp***	N/A	Without conduit box	IP00 / IP20 / UL Open Type * **Only the circled area is IP00.** **Other parts are IP20.** 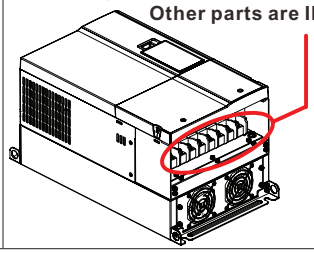	-10–50°C [14–122°F]

**** Only the exposed terminal blocks are IP00; the other components are IP20***

WARNING: AC DRIVES GENERATE A LARGE AMOUNT OF HEAT WHICH MAY DAMAGE THE AC DRIVE. AUXILIARY COOLING METHODS MAY BE REQUIRED TO AVOID EXCEEDING MAXIMUM OPERATING TEMPERATURE. WHEN POSSIBLE, CONSIDER FLANGE MOUNTING TO LOWER ENCLOSURE TEMPERATURES.

WARNING: MAXIMUM AMBIENT TEMPERATURES MUST NOT EXCEED 50°C (122°F), OR 40°C (104°F), FOR ALL GS4 MODELS.

DURAPULSE GS4 AC Drives Specifications – Air Flow and Power (Heat) Dissipation

GS4 AC Drives Air Flow and Power (Heat) Dissipation

Model Number	Airflow Rate[1] for Cooling						Power (Heat) Dissipation[2]		
	Flow Rate[1] (cfm)			Flow Rate[1] (m^3/hr)			Power Dissipation[2] (Watt)		
	External	Internal	Total	External	Internal	Total	External (Heat sink)	Internal	Total
GS4-21P0	–	–	–	–	–	–	33	27	60
GS4-22P0	14	–	14	24	–	24	56	31	87
GS4-23P0	14	–	14	24	–	24	79	36	115
GS4-25P0	10	–	10	17	–	17	113	46	159
GS4-27P5	40	14	54	68	24	92	197	67	264
GS4-2010	66	14	80	112	24	136	249	86	335
GS4-2015	58	14	73	99	24	123	409	121	530
GS4-2020	166	12	178	282	20	302	455	161	616
GS4-2025	166	12	178	282	20	302	549	184	733
GS4-2030	166	12	178	282	20	302	649	216	865
GS4-2040	179	30	209	304	51	355	913	186	1099
GS4-2050	179	30	209	304	51	355	1091	220	1311
GS4-2060	228	73	301	387	124	511	1251	267	1518
GS4-2075	228	73	301	387	124	511	1401	308	1709
GS4-2100	246	73	319	418	124	542	1770	369	2139
GS4-41P0	–	–	–	–	–	–	33	25	58
GS4-42P0	–	–	–	–	–	–	45	29	74
GS4-43P0	14	–	14	24	–	24	71	33	104
GS4-45P0	10	–	10	17	–	17	103	38	141
GS4-47P5	10	–	10	17	–	17	134	46	180
GS4-4010	40	14	54	68	24	92	216	76	292
GS4-4015	66	14	80	112	24	136	287	93	380
GS4-4020	58	14	73	99	24	123	396	122	518
GS4-4025	99	21	120	168	36	204	369	138	507
GS4-4030	99	21	120	168	36	204	476	158	634
GS4-4040	126	21	147	214	36	250	655	211	866
GS4-4050	179	30	209	304	51	355	809	184	993
GS4-4060	179	30	209	304	51	355	929	218	1147
GS4-4075	179	30	209	304	51	355	1156	257	1413
GS4-4100	186	30	216	316	51	367	1408	334	1742
GS4-4125	257	73	330	437	124	561	1693	399	2092
GS4-4150	223	73	296	379	124	503	2107	491	2598
GS4-4175	224	112	336	381	190	571	2502	579	3081
GS4-4200	289	112	401	491	190	681	3096	687	3783
GS4-4250	–		454	–		771	–		4589
GS4-4300			454			771			5772

The required airflow shown in chart is for installing a single GS4 drive in a confined space.
When installing multiple GS4 drives, the required air volume would be the cumulative air volume for all drives in the enclosure.

Heat dissipation shown in the chart is for installing a single GS4 drive in a confined space.
When installing multiple drives, the volume of heat dissipation should be the cumulative heat dissipation of all drives in the enclosure.
Heat dissipation for each model is calculated by rated voltage, current and default carrier frequency.

1) External flow rate is across the heat sink. Internal flow rate is through the chassis.
Published flow rates are the result of active cooling using fans; factory-installed in the drive.
Unpublished flow rates (-) are the result of passive cooling in drives without factory-installed fans.
2) When calculating power dissipation (Watt Loss) use the total value if the drive is foot mounted, or the internal value if the drive is flange mounted. Where only a total value is published, these models cannot be flange mounted.

Dimensions for Minimum Clearance * (mm / in)

Frame Size	Above & Below	Side to Non-Heat Source	Side to Heat Source	Front
A–C	60 / 2.4	30 / 1.2	10 / 0.4	0 / 0
D(0)–F	100 / 4.0	50 / 2.0	n/a	0 / 0
G	200 / 7.9	100 / 4.0	2 x B	0 / 0

* The minimum mounting clearances stated in this table applies to GS4 drives frames A to G. Failure to follow the minimum mounting clearances may cause the fan to malfunction and cause a heat dissipation problem.

DURAPULSE GS4 AC Drives Specifications – Terminals

Main Circuit Terminals	
Terminal	**Description**
R/L1	Input Power – phase 1
S/L2	Input Power – phase 2
T/L3	Input Power – phase 3
U/T1, V/T2, W/T3	AC Drive Output
+1, +2	DC Choke Connection (frames A–C)
B1, B2	Braking Resistor Connection (frames A–C)
+1/DC+, -/DC-	External Dynamic Brake Unit (frames D–G)
⏚	Ground

Control Circuit Terminals

Terminal	Description	Remarks
+10V	Potentiometer Power Supply	Analog frequency setting: +10VDC 20mA max output
-10V		Analog frequency setting: -10VDC 20mA max output
+24V	Digital Control Signal Source	+24V±5%, 200mA max output; use with DCM
AI1	Analog Input 1	Range: 0–10V or 0/4–20mA = 0–Max Output Frequency AI1 switch = SW3; factory setting is 0–10V Impedance: 20kΩ (SW3 = 0–10V); 250Ω (SW3 = 0/4–20mA)
AI2	Analog Input 2	Range: 0/4–20mA or 0–10V = 0–Max Output Frequency AI2 Switch = SW4; factory setting is 0–20mA Impedance: 250Ω (SW4 = 0/4–20mA); 20kΩ (SW4 = 0–10V);
AI3	Analog Input 3	Impedance: 20kΩ Range: -10VDC to +10 VDC = 0–Max Output Frequency *Note: For -10V to +10V operation, connect the pot to +10V and -10V. Keep the pot wiper connected to AI3.*
ACM	Analog Common	Common for analog terminals
AO1	Analog Output 1	-10 to +10V max output current 2mA; max load 5kΩ Resolution: 0–10V corresponds to max operation frequency Range: 0–10V or -10 to +10V AO1 Switch = SW1, factory setting is 0–10V
AO2	Analog Output 2 (internal circuit same as AO1)	0–10V max output current 2mA; max load 5kΩ 0–20mA max output current 20mA; max load 500Ω Resolution: 0–10V corresponds to max operation frequency Range: 0–10V or 0/4–20mA AO2 Switch = SW2; factory setting is 0–10V
DIC	Digital Input Common Rail	Common terminal for multi-function inputs; Can be tied to DCM (for sinking) or to +24V (for sourcing)
DI1–DI8	Digital Inputs 1 thru 8	ON: the activation current is 3.3mA ≥ 11VDC OFF: leakage current tolerance is 1.4mA ≤ 5VDC
DCM	Digital Signal Common	Refer to terminals FO, FWD, REV
DO1	Digital Output 1	The AC motor drive releases various monitor signals such as drive in operation, frequency attained, and overload indication via transistor (open collector). Range: 5–48 VDC. Use with DOC.
DO2	Digital Output 2 (internal circuit same as DO1)	Multi-function Output 2 (photocoupler). Range: 5–48 VDC. Use with DOC.
DOC	Digital Output Common	Max 5–48 VDC, 50mA (user supplied)
+24V	STO Control Signal Source	Safe Torque Off function. Refer to Appendix E: Safe Torque Off for more details.
ECM	EStop Common	
SCM1	STO Input 1 Common	
SCM2	STO Input 2 Common	
STO1	STO Input 1	
STO2	STO Input 2	
FO	Digital Frequency Output	High-speed pulse output. Use with DCM. Digital Frequency Out = Drive Output Frequency [Hz] x P3.38 [Frequency Output Multiplier]. Duty-cycle: 50% ±1% Min load impedance: 1kΩ/100pf Max current: 30mA Max voltage: 30VDC
FWD	Forward Command	Use with DCM. ON = forward running OFF = deceleration to stop
R1	R1 Relay Common	Resistive Load: 3A(N.O.) / 3A(N.C.); 250VAC 5A(N.O.) / 3A(N.C.); 30VDC Inductive Load (COS 0.4): 1.2A(N.O.) / 1.2A(N.C.); 250VAC These terminals are to output monitoring signals, such as drive in operation, frequency attained, or overload indication. Note: R1 and R2 have N.O. and N.C. contacts.
R1C	R1 Relay N.C.	
R1O	R1 Relay N.O.	
R2	R2 Relay Common	
R2C	R2 Relay N.C.	
R2O	R2 Relay N.O.	
REV	Reverse Command	Use with DCM. ON = reverse running OFF = deceleration to stop
RJ45-1	RJ45 Port 1 (RS-485)	Pins 1,2,7,8: Reserved Pins 3,6: SGND Pin 4: SG- Pin 5: SG+ (RJ45-1 and RJ45-2 are connected internally to ports SG+ and SG- below)
RJ45-2	RJ45 Port 2 (RS-485)	
SG+, SG-, SGND	Modbus RS-485 (SG+ and SG- are connected internally to the two RJ45 ports above)	
⏚	Digital Control Ground	

DURAPULSE GS4 AC Drives – Basic Wiring Diagram

Power Wiring Diagram: GS4 230V Models – Single-Phase

Note: Users MUST connect wiring according to the circuit diagram shown below. (Refer to user manual GS4-UMW for additional specific wiring information.)
Note: We specify DC chokes, but we do not stock them.

GS4-2xxx models,
230VAC Single Phase
Includes frame sizes A, B, C, D, & E

Provide single-phase input power
Connect to L1 and L2 or L3

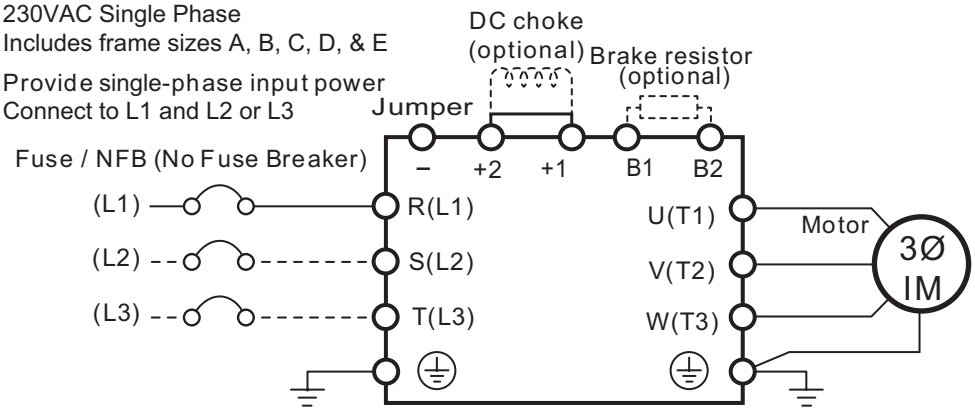

Connect 230VAC, Single-Phase power to any two of the R, S, or T terminals

Power Wiring Diagram: GS4 Frame Size A, B, C Models – Three-Phase

Note: Users MUST connect wiring according to the circuit diagram shown below. (Refer to user manual GS4-UMW for additional specific wiring information.)
Note: We specify DC chokes, but we do not stock them.

GS4-21P0 – GS4-2030
GS4-41P0 – GS4-4040 models
230/460VAC, 3-Phase
Includes frame sizes A, B, C

Provide 3-phase input power

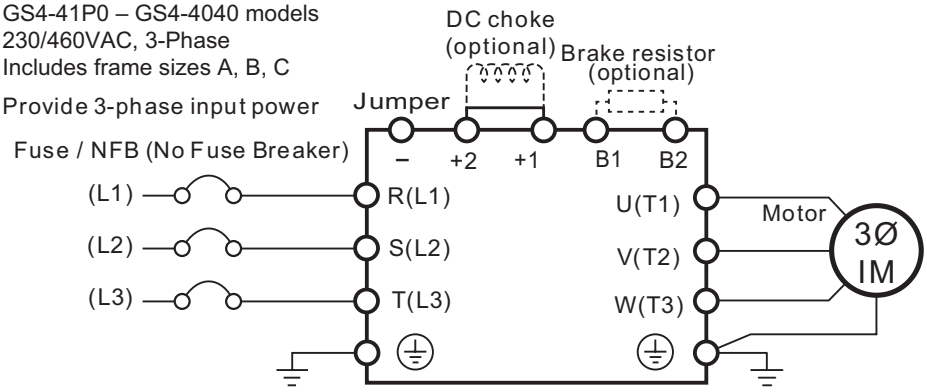

Power Wiring Diagram: GS4 Frame Size D0, D, E, F Models – Three-Phase

Note: Users MUST connect wiring according to the circuit diagram shown below. (Refer to user manual GS4-UMW for additional specific wiring information.)

GS4-2040 – GS4-2100
GS4-4050 – GS4-200 models
230/460VAC, 3-Phase
Includes frame sizes D0, D, E, F

+1/DC+ & -/DC- terminals are for the connection of an optional GS-xDBU dynamic braking unit.
Do NOT connect a braking resistor directly to terminals +1/DC+ and -/DC-. Connecting a resistor directly to these terminals will damage the GS4 drive!

Provide 3-phase input power

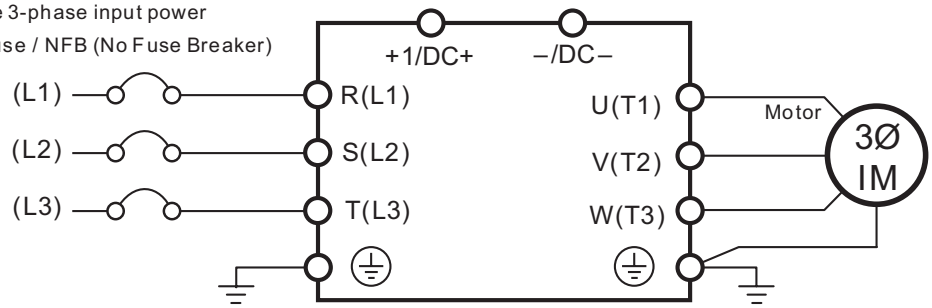

*DURA*PULSE GS4 AC Drives – Basic Wiring Diagram

Power Wiring Diagram: GS4 Frame Size G Models – Three-Phase

Note: Users MUST connect wiring according to the circuit diagram shown below. (Refer to user manual GS4-UMW for additional specific wiring information.)

GS4-4250 &
GS4-4300 models
460VAC, 3-Phase

Provide 3-phase input power

+1/DC+ & -/DC- terminals are for the connection of an optional GS-xDBU dynamic braking unit.
Do NOT connect a braking resistor directly to terminals +1/DC+ and -/DC-. Connecting a resistor directly to these terminals will damage the GS4 drive!

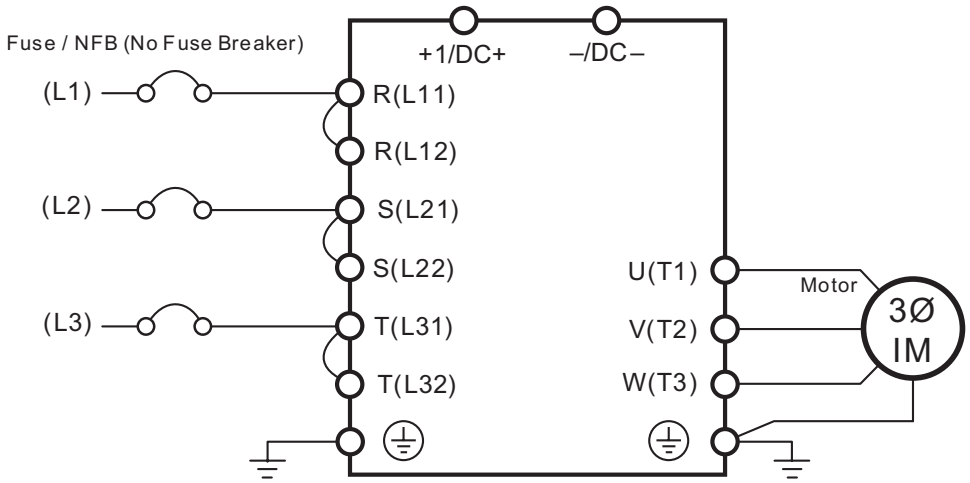

DURAPULSE GS4 AC Drives – Basic Wiring Diagram

Control Wiring Diagram: Full I/O with Sinking Inputs (field devices are sourcing)

Note: Users must connect wiring according to the circuit diagram shown below.

WARNING: DO NOT PLUG A MODEM OR TELEPHONE INTO THE DURAPULSE RJ45 SERIAL COMM PORT, OR PERMANENT DAMAGE MAY RESULT.

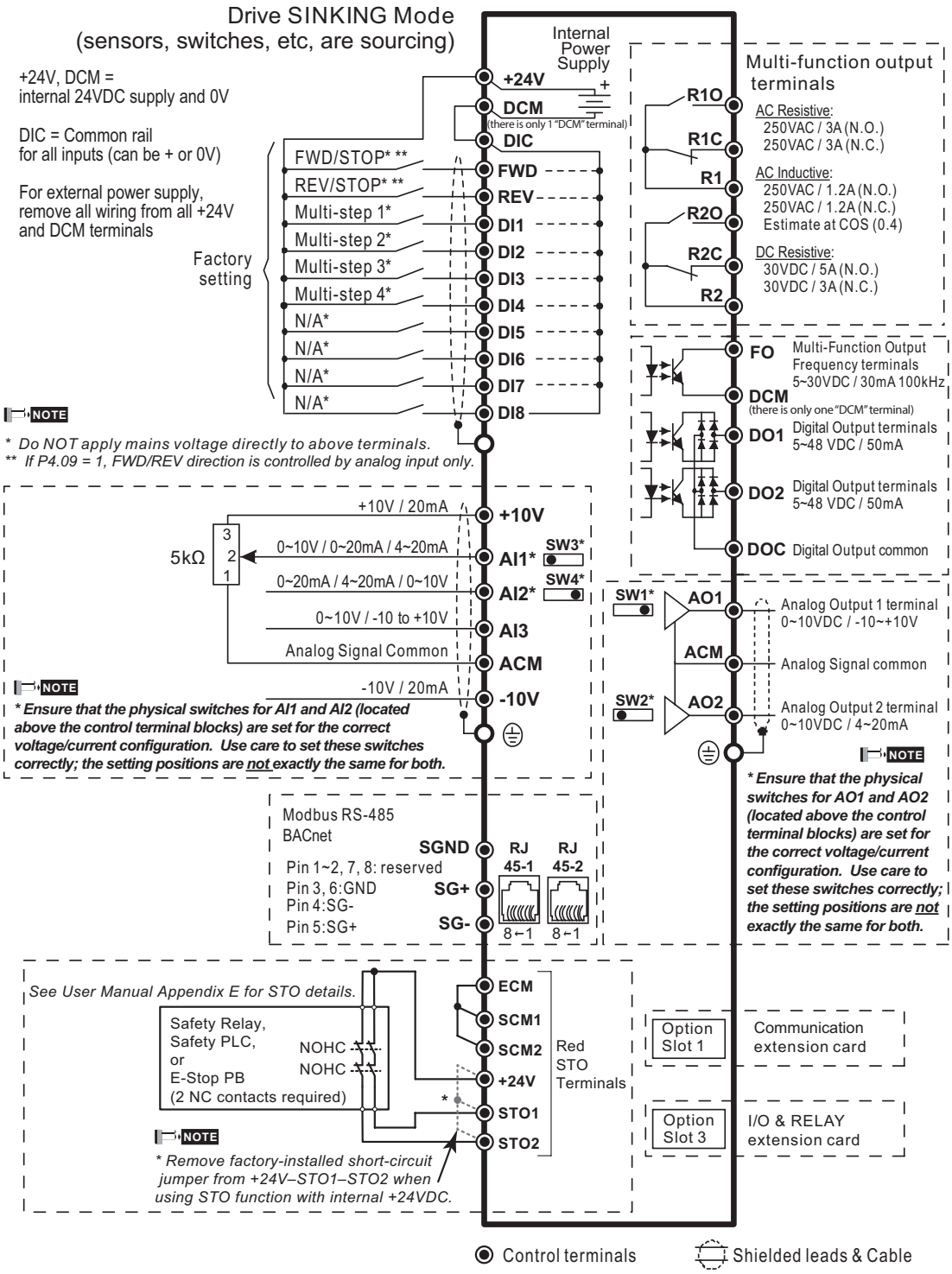

DURAPULSE GS4 AC Drives – Basic Wiring Diagram

Control Wiring Diagram: Full I/O with Sourcing Inputs (field devices are sinking)

Note: Users must connect wiring according to the circuit diagram shown below.

WARNING: DO NOT PLUG A MODEM OR TELEPHONE INTO THE DURAPULSE RJ45 SERIAL COMM PORT, OR PERMANENT DAMAGE MAY RESULT.

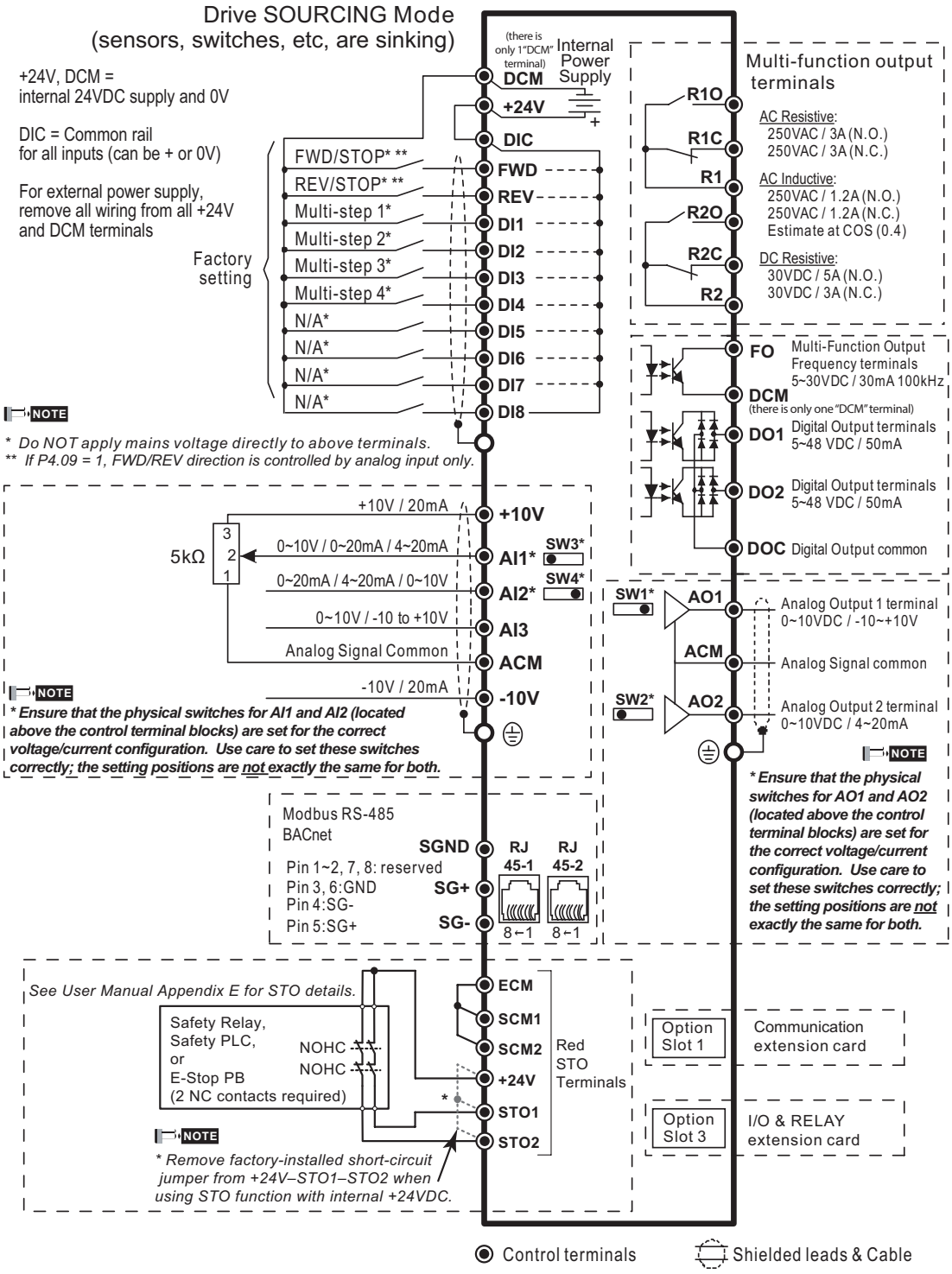

*DURA*PULSE GS4 AC Drives – Dimensions

GS4 *DURA*PULSE Frame Sizes by Drive Model

GS4 *DURA*PULSE Frame Sizes by Drive Model												
A		*B*		*C*		*D0*	*D*		*E*		*F*	*G*
230V	*460V*	*230V*	*460V*	*230V*	*460V*	*460V*	*230V*	*460V*	*230V*	*460V*	*460V*	*460V*
GS4-21P0	GS4-41P0	GS4-27P5	GS4-4010	GS4-2020	GS4-4025	GS4-4050	GS4-2040	GS4-4075	GS4-2060	GS4-4125	GS4-4175	GS4-4250
GS4-22P0	GS4-42P0	GS4-2010	GS4-4015	GS4-2025	GS4-4030	GS4-4060	GS4-2050	GS4-4100	GS4-2075	GS4-4150	GS4-4200	GS4-4300
GS4-23P0	GS4-43P0	GS4-2015	GS4-4020	GS4-2030	GS4-4040	–	–	–	GS4-2100	–	–	–
GS4-25P0	GS4-45P0	–	–	–	–	–	–	–	–	–	–	–
–	GS4-47P5	–	–	–	–	–	–	–	–	–	–	–

Dimensions – GS4 AC Drives

Units = (mm [in])

See our website: www.AutomationDirect.com for complete engineering drawings.

Dimensions – Frame Size A

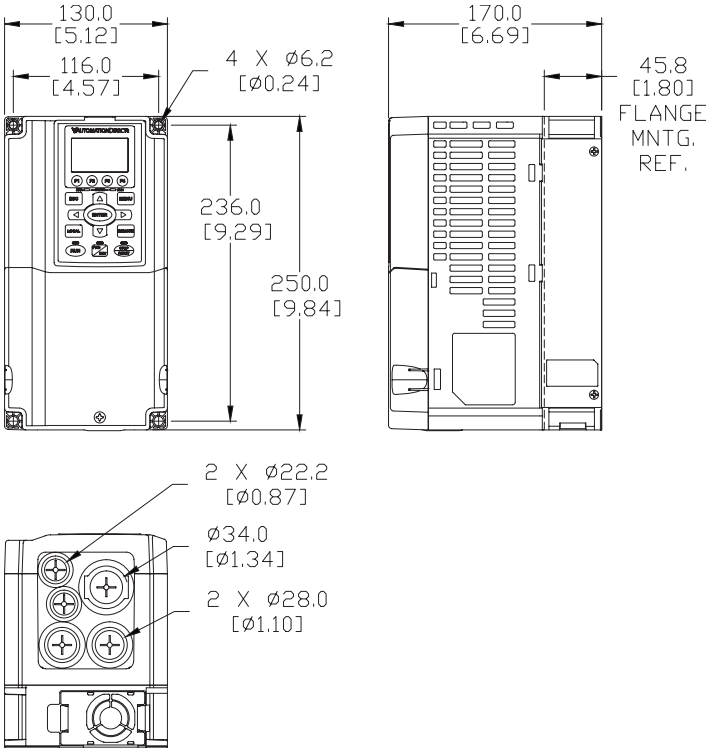

DURAPULSE GS4 AC Drives – Dimensions

Dimensions – GS4 AC Drives (Units = mm [in])

See our website: www.AutomationDirect.com for complete engineering drawings.

Dimensions – Frame Size B

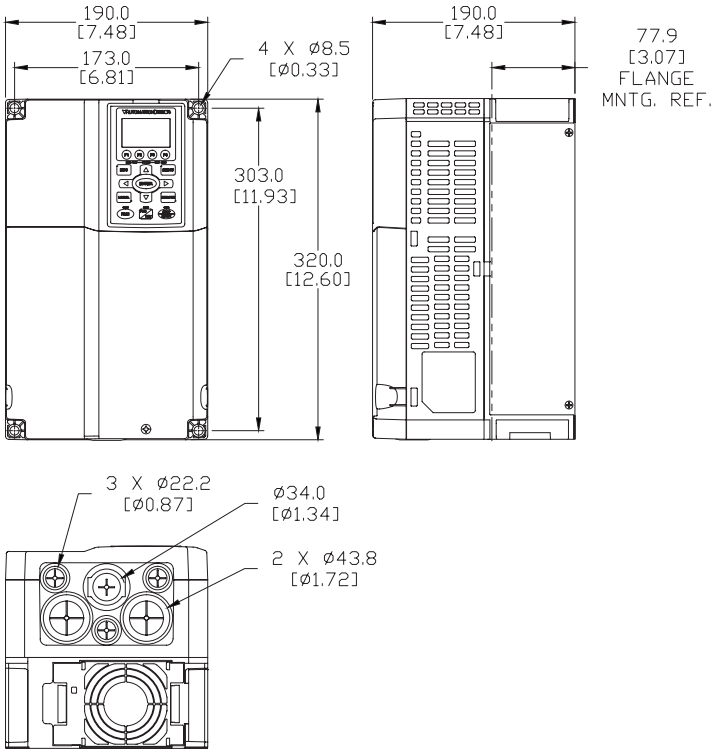

Dimensions – Frame Size C

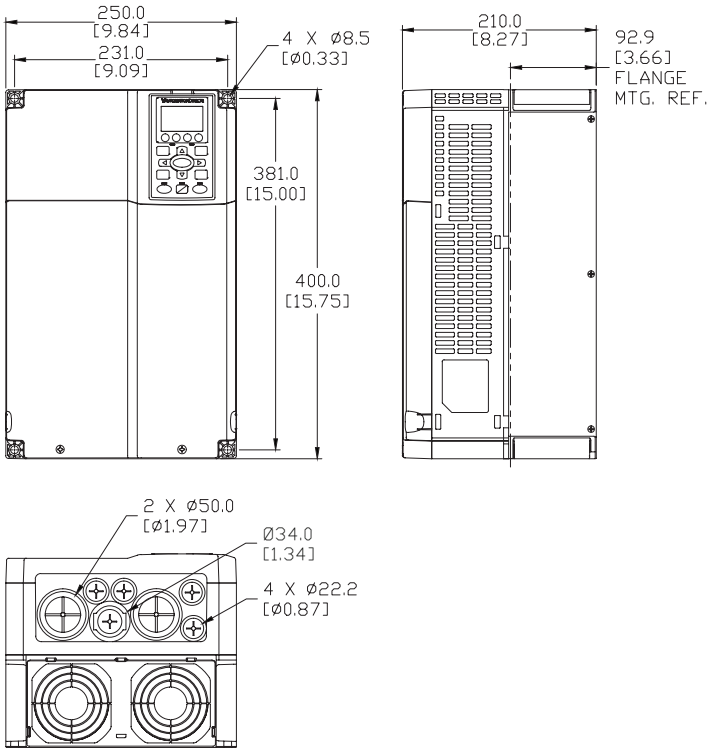

DURAPULSE GS4 AC Drives – Dimensions

Dimensions – GS4 AC Drives (Units = mm [in])

See our website: www.AutomationDirect.com for complete engineering drawings.

Dimensions – Frame Size D0

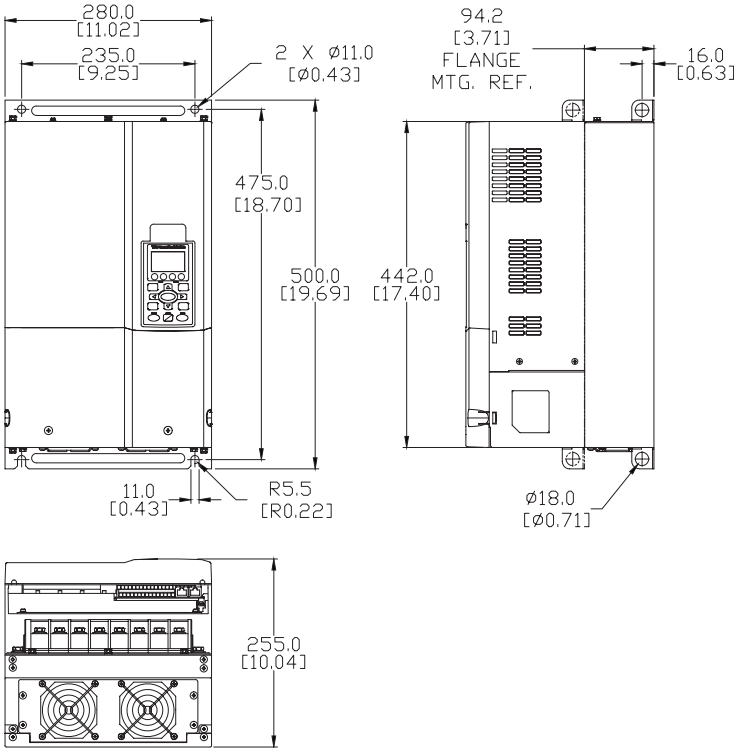

Dimensions – Frame Size D0 with Conduit Box

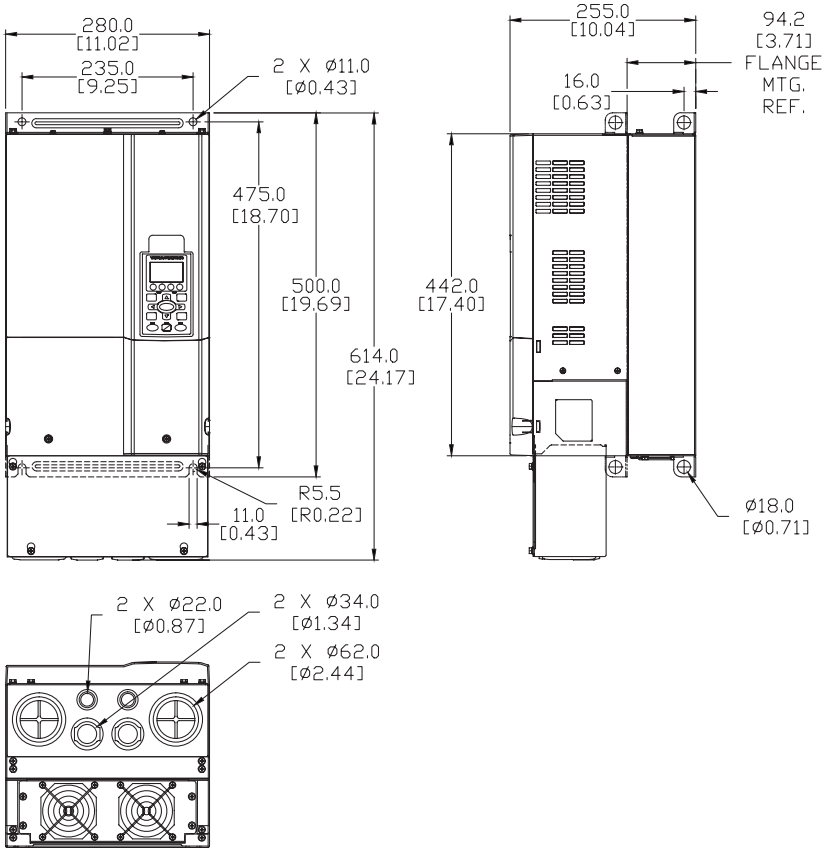

DURAPULSE GS4 AC Drives – Dimensions

Dimensions – GS4 AC Drives (Units = mm [in])

See our website: www.AutomationDirect.com for complete engineering drawings.

Dimensions – Frame Size D

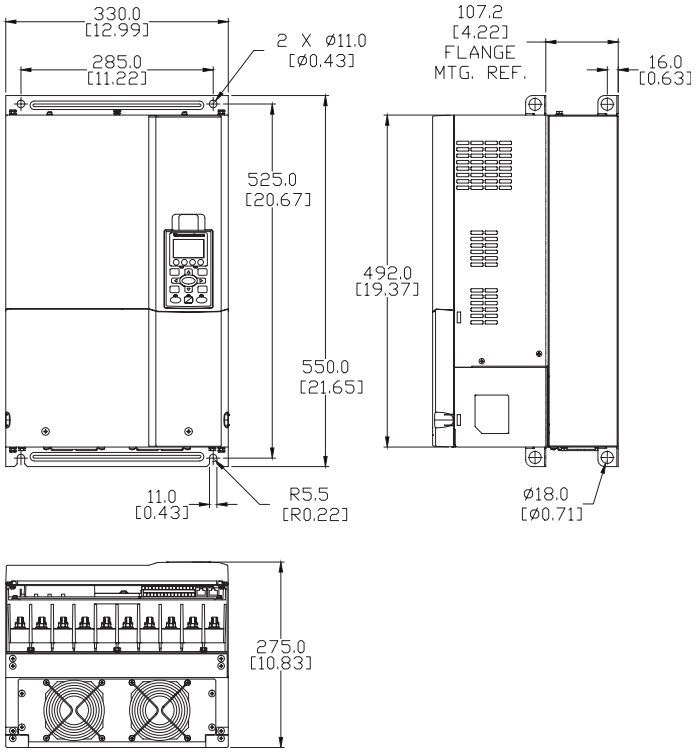

Dimensions – Frame Size D with Conduit Box

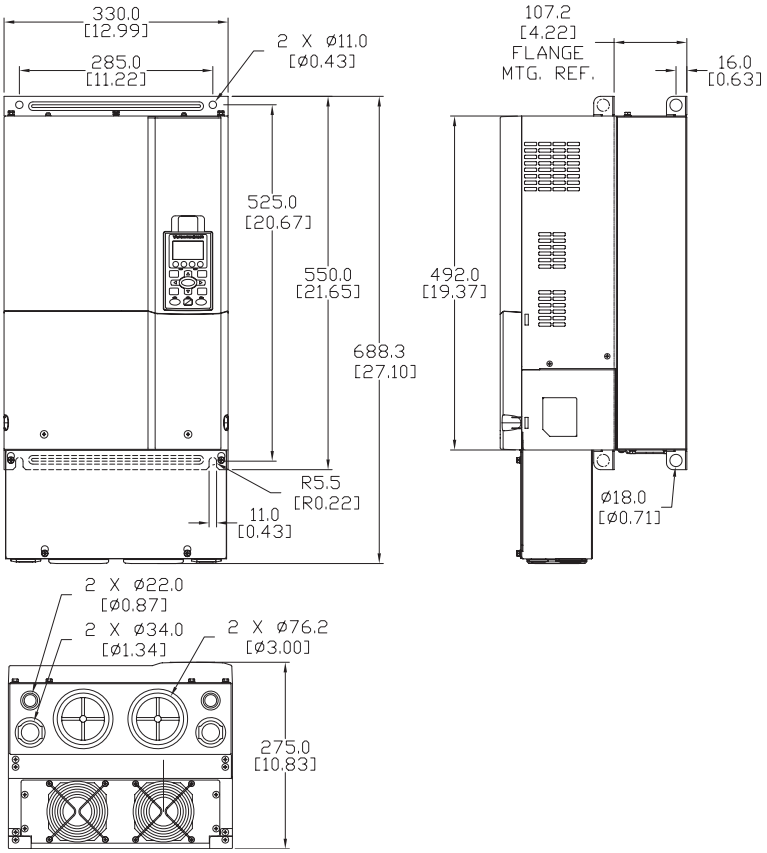

DURAPULSE GS4 AC Drives – Dimensions

Dimensions – GS4 AC Drives (Units = mm [in])

See our website: www.AutomationDirect.com for complete engineering drawings.

Dimensions – Frame Size E

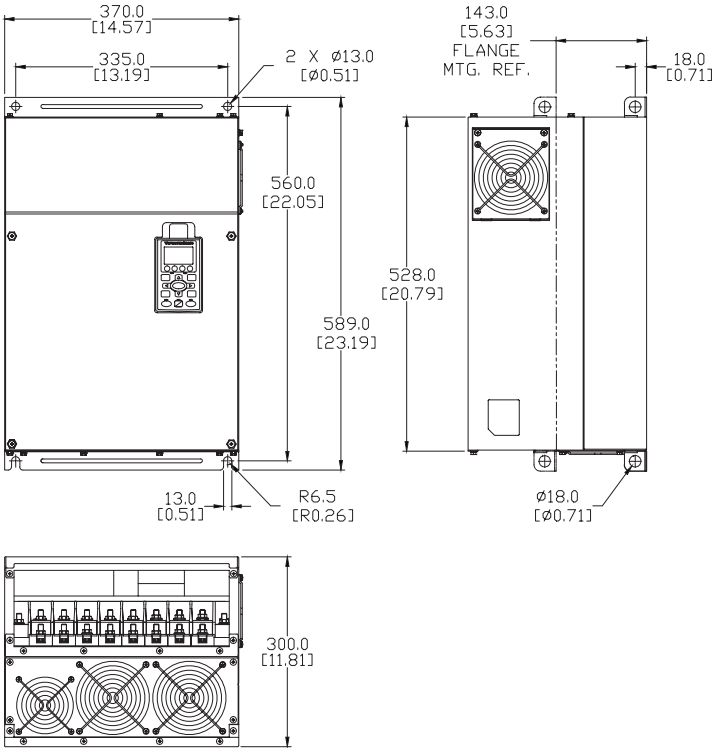

Dimensions – Frame Size E with Conduit Box

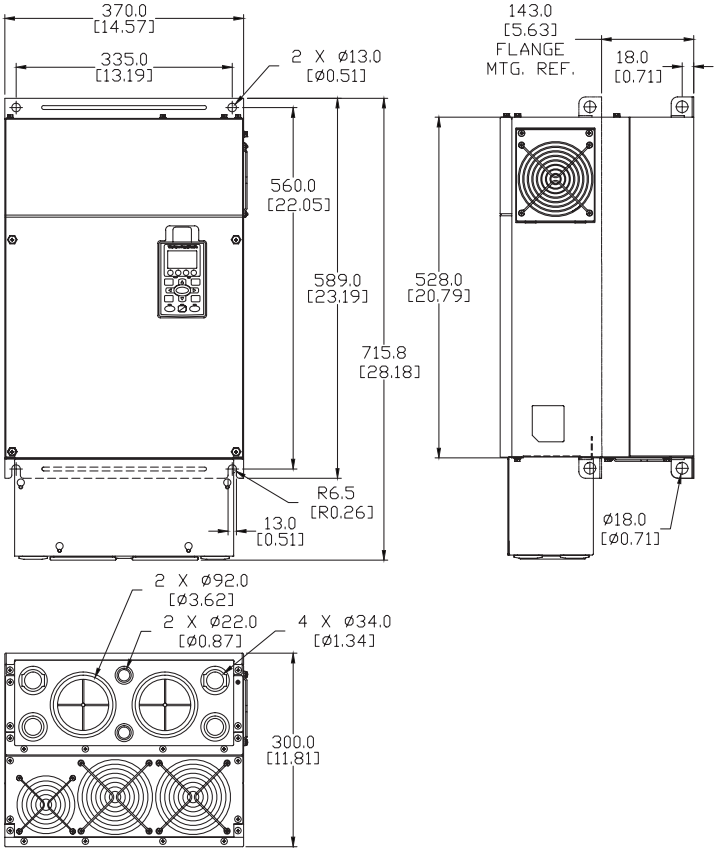

DURAPULSE GS4 AC Drives – Dimensions

Dimensions – GS4 AC Drives (Units = mm [in])

See our website: www.AutomationDirect.com for complete engineering drawings.

Dimensions – Frame Size F

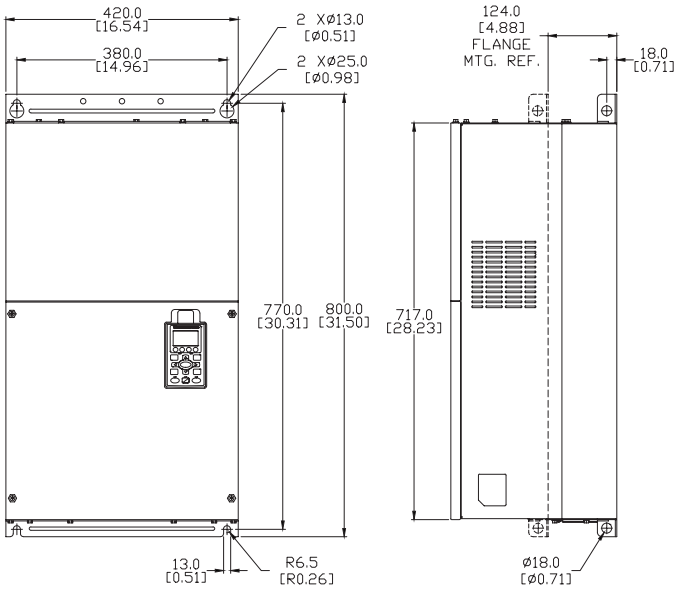

Dimensions – Frame Size F with Conduit Box

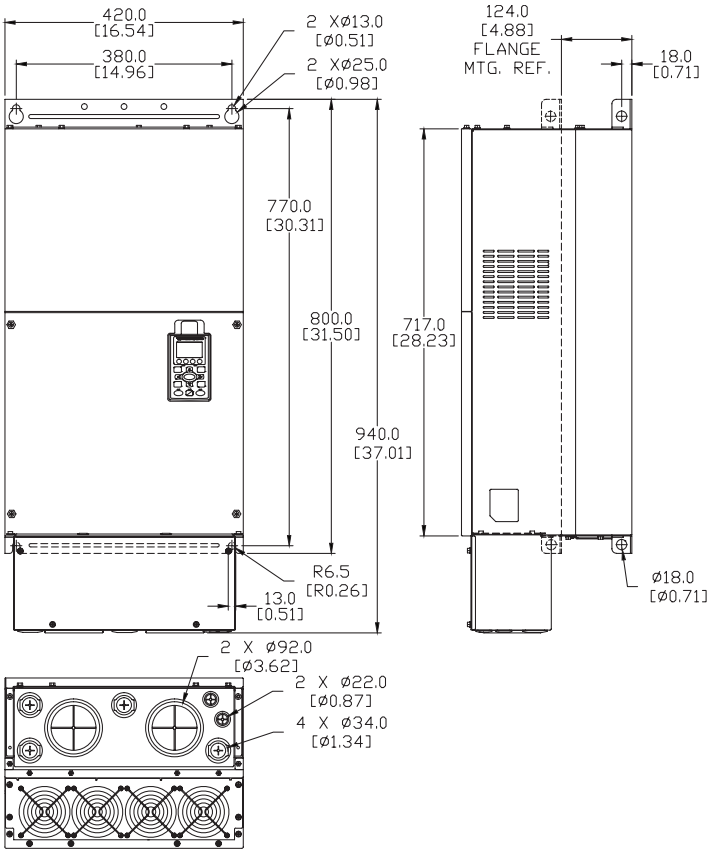

DURAPULSE GS4 AC Drives – Dimensions

Dimensions – GS4 AC Drives (Units = mm [in])

See our website: www.AutomationDirect.com for complete engineering drawings.

Dimensions – Frame Size G

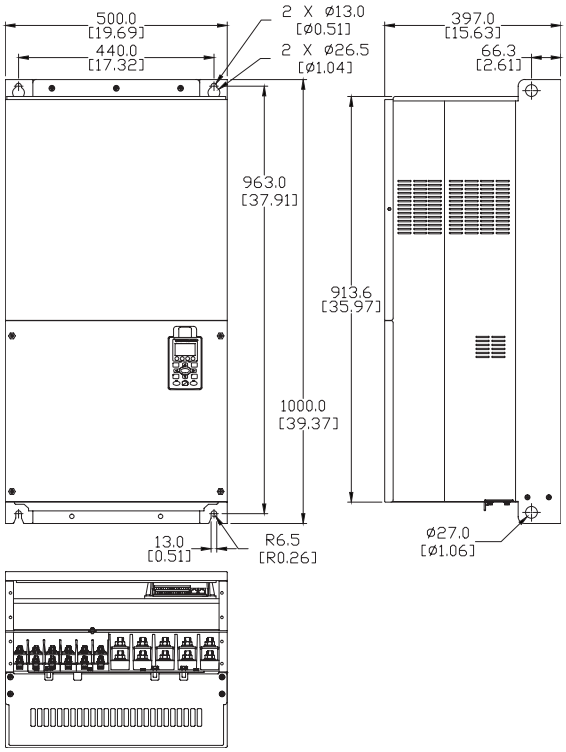

Dimensions – Frame Size G with Conduit Box

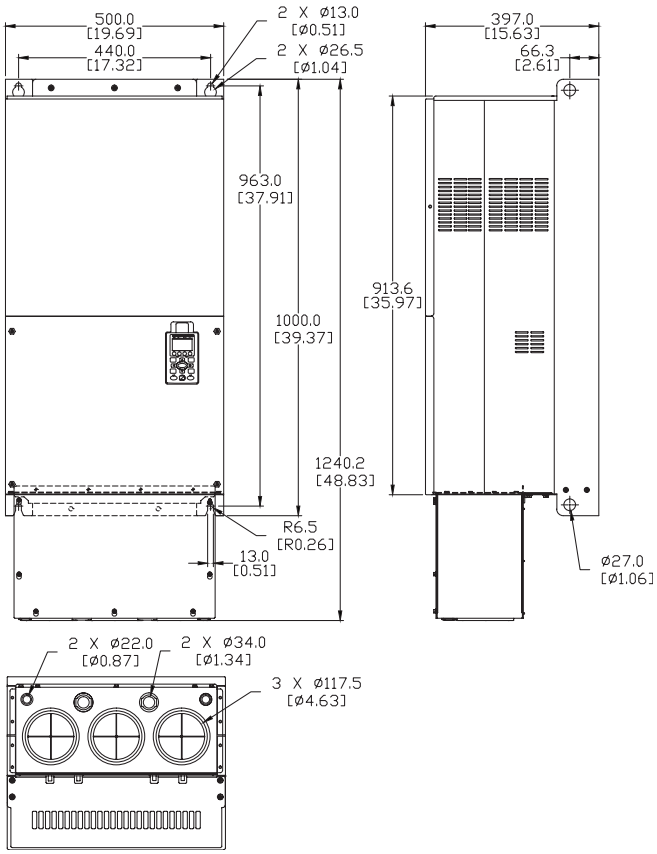

AC Drives Optional Accessories – Overview

Drive Accessories
(not all accessories are applicable for every drive model)

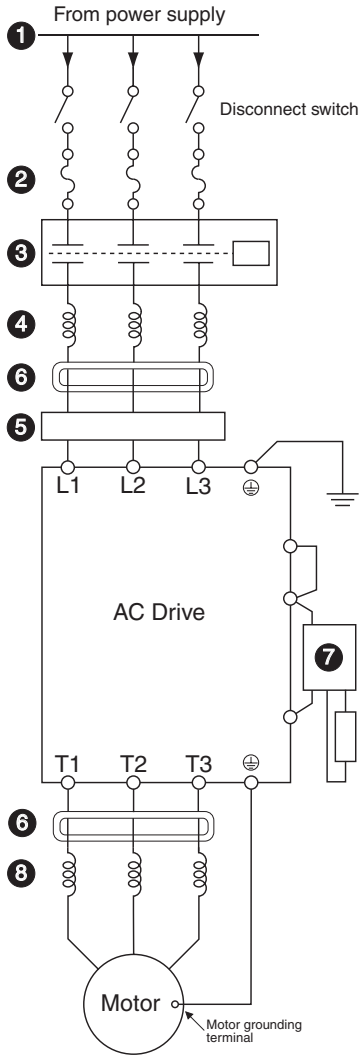

❶ Power Supply

Please follow the specific power supply requirements as detailed in the specific drive manual.

❷ Fuses

Input fuses protect the AC drive from excessive input current due to line surges, short circuits, and ground faults. They are recommended for all installations and may be required for UL-listed installations.

❸ Contactor (Optional)

Do not use a contactor or disconnect switch for run/stop control of the AC drive and motor. This will reduce the operating life cycle of the AC drive. Cycling a power circuit switching device while the AC drive is in run mode should be done only in emergency situations.

❹ Input Line Reactor (Optional)

See the Line Reactors section at www.automationdirect.com for more information.

Input line reactors protect the AC drive from transient overvoltage conditions, typically caused by utility capacitor switching. The input line reactor also reduces the harmonics associated with AC drives. Input line reactors are recommended for all installations.

❺ EMI filter (Optional)

See the EMI Filters section at www.automationdirect.com for more information.

Input EMI filters reduce electromagnetic interference or noise on the input side of the AC drive. They are required for CE compliance and recommended for installations prone to or sensitive to electromagnetic interference.

❻ RF filter (Optional)

RF filters reduce the radio frequency interference or noise on the input or output side of the inverter.

❼ Braking Unit and/or Braking Resistor (Optional)

Dynamic braking allows the AC drive to produce additional braking (stopping) torque. AC drives can typically produce between 15% & 20% braking torque without the addition of any external components. The addition of optional braking may be required for applications that require rapid deceleration or high inertia loads.

❽ Output Load Reactor or Voltage Time (dV/dT) Filter (Optional)

Output line reactors protect the motor insulation against AC drive short circuits and IGBT reflective wave damage, and also "smooth" the motor current waveform, allowing the motor to run cooler. They are **recommended for operating "noninverter-duty" motors and when the length of wiring between the AC drive and motor is less than 100 feet.**

Voltage Time filters provide enhanced protection for motors with distances up to 1,000 feet.

Voltage Time filters provide even more protection against wave reflection and reduce common mode noise. They are recommended when the length of wiring between the AC drive and motor is from 100 feet up to 1,000 feet.

See www.automationdirect.com for specific product offerings.

GS4 DURApulse Drives Accessories – Line-Side Reactors

Line-Side Reactors for GS4/*DURA*PULSE AC Drives – Selection Specifications

Supply: 230V, 1Ø, 50/60 Hz (*Constant* Torque; reactor installed *Line* Side)									
GS4 Model	Derated Output (hp)*	CT: 1Ø Input Amps (rms)**	Saturation Amps (rms)	Inductance (mH)		Max Motor kW	LR Model	Rated Amps	LR 3% Inductance
				3% Impedance	5% Impedance				
GS4-21P0	0.5	4.2	7.6	2.506	4.176	0.37	LR2-20P5-1PH	4.9	3.74
GS4-22P0	0.75	5.6	10.1	1.879	3.132	0.25	LR-21P0-1PH	8	2.29
GS4-23P0	1	8.7	15.7	1.210	2.016	0.25	LR-21P0-1PH	8	2.29
GS4-25P0	2	14	25	0.752	1.253	0.37	LR-22P0-1PH	12.0	1.53
GS4-27P5	3	19	34	0.554	0.923	0.75	LR-23P0-1PH	17.0	1.08
GS4-2010	3	19	34	0.554	0.923	0.75	LR-23P0-1PH	17.0	1.08
GS4-2015	5	30	54	0.351	0.585	3.7	LR-2010	30.8	0.342
GS4-2020	7.5	43	77	0.245	0.408	5.5	LR-2015	46.2	0.220
GS4-2025	10	57	103	0.184	0.307	7.5	LR-2020	59.4	0.172
GS4-2030	10	57	103	0.184	0.307	7.5	LR-2020	59.4	0.172
GS4-2040	10	57	103	0.184	0.307	7.5	LR-2020	59.4	0.172
GS4-2050	10	57	103	0.184	0.307	7.5	LR-2020	59.4	0.172
GS4-2060	15	85	153	0.124	0.206	11	LR-2025	74.8	0.138
GS4-2075	20	113	203	0.093	0.155	15	LR-2040	114	0.0886
GS4-2100	25	130	234	0.081	0.135	18.5	LR-2050	143	0.0699

** Drive output HP is derated when supplied single phase.*
*** Amperage ratings expressed in the column CT: 1Ph Input Amps (rms) are with a line reactor installed on the line side of the drive.*

GS4 DURApulse Drives Accessories – Load-Side Reactors

Load-Side Reactors for GS4/*DURA*PULSE AC Drives – Selection Specifications

Supply: 230V, 1Ø, 50/60 Hz (*Constant* Torque; reactor installed *Load* Side)									
GS4 Model	HP	CT: 3Ø Output Amps (rms)*	Saturation Amps (rms)	Inductance (mH)		Max Motor kW	LR Model	Rated Amps	LR 3% Inductance
				3% Impedance	5% Impedance				
GS4-21P0	0.5	2.4	4.3	2.893	4.822	0.37	LR-20P5	2.4	4.2
GS4-22P0	0.75	3.2	5.8	2.170	3.617	0.55	LR-21P0	4.6	2.46
GS4-23P0	1	5.0	9.0	1.397	2.328	0.75	LR-21P0	4.6	2.46
GS4-25P0	2	8	14	0.868	1.447	1.5	LR-23P0	10.6	0.97
GS4-27P5	3	11	20	0.640	1.066	2.2	LR-23P0	10.6	0.97
GS4-2010	3	11	20	0.640	1.066	2.2	LR-23P0	10.6	0.97
GS4-2015	5	17	31	0.405	0.675	3.7	LR-25P0	16.7	0.626
GS4-2020	7.5	25	45	0.283	0.471	5.5	LR-27P5	24.2	0.434
GS4-2025	10	33	59	0.213	0.354	7.5	LR-2010	30.8	0.342
GS4-2030	10	33	59	0.213	0.354	7.5	LR-2010	30.8	0.342
GS4-2040	10	33	59	0.213	0.354	7.5	LR-2010	30.8	0.342
GS4-2050	10	33	59	0.213	0.354	7.5	LR-2010	30.8	0.342
GS4-2060	15	49	88	0.143	0.238	11	LR-2015	46.2	0.22
GS4-2075	20	65	117	0.108	0.179	15	LR-2020	59.4	0.172
GS4-2100	25	75	135	0.093	0.156	18.5	LR-2025	74.8	0.138

** Amperage ratings are 3-phase output reactor ratings when the drive is supplied with a single-phase input.*

GS4 *DURA*PULSE Drives Accessories – Line/Load Reactors

Line/Load Reactors for GS4/*DURA*PULSE AC Drives – Selection Specifications

Supply: 230V, 3Ø, 50/60 Hz (*Variable* Torque; reactor installed *Line* or *Load* Side)

GS4 Model	hp	VT: 3Ø Output Amps (rms)	Saturation Amps (rms)	Inductance (mH)		Max Motor kW	LR Model*	Rated Amps	LR 3% Inductance
				3% Impedance	5% Impedance				
GS4-21P0	1	5	8.7	2.536	4.226	0.75	LR-21P0	4.6	2.46
GS4-22P0	2	8	12.8	1.585	2.641	1.5	LR-23P0*	10.6	0 .97
GS4-23P0	3	11	18	1.152	1.921	2.2	LR-23P0	10.6	0.97
GS4-25P0	5	17	29	0.746	1.244	3.7	LR-25P0	16.7	0.626
GS4-27P5	7.5	25	43	0.507	0.845	5.5	LR-27P5	24.2	0.434
GS4-2010	10	33	56	0.320	0.534	7.5	LR-2010	30.8	0.342
GS4-2015	15	49	85	0.216	0.359	11	LR-2015	46.2	0.22
GS4-2020	20	65	112	0.163	0.271	15	LR-2020	59.4	0.172
GS4-2025	25	75	128	0.169	0.282	18.5	LR-2025	74.8	0.138
GS4-2030	30	90	155	0.141	0.236	22	LR-2040*	114	0.0886
GS4-2040	40	120	205	0.106	0.176	30	LR-2040	114	0.0886
GS4-2050	50	146	250	0.087	0.146	37	LR-2050	143	0.0699
GS4-2060	60	180	308	0.070	0.117	45	not available*	169	0.0624
GS4-2075	75	215	367	0.059	0.098	55		211	0.0487
GS4-2100	100	255	436	0.049	0.082	75		273	0.0364

** Some GS4 drive and reactor combinations do not fit the typical "pattern" of having similar part numbers, due to some GS4 models having higher outputs than previous GS DURApulse drives.*

Supply: *460V*, 3Ø, 50/60 Hz (*Variable* Torque; reactor installed *Line* or *Load* Side)

GS4 Model	hp	VT: 3Ø Output Amps (rms)	Saturation Amps (rms)	Inductance (mH)		Max Motor kW	LR Model	Rated Amps	LR 3% Inductance
				3% Impedance	5% Impedance				
GS4-41P0	1	3	5.2	8.102	13.503	0.75	LR-41P0	2.1	8.927
GS4-42P0	2	4	6.8	6.077	10.128	1.5	LR-42P0	3.4	5.790
GS4-43P0	3	6	10.3	4.050	6.751	2.2	LR-43P0	4.8	4.270
GS4-45P0	5	9	14.6	2.700	4.500	3.7	LR-45P0	7.6	2.770
GS4-47P5	7.5	12	20	2.025	3.375	5.5	LR-47P5	11	1.680
GS4-4010	10	18	31	1.174	1.957	7.5	LR-4010	14	1.290
GS4-4015	15	24	41	0.881	1.468	11	LR-4015	21	0.912
GS4-4020	20	32	54	0.660	1.101	15	LR-4020	27	0.694
GS4-4025	25	38	65	0.639	1.066	18.5	LR-4025	34	0.569
GS4-4030	30	45	77	0.541	0.901	22	LR-4030	40	0.469
GS4-4040	40	60	103	0.405	0.675	30	LR-4040	52	0.387
GS4-4050	50	73	124	0.334	0.556	37	LR-4050	65	0.295
GS4-4060	60	91	155	0.267	0.445	45	LR-4060	77	0.227
GS4-4075	75	110	189	0.221	0.368	55	LR-4075	96	0.196
GS4-4100	100	150	257	0.162	0.270	75	LR-4100	124	0.152
GS4-4125	125	180	308	0.135	0.224	90	LR-4125	156	0.117
GS4-4150	150	220	376	0.110	0.184	110	LR-4150	180	0.103
GS4-4175	175	260	445	0.098	0.163	132	LR-4200	240	0.0839
GS4-4200	215	310	531	0.078	0.130	160	LR-4250	302	0.0654
GS4-4250	250	370	634	0.066	0.109	185	LR-4250	302	0.0654
GS4-4300	300	460	787	0.054	0.090	220	LR-4300	361	0.0565

GS/*DURA*PULSE Drives Accessories – Line/Load Reactors

Line/Load Reactors for GS/*DURA*PULSE AC Drives – Additional Specifications

Line Reactors – LR Series – Additional Specifications							
Part Number	Price	Product Weight	Wire Range	Terminal Torque	Temperature Range		Environment
					Operating	Storage	
LR-20P5	Retired	4.0 lb [1.8 kg]	#12–#18 AWG	10 lb·in	-40 – 104 °F [-40 – 40 °C]	-40 – 149 °F [-40 – 65 °C]	NEMA: open IP00 no corrosive gases
LR-21P0-1PH	$78.00	2.8 lb [1.3 kg]	#12–#18 AWG	10 lb·in			
LR-22P0-1PH	$86.00	4.3 lb [2.0 kg]	#12–#18 AWG	20 lb·in			
LR-23P0-1PH	Retired	4.3 lb [2.0 kg]	#12–#18 AWG	20 lb·in			
LR-23P0	Retired	4.0 lb [1.8 kg]	#12–#18 AWG	10 lb·in			
LR-25P0	$194.00	8.0 lb [3.6 kg]	#18–#4 AWG	20 lb·in			
LR-27P5	$206.00	8.0 lb [3.6 kg]	#18–#4 AWG	20 lb·in			
LR-2010	$242.00	12 lb [5.4 kg]	#18–#4 AWG	20 lb·in			
LR-2015	$285.00	12 lb [5.4 kg]	#18–#4 AWG	20 lb·in			
LR-2020	$312.00	12 lb [5.4 kg]	#18–#4 AWG	20 lb·in			
LR-2025	$460.00	15 lb [6.8 kg]	#18–#4 AWG	#18–#16 AWG: 25 lb·in #14–#6 AWG: 30 lb·in #4 AWG: 35 lb·in			
LR-2030	$490.00	33 lb [15 kg]	2/0 – #6AWG (AL or CU)	120			
LR-2040	$574.00	33 lb [15 kg]	2/0 – #6AWG (AL or CU)	120			
LR-2050	$670.00	36 lb [16 kg]	250kcmil – #6AWG (AL or CU)	275			
LR-4010	Retired	4.0 lb [1.8 kg]	#12–#18 AWG	10 lb·in			
LR-4015	$237.00	8.0 lb [3.6 kg]	#18–#4 AWG	20 lb·in			
LR-4020	$276.00	8.0 lb [3.6 kg]	#18–#4 AWG	20 lb·in			
LR-4025	$290.00	10 lb [4.5 kg]	#18–#4 AWG	20 lb·in			
LR-4030	$347.00	10 lb [4.5 kg]	#18–#4 AWG	20 lb·in			
LR-4040	$382.00	15 lb [6.8 kg]	#18–#4 AWG	20 lb·in			
LR-4050	$448.00	25 lb [11 kg]	#22–#4 AWG	#22–#16 AWG: 25 lb·in #14–#6 AWG: 30 lb·in #4 AWG: 35 lb·in			
LR-4060	$462.00						
LR-4075	$700.00	33 lb [15 kg]	2/0 – #6AWG (AL or CU)	120 lb·in			
LR-4100	$840.00	46 lb [21 kg]	250kcmil – #6AWG (AL or CU)	275 lb·in			
LR-4125	$962.00	46 lb [21 kg]	250kcmil – #6AWG (AL or CU)	275 lb·in			
LR-4150	$1,114.00	46 lb [21 kg]	250kcmil – #6AWG (AL or CU)	275 lb·in			
LR-4200	$1,238.00	74 lb [34 kg]	(1) 600kcmil – #4 AWG (2) 250kcmil – 1/0	500 lb·in			
LR-4250	$1,403.00	74 lb [34 kg]	(2)* 350kcmil – #4 AWG (AL or CU)	275 lb·in			
LR-4300	$1,546.00	74 lb [34 kg]	(2)* 350kcmil – #4 AWG (AL or CU)	275 lb·in			
LR-5010	Retired	4.0 lb [1.8 kg]	#12–#18 AWG	10 lb·in			

** LR-4250 & LR-4300 have dual-connector lugs, and will require multiple conductors per phase of the appropriate size to fit the lugs.*

GS4 *DURA*PULSE Drives Accessories – Dynamic Braking Component Selection

Dynamic Braking Components

Use the table below to find the appropriate braking resistor and braking unit (if applicable) for your GS4 series AC drive. For more information and installation instructions, please see the GS4 User Manual. All listed resistors are available for purchase at www.automationdirect.com.

GS4 AC Drive Braking Component Selection

Drive Voltage	Motor Power (hp)	Drive Model	Drive Brake Capacity - Max Torque		Braking Unit		125% Braking Torque @ 10% Duty Cycle*								
							Open Type Braking Resistor					NEMA1 Resistors with Thermal Switch			
			Min Resistor Value (Ω)	Max Total Brake Current (A)	Quantity	Part # GS-	Part #	Quantity	Wiring Diagram	Brake Torque (kg·m)	Total Brake Current (A)	Part #	Qty.	Wiring Diagram	Total Brake Current (A)
230V	1	GS4-21P0	63.3	6	–	n/a	GS-BR-080W200	1	A	0.5	1.9	BR-N1-240W150	1	A	2.6
	2	GS4-22P0	47.5	8			GS-BR-200W091	1		1.0	4.2	BR-N1-280W50	1		7.8
	3	GS4-23P0	38.0	10			GS-BR-300W070	1		1.5	5.4		1		
	5	GS4-25P0	19.0	20			GS-BR-400W040	1		2.5	9.5	BR-N1-800W25	1		15.6
	7.5	GS4-27P5	14.6	26			GS-BR-1K0W020	1		3.7	19	BR-N1-800W18P0	1		21.7
	10	GS4-2010	14.6	26				1		5.1		BR-N1-1K1W15P0	1		26.0
	15	GS4-2015	12.6	28			GS-BR-1K5W013	1		7.5	29	BR-N1-1K5W14P0	1		27.9
	20	GS4-2020	8.3	46			GS-BR-1K0W4P3	2S	B	10.2	44	BR-N1-2K2W08P6	1		45.3
	25	GS4-2025	8.3	46				2S		12.2			1		
	30	GS4-2030	5.8	66			GS-BR-1K5W3P3	2S		14.9	58	BR-N1-3K0W05P8	1		67.2
	40	GS4-2040	4.8*	80*	2	1DBU	Not offered					BR-N1-1K6W10P0	2 (1/DBU)	F	79*
	50	GS4-2050	3.2*	120*	2	2DBU						BR-N1-2K2W06P8	2 (1/DBU)		116*
	60	GS4-2060	3.2*	120*	2	2DBU						BR-N1-3K6W06P8	2 (1/DBU)		
	75	GS4-2075	2.1*	180*	3	2DBU						BR-N1-2K2W06P8	3 (1/DBU)		
	100	GS4-2100	1.6*	240*	4	2DBU							4 (1/DBU)		
460V	1	GS4-41P0	190	4	–	n/a	GS-BR-080W750	1	A	0.5	1	BR-N1-240W200	1	A	4.0
	2	GS4-42P0	126.7	6			GS-BR-200W360	1		1	2.1	BR-N1-240W150	1		5.3
	3	GS4-43P0	108.6	7			GS-BR-300W250	1		1.5	3	BR-N1-500W200	1		4.0
	5	GS4-45P0	84.4	9			GS-BR-400W150	1		2.5	5.1	BR-N1-500W130	1		6.1
	7.5	GS4-47P5	54.3	14			GS-BR-1K0W075	1		3.7	10.2	BR-N1-720W85	1		9.3
	10	GS4-4010	47.5	16				1		5.1		BR-N1-1K2W50	1		15.8
	15	GS4-4015	42.2	18			GS-BR-1K5W043	1		7.5	17.6	BR-N1-1K5W40	1		19.8
	20	GS4-4020	26.2	29			GS-BR-1K0W016	2S	B	10.2	24	BR-N1-1K7W30	1		26.3
	25	GS4-4025	23.0	33				2S		12.2		BR-N1-2K3W26	1		30.4
	30	GS4-4030	23.0	33			GS-BR-1K5W013	2S		14.9	29	BR-N1-2K8W25	1		31.6
	40	GS4-4040	14.1	54			GS-BR-1K0W016	4 (2S/2P)	D	20.3	47.5	BR-N1-4K0W16P0	1		49.4
	50	GS4-4050	12.7*	60*	1	4DBU	Not offered					BR-N1-4K7W14P7	1	F	53.7
	60	GS4-4060	12.7*	60*	1	4DBU						BR-N1-6K9W13P6	1		58.1
	75	GS4-4075	9.5*	80*	2	3DBU						BR-N1-3K6W20	2 (1/DBU)		39.5*
	100	GS4-4100	6.3*	120*	2	4DBU						BR-N1-4K7W14P7	2 (1/DBU)		53.7*
	125	GS4-4125	6.3*	120*	2	4DBU						BR-N1-6K9W13P6	2 (1/DBU)		58.1*
	150	GS4-4150	6.0*	126*	1	5DBU						BR-N1-13K0W06P4	1		123.4
	175	GS4-4175	4.0*	190*	1	6DBU						BR-N1-18K0W03P7	1		213.5
	200	GS4-4200	4.0*	190*	1	6DBU							1		
	250	GS4-4250	3.4*	225*	1	7DBU							1		210.8
	300	GS4-4300	3.0*	252*	2	5DBU						BR-N1-13K0W06P4	2 (1/DBU)		123.4*

** These values are per individual DBU, as seen between DBU terminals B1 and B2.*
*** 10% Duty Cycle with maximum ON (braking) time of 10 seconds.*

GSxx *DURA*PULSE Drives Accessories – Dynamic Braking Component Selection

Brake Wiring

Use your drive's Braking Component Selection table to determine the appropriate brake resistor model and configuration for your drive. Refer to the diagrams below for examples on how to wire each possible configuration

Diagram A (Drive + 1 Resistor or NEMA1 Resistor):

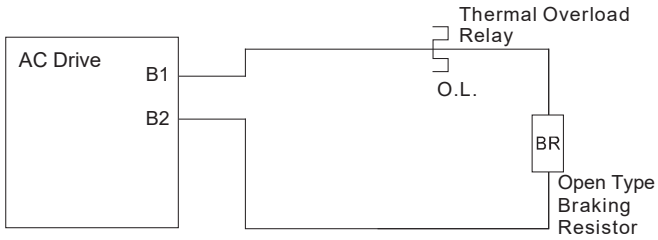

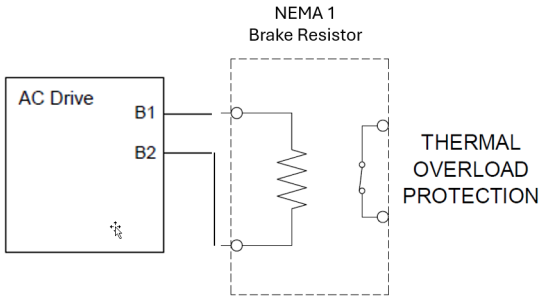

Diagram B (Drive + 2 Series Resistors):

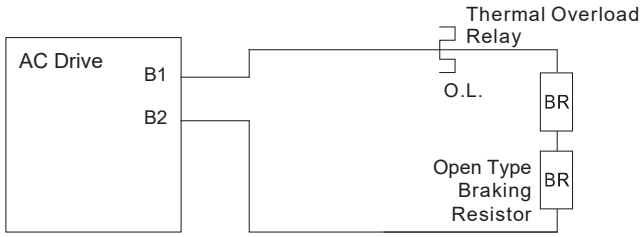

Diagram C (Drive + 2 Parallel Resistors):

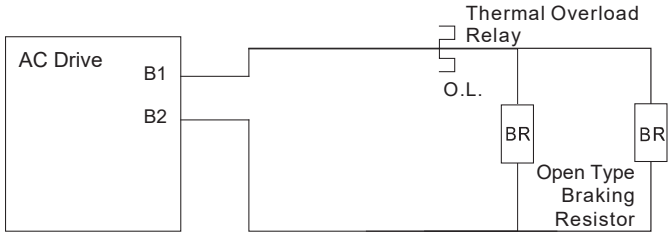

Diagram D (drive + 2 Series and 2 Parallel Resistors):

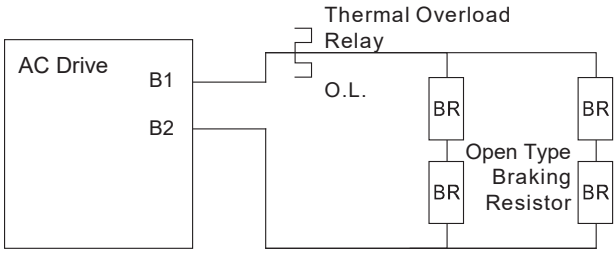

GSxx *DURA*PULSE Drives Accessories – Dynamic Braking Component Selection

Brake Wiring, *continued*

Diagram E (Drive + 1 DBU with 1 NEMA1 Resistor:

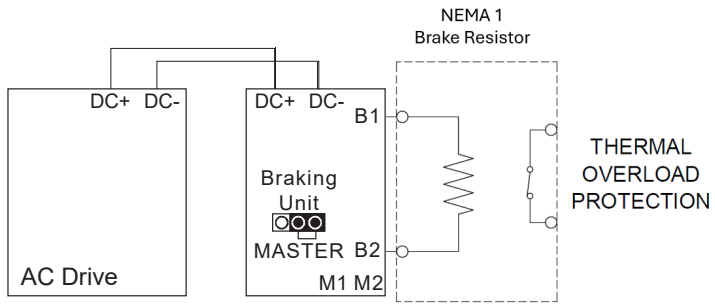

Diagram F (Drive + DBUs with 1 Resistor or NEMA1 Resistor per DBU):

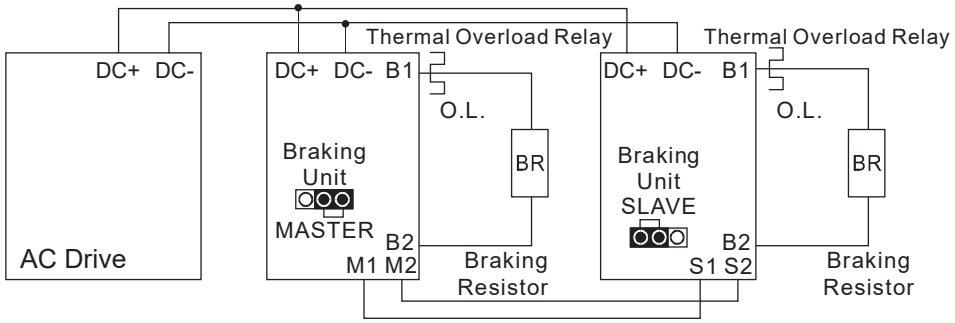

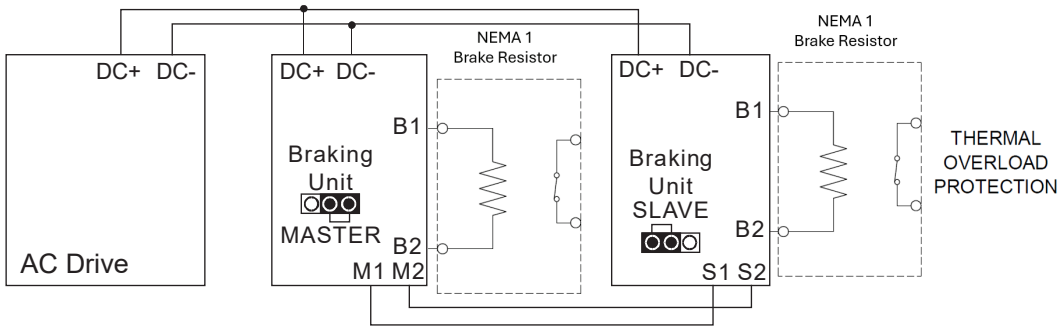

GS/*DURA*PULSE Drives Accessories – Braking Unit Specifications for GS4 & GS30 *DURA*PULSE AC Drives

Braking Units for DURApulse AC Drives

Overview

Braking units are applied to absorb the motor regeneration energy when the three-phase induction motor stops by deceleration.

GS-xDBU braking units, used with GS series braking resistors, provide optimum braking performance.

Note: Braking units are available ONLY for DURApulse drives.

WARNING: TO AVOID INJURY OR MECHANICAL DAMAGE, PLEASE REFER TO USER MANUAL GS-DB_UMP BEFORE WIRING.

Dynamic Braking Unit Specifications – for GS4 & GS30 *DURA*PULSE AC Drives								
Braking Unit Part Number		GS-1DBU	GS-2DBU	GS-3DBU	GS-4DBU	GS-5DBU	GS-6DBU	GS-7DBU
Price		$269.00	$269.00	$364.00	$364.00	$1,517.00	$1,578.00	$1,732.00
Nominal Voltage (VAC)		230		460				
Max Motor Capacity (hp/[kW])		20 [15]	30 [22]	40 [30]	60 [45]	150 [110]	200 [160]	250 [185]
Output Rating	**Max Discharge Current (A) @ 10% Duty Cycle***	40	60	40	60	126	190	225
	Continuous Discharge Current (A)	15	20	15	18	45	50	100
	Braking Startup Voltage (VDC)	330/345/360/ 380/400/415 ±3V		600/690/720/ 760/800/830 ±6V		618/642/667/690/ 725/750 ±6V		
	Maximum On-Time (s)	10						
Input DC Voltage (VDC)		200–400		400–800		400–750		
Min Equivalent Resistor for Each Braking Unit (Ω)		10	6.8	20	13.6	6	4	3.4
Protection	**Power CHARGE Lamp/LED**	Comes ON until DC bus voltage (+P – -N) drops below 50VDC				Comes ON when DC bus voltage (DC+ – DC-) rises above 300VDC. Goes OFF when DC bus voltage (DC+ – DC-) drops below 100VDC.		
	Braking ACT Lamp/LED	ON during braking						
	Fault ERR Lamp	ON if a fault has occurred				n/a		
	Overcurrent Level LED (A)	n/a				190	290	340
	Overheat LED	n/a				Comes ON > 176°F [80°C]; Goes OFF < 149°F [65°C]		
	Heat Sink Overheat Temperture	203°F [95°C]				n/a		
	Alarm Output Relay Contact	5A @ 120VAC/28VDC (RA,RB,RC)				3A @ 250VAC/28VDC (RA,RC)		
Environment	**Installation Location**	indoor (no corrosive gases; no metallic dust)						
	Operating Temperature	14°F to 122 °F [-10 to +50 °C]						
	Storage Temperature	-4 to +140 °F [-20 to +60 °C]						
	Humidity	less than 90% RH, non-condensing						
	Vibration	9.8 m/s^2 [1G] under 20Hz ; 2m/s^2 [0.2G] at 20–50 Hz						
Mechanical Configuration		IP50 wall-mount enclosed				IP10 wall-mount enclosed		

** 10% Duty Cycle with maximum ON (braking) time of 10 seconds*

GS/*DURA*PULSE Drives Accessories – Braking Unit Basic Wiring for GS4 & GS30 *DURA*PULSE AC Drives

Basic Dynamic Braking Wiring Diagram for GS4 & GS30 *DURA*PULSE AC Drives

Note: Smaller-capacity DURApulse AC Drives can connect directly to braking resistors, and do not require Dynamic Braking Units for braking. Other applications require multiple Resistors and/or multiple Dynamic Braking Units. Refer to "Dynamic Braking Component Selection" to determine which braking components are required for your application(s), and to the DURApulse Drives Dynamic Braking User Manual for complete wiring diagrams.

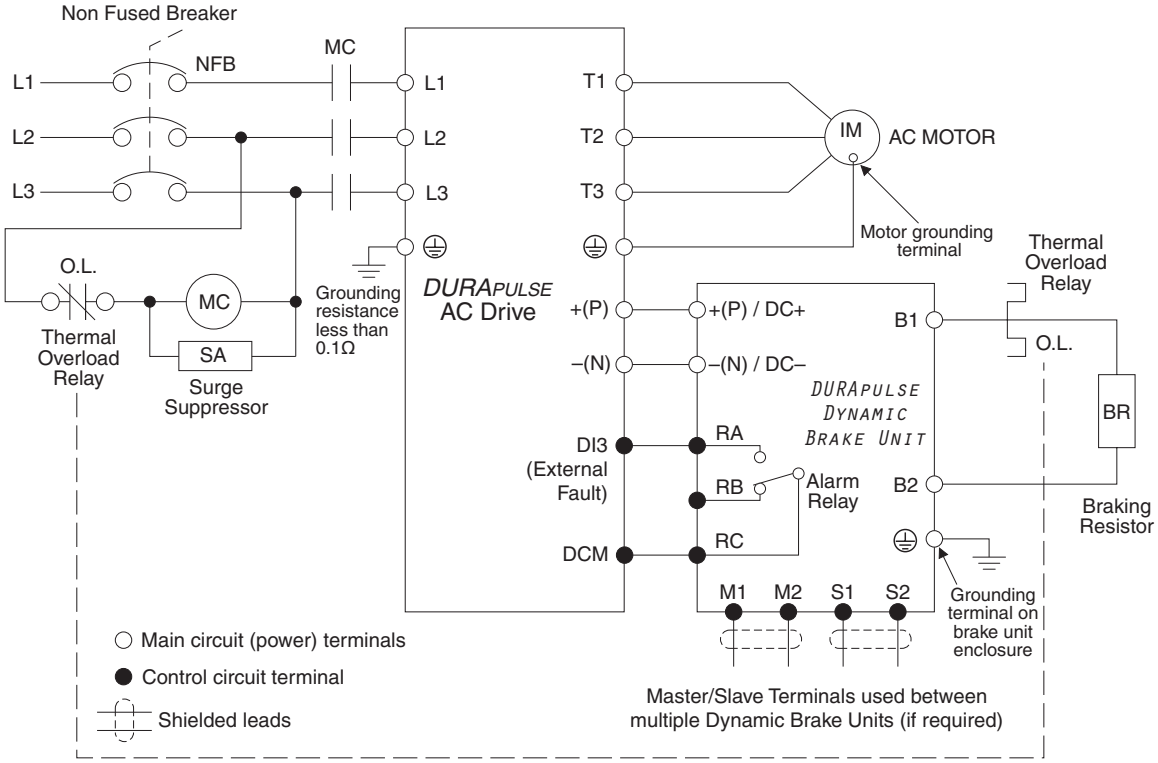

GS/*DURA*PULSE Drives Accessories – Braking Unit Dimensions for GS4 & GS30 *DURA*PULSE AC Drives

Braking Unit Dimensions (Dimensions = mm [in])

See our website: www.AutomationDirect.com for complete engineering drawings.

A) DBU ≤ 100hp (GS-1DBU, GS-2DBU, GS-3DBU, GS-4DBU)

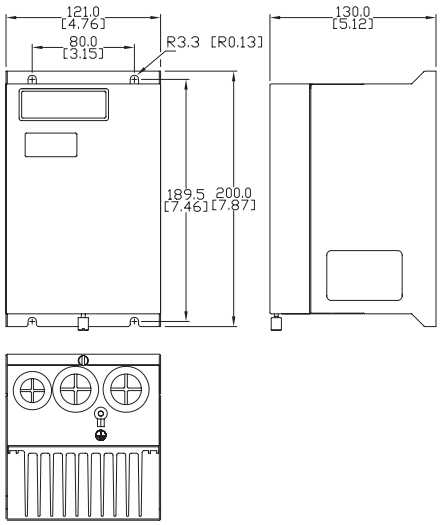

B) DBU > 100hp (GS-5DBU, GS-6DBU, GS-7DBU)

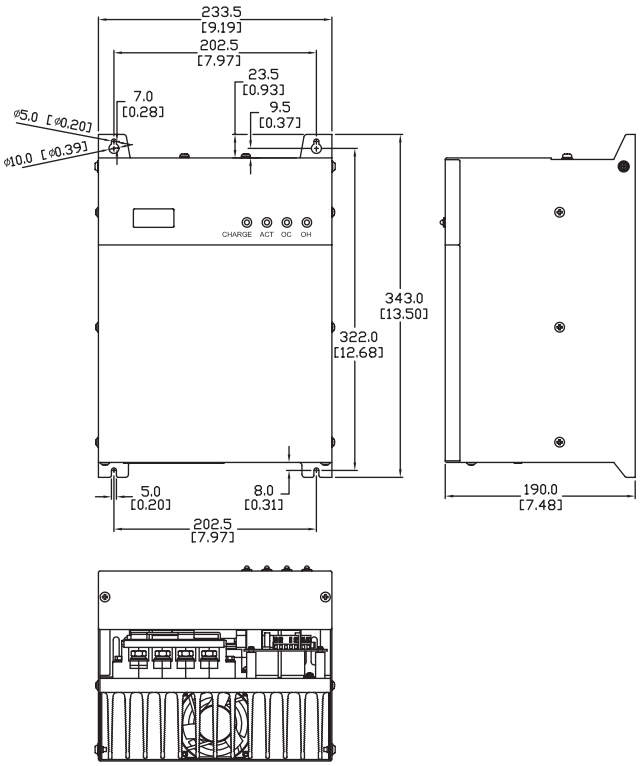

GS4 *DURA*PULSE Accessories – EMI Filters Selection

Selection (GS4)

The optional EMI Filters listed here are available for use with the GS4 drive. Selection of these accessories is application-specific and may improve drive performance. Additional information regarding filter installation and operation is available in the AutomationDirect white paper, "Applied EMI/RFI Techniques," downloadable from AutomationDirect.com.

EMI Filters Selection for GS4 AC Drives

Model*	Description	EMI Filter **	Max Power kW [max/ph]	Max Torque kg·cm [lb·in]	SCCR Rating (kA)
GS4-21P0	230V 1ph/3ph 1.0 hp	KMF325A	20.8 [6]	17.7 [2]	5
GS4-22P0	230V 1ph/3ph 2.0 hp				
GS4-23P0	230V 1ph/3ph 3.0 hp				
GS4-25P0	230V 1ph/3ph 5.0 hp				
GS4-27P5	230V 1ph/3ph 7.5 hp	KMF370A	58.1 [16.8]	44.2 [5]	5
GS4-2010	230V 1ph/3ph 10hp				
GS4-2015	230V 1ph/3ph 15hp				
GS4-4025	460V 3ph 25hp				
GS4-4030	460V 3ph 30hp				
GS4-4040	460V 3ph 40hp				
GS4-2020	230V 3ph 20hp	KMF3100A	83 [24]	44.2 [5]	10
GS4-2025	230V 3ph 25hp				
GS4-2030	230V 3ph 30hp				
GS4-41P0	460V 3ph 1.0 hp	KMF318A	14.9 [4.3]	17.7 [2]	5
GS4-42P0	460V 3ph 2.0 hp				
GS4-43P0	460V 3ph 3.0 hp				
GS4-45P0	460V 3ph 5.0 hp				
GS4-47P5	460V 3ph 7.5 hp				
GS4-4010	460V 3ph 10hp	KMF350A	41.5 [12]	44.2 [5]	10
GS4-4015	460V 3ph 15hp				
GS4-4020	460V 3ph 20hp				
GS4-4050	460V 3ph 50hp	MIF375	62.3 [18]	53.1 [6}	10
GS4-2040	230V 3ph 40hp	MIF3150	124.6 [36]	177 [20]	10
GS4-2050	230V 3ph 50hp				
GS4-4060	460V 3ph 60hp				
GS4-4075	460V 3ph 75hp				
GS4-4100	460V 3ph 100hp				
GS4-2060	230V 3ph 60hp	MIF3400B	332.2 [96]	265.5 [30]	30
GS4-2075	230V 3ph 75hp				
GS4-2100	230V 3ph 100hp				
GS4-4125	460V 3ph 125hp				
GS4-4150	460V 3ph 150hp				
GS4-4175	460V 3ph 175hp				
GS4-4200	460V 3ph 200hp				
GS4-4250	460V 3ph 250hp	MIF3800 & Qty. 3 TOR254	664.3 [192]	265.5 [30]	30
GS4-4300	460V 3ph 300hp				

** EMI filter selections for GS4-2xxx models are the same whether that particular model is supplied 1-Phase or 3-Phase 230VAC.*
*** Part numbers are Roxburgh EMI Filters available from AutomationDirect at the web link embedded with each part number listed above.*

GS4 *DURA*PULSE Accessories – Fusing

Fuse Selection for GS4 AC Drives

The fuses shown in the table below are available from AutomationDirect. Further information, including dimensional information, is available at AutomationDirect.com.

Fuse Specification Chart GS4 *DURA*PULSE Drives

Drive Model	For Three-Phase Input Power							For Single-Phase Input Power						
	HP	Input Power			Input Fuse ***			HP	Input Power			Input Fuse ***		
		Ø	Volts	GS4 Amps	Fuse Amps	Fast Acting Class T	Edison Class J*		Ø	Volts	GS4 Amps	Fuse Amps	Fast Acting Class T	Edison Class J*
GS4-21P0	1	3	230	6.4	10	TJN10	JHL10	0.5	1	230	6.4	10	TJN10	JHL10
GS4-22P0	2	3	230	12	15	TJN15	JHL15	0.75	1	230	9.7	15	TJN15	JHL15
GS4-23P0	3	3	230	16	25	TJN25	JHL25	1	1	230	15	20	TJN20	JHL20
GS4-25P0	5	3	230	20	35	TJN35	JHL35	2	1	230	20	30	TJN30	JHL30
GS4-27P5	7.5	3	230	28	50	TJN50	JHL50	3	1	230	26	40	TJN40	JHL40
GS4-2010	10	3	230	36	70	TJN70	JHL70	3	1	230	26	40	TJN40	JHL40
GS4-2015	15	3	230	52	100	TJN100	JHL100	5	1	230	40	70	TJN70	JHL70
GS4-2020	20	3	230	72	125	TJN125	JHL125	7.5	1	230	58	100	TJN100	JHL100
GS4-2025	25	3	230	83	150	TJN150	JHL150	10	1	230	76	125	TJN125	JHL125
GS4-2030	30	3	230	99	175	TJN175	JHL175	10	1	230	76	125	TJN125	JHL125
GS4-2040**	40	3	230	124	175	TJN175	JHL175	10	1	230	63	90	TJN90	JHL90
GS4-2050**	50	3	230	143	200	TJN200	JHL200	10	1	230	63	90	TJN90	JHL90
GS4-2060	60	3	230	171	250	TJN250	JHL250	15	1	230	94	150	TJN150	JHL150
GS4-2075	75	3	230	206	300	TJN300	JHL300	20	1	230	124	175	TJN175	JHL175
GS4-2100	100	3	230	245	350	TJN350	JHL350	25	1	230	143	200	TJN200	JHL200
GS4-41P0	1	3	460	4.3	6	TJS6	JHL6	single-phase input power not applicable for 460V						
GS4-42P0	2	3	460	5.9	10	TJS10	JHL10							
GS4-43P0	3	3	460	8.7	15	TJS15	JHL15							
GS4-45P0	5	3	460	14	20	TJS20	JHL20							
GS4-47P5	7.5	3	460	17	25	TJS25	JHL25							
GS4-4010	10	3	460	20	35	TJS35	JHL35							
GS4-4015	15	3	460	26	45	TJS45	JHL45							
GS4-4020	20	3	460	35	60	TJS60	JHL60							
GS4-4025	25	3	460	40	70	TJS70	JHL70							
GS4-4030	30	3	460	47	90	TJS90	JHL90							
GS4-4040**	40	3	460	63	125	TJS100	JHL100							
GS4-4050	50	3	460	74	100	TJS110	JHL110							
GS4-4060	60	3	460	101	125	TJS150	JHL150							
GS4-4075	75	3	460	114	150	TJS150	JHL150							
GS4-4100	100	3	460	157	200	TJS200	JHL200							
GS4-4125	125	3	460	167	250	TJS250	JHL250							
GS4-4150	150	3	460	207	300	TJS300	JHL300							
GS4-4175	175	3	460	240	350	TJS350	JHL350							
GS4-4200	200	3	460	300	450	TJS450	JHL450							
GS4-4250	250	3	460	380	500	TJS500	JHL500							
–	–					Fast Acting Current Limiting Class L								
GS4-4300	300	3	460	400	700	LCU700								

** High-speed Class J*
*** Includes DC choke*
**** The fuses listed above are available from AutomationDirect.com. (Individual web links are associated with each part number listed above.)*