*DURA*PULSE GS30 AC Drives – Introduction

*DURA*PULSE GS30 AC Drives																	
Motor Rating	HP	1/2	1	2	3	5	7.5	10	15	20	25	30	40	50	60	75	100
	kW	0.4	0.75	1.5	2.2	3.7	5.5	7.5	11	15	18.5	22	30	37	45	55	75
230V Single-phase		✓	✓	✓	✓												
230V Three-phase		✓	✓	✓	✓	✓	✓	✓	✓	✓	✓	✓	✓	✓			
460V Three-phase		✓	✓	✓	✓	✓	✓	✓	✓	✓	✓	✓	✓	✓	✓	✓	✓
✓ = GS30 model available																	

Overview

The DURAPulse GS30 high performance flux-vector drives provide advanced drive functionality—all in a compact unit that has been reduced 40% in size compared to its predecessor.

These new drives include the same standard features as our GS family of drives: dynamic braking, built-in PID control, removable keypad, and RS-485 Modbus communication.

The GS30 drive expands the DURApulse family by adding internal tension control loop expanded parameter sets for greater versatility. Optional EtherCAT® and single- or dual-port EtherNet/IP communication cards. Support for up to four (4) independent IM motor parameter sets or control of a single AC PM motor.

*DURA*pulse GS30 AC drives offer several control modes for induction or permanent magnet AC motors. Standard V/Hz and sensorless vector (SVC) modes provide quick setup and control. Field Oriented Vector control (FOC) provides high precision open loop control. For full closed loop vector control, FOCPG provides 1:1000 precision. Torque control mode, with open or closed loop control, is also available.

*DURA*PULSE GS30 offers two analog inputs, one analog output, seven digital inputs (including one pulse train input up to 33kHz), two digital outputs, one SPDT relay output, and two STO inputs. All of the analog and digital I/O can be configured for a wide variety of input or output functions. Two option card slots are available on all models so you can add additional I/O AND a communication card or backup power supply. This provides greater flexibility to equip the new GS30 to your specific needs.

Features

- Broad offering from 1/2 to 100 hp
- Single-phase 230VAC up to 3HP
- Three-phase 230VAC up to 50hp and 460VAC up to 100hp
- Dual rating design – CT/VT Ratings
- "Zero Stack" side-by-side zero gap installation
- Compact Design
- Advanced LCD keypad with parameter descriptions
- Spring clamp terminal blocks
- Quick setting wheel dial for quick speed changes and parameter scrolling
- Flexible carrier frequency to 15khz and output frequency to 599.0 Hz
- STO – Safe Torque Off (TÜV Certified)
- Built-in PLC to support up to 5K steps
- Built-in USB port for fast & easy programming
- Free downloadable software for drive configuration and PLC programming
- Field-upgradable firmware (drive & communication option cards)
- Local/Remote control mode selection or digital/comm input with Hand/Off/Auto control
- Display custom values/units on keypad
- Momentary power loss restarts
- 100kA Short Circuit Current Rating (Frames A-F)
- DC Bus Connection Terminals
- Analog I/O – configurable 2 Inputs and 1 Output
- Multi-Motor Control (4 total)
- Built-in Dynamic Braking (up to 30hp@230VAC, 40hp@460VAC) – optional resistors
- PID Controller – including sleep and wake
- Password protection
- RTD and/or PTC input motor protection
- Modularized design eases maintenance and expansion, including quick replacement of cooling fan
- High speed communication interfaces with MODBUS RTU built in, plus optional cards with additional interface types
- Circuit boards have conformal coating for improved environmental tolerance
- Excellent heat-sink design; able to operate at 50°C ambient temperature
- Fire Mode – Run fire mode during emergencies to have uninterrupted smoke removal and system pressure
- Two-year warranty
- CE, TÜV, UL, cUL approvals

Option Cards

- Ethernet communication interface – single or dual port cards supports both EtherNet/IP and ModbusTCP
- EtherCAT communication interface
- Encoder interface - open collector or line driver
- Extension I/O - discrete, relay, and analog
- Backup I/O power supply

Accessories

- AC line reactors
- dV/dT output filters
- EMI filters
- RF filter
- Braking resistors
- Fuses
- NEMA 1 Conduit boxes
- DIN rail mounting kits for drives up to 5hp
- Replacement cooling fans
- Replacement keypad
- Optional advanced LCD keypad (and remote-mount bezel kit)
- GSoft2 drive configuration software
- GSLogic PLC programming software
- Type A to B USB cable
- Detailed descriptions and specifications for GS30 accessories are available in the "GS/DURApulse Accessories" section.

Typical Applications

- Conveyors
- Compressors
- Material handling
- Extruding
- Grinding
- Shop tools
- Fans
- Pumps
- HVAC
- Mixing
- Unwinding
- Rewinding

Selecting the Proper Drive Rating

Selecting the Proper Drive Rating

Determine Motor Voltage and Full-Load Amperage (FLA)

Motor voltage and FLA are located on the nameplate of the motor.
NOTE: FLA of motors that have been rewound may be higher than stated.

Determine Motor Overload Requirements

Many applications experience temporary overload conditions due to starting requirements or impact loading. Most AC drives are designed to operate at 150% overload for 60 seconds. If the application requires an overload greater than 150% or longer than 60 seconds, the AC drive must be oversized.
NOTE: Applications that require replacement of existing motor starters with AC drives may require up to 600% overload.

Determine Application Type: Constant Torque or Variable Torque

This torque requirement has a direct effect on which drive to select. Variable Torque applications are generally easier to start; typically fans and pumps. Most other applications outside fans and pumps fall into the Constant Torque category (machine control, conveyors, etc.). If you are unsure of the application, assume Constant Torque. The specification, derating, and selection tables are generally segregated by Constant Torque and Variable Torque.

Installation Altitude

AC drives rely on air flow for cooling. As altitude increases, air becomes less dense. This decrease in air density derates the cooling properties of ambient air. Therefore, the AC drive must be oversized to compensate for the decrease in cooling. GS30 drives are designed to operate at 100% capacity at altitudes up to 1000 meters.
NOTE: For use above 1000m, the AC drive must be derated as described below.

Derate Output Current Based on Altitude Above 1000 Meters

- If the AC drive is installed at an altitude of 0–1000m, follow normal operation restrictions.
- If installed at an altitude of 1000–2000m, decrease 1% of the rated current or lower 0.5°C of temperature for every 100m increase in altitude.
- Maximum altitude for Corner Grounded is 2000m. If installation at an altitude higher than 2000m is required, please contact AutomationDirect.

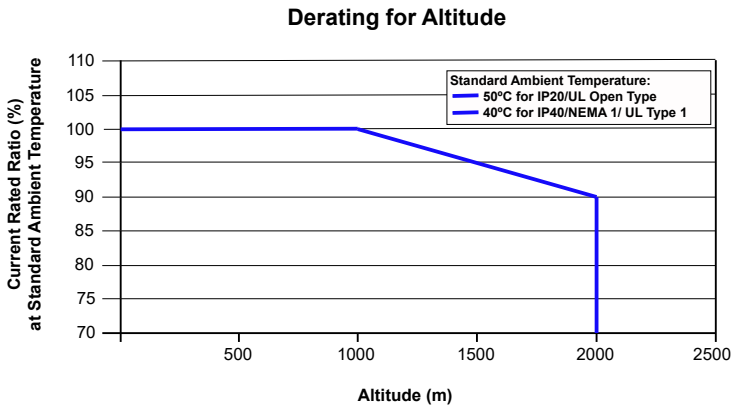

DURAPULSE GS30 AC Drives – Selection

Selecting the Proper Drive Rating, *continued*

Determine Maximum Enclosure Internal Temperature

AC drives generate a significant amount of heat and can cause the internal temperature of an enclosure to exceed the rating of the GS30 drive, even when the ambient temperature is less than 104°F (40°C). Enclosure ventilation and/or cooling may be required to reduce maximum internal temperature to 104°F (40°C) or less. Ambient temperature measurements/calculations should be made for the maximum expected temperature.

NOTE: For use above 104°F (40°C), the AC drive must be derated as described below.

Derate Output Current Based on Temperature Above 104°F (40°C) or 122°F (50°C)

Drive Derating by Temperature and Protection Level	
Protection Level	***Derating***
UL Open Type / IP20*	When the GS30 drive is operating at rated current, the ambient temperature has to be between -20°C and +50°C. When ambient temperature exceeds 50°C, decrease the rated current by 2.5% for every 1°C temperature increase. Maximum allowable temperature is 60°C.
UL Type 1 / NEMA 1 / IP40*	When the GS30 drive is operating at rated current, the ambient temperature has to be between -20°C and +40°C. When ambient temperature exceeds 40°C, decrease the rated current by 2.5% for every 1°C temperature increase. Maximum allowable temperature is 50°C.
**** For more information about environmental ratings, refer to "Environmental Conditions for GS30 AC Drives" on page tGSX-49.***	

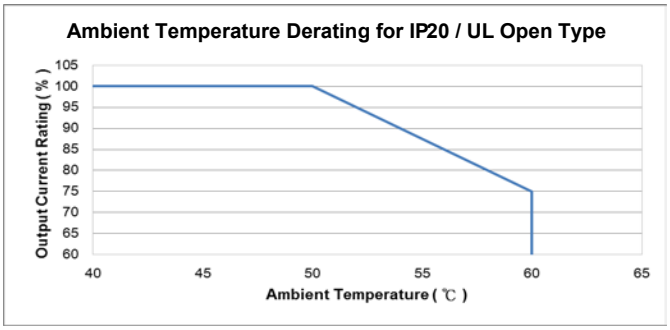

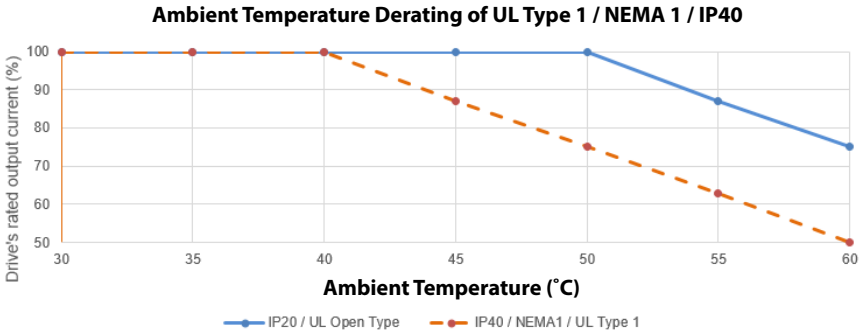

DURAPULSE GS30 AC Drives – Selection

Selecting the Proper Drive Rating, *continued*

Derate Output Current Based on Carrier Frequency (if necessary)

Carrier Frequency Effects

AC Drives rectify the incoming 50 or 60Hz line power resulting in DC power at 0Hz. The resulting DC power is then pulse-width modulated and supplied to the motor by the drive's power electronics. IGBTs invert the DC power, simulating a sine wave at the desired frequency (that's what allows variable speed in AC induction motors). The speed at which the IGBTs are turned ON and OFF is called Carrier Frequency. In GS30 drives, the Carrier Frequency can range from 2kHz to 15kHz. Though Carrier Frequency can be adjusted, there are trade-offs between high Carrier Frequencies and low Carrier Frequencies.

Benefits of Higher Carrier Frequencies:

- Better efficiency (lower harmonic losses) in the motor
- Lower audible noise

Benefits of Lower Carrier Frequencies:

- Better efficiency in the drive
- Lower EMI (electrical noise)
- Reduced reflective wave peak voltage

As a general rule, the Carrier Frequency should be set as low as possible without creating unacceptable audible noise in the motor. Smaller systems can have higher Carrier Frequencies, but larger drives (>20 or 30hp) should not have Carrier Frequencies set higher than 6kHz. Heavy duty applications typically run around 2–4 kHz.

Derating Tables

The tables below show the derating curves for 230V GS30 drives running in two different modes under variable torque and constant torque conditions.
Line 1: Ta = 50°C / Load = 100%
Line 2: Ta = 50°C / Load = 75% or Ta = 40°C / Load = 100%
Line 3: Ta = 50°C / Load = 50% or Ta = 35°C / Load = 100%

Set PWM mode via P11.41.
SVPWM = Space Vector Pulse Width Modulation mode
DPWM = Two Phase Pulse Width Modulation mode

230V Drive Variable Torque Carrier Frequency Derating

SVPWM Mode

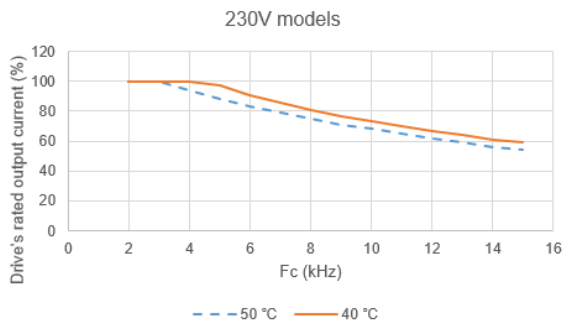

DPWM Mode

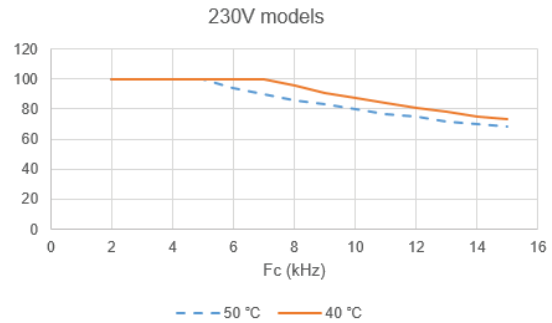

230V Drive Constant Torque Carrier Frequency Derating

SVPWM Mode

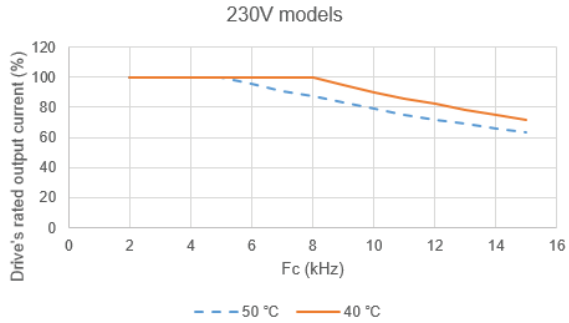

DPWM Mode

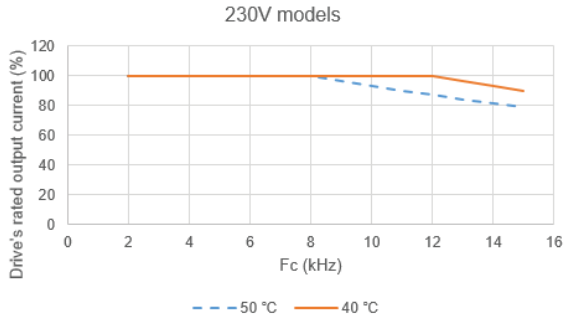

DURAPULSE GS30 AC Drives – Selection

Selecting the Proper Drive Rating, *continued*

Derate Output Current Based on Carrier Frequency (if necessary)

Derating Tables, continued

The tables below show the derating curves for 460V GS30 drives running in two different modes under variable torque and constant torque conditions.
Line 1: Ta = 50°C / Load = 100%
Line 2: Ta = 50°C / Load = 75% or Ta = 40°C / Load = 100%
Line 3: Ta = 50°C / Load = 50% or Ta = 35°C / Load = 100%

Set PWM mode via P11.41.
SVPWM = Space Vector Pulse Width Modulation mode
DPWM = Two Phase Pulse Width Modulation mode

460V Drive Variable Torque Carrier Frequency Derating

SVPWM Mode

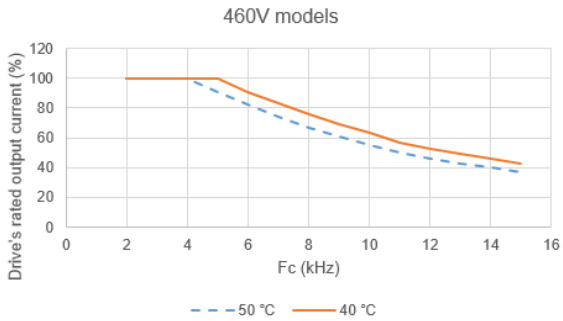

DPWM Mode

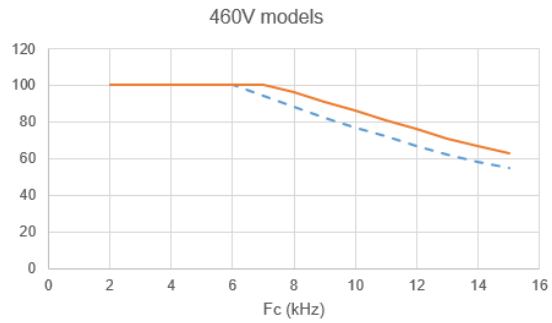

460V Drive Constant Torque Carrier Frequency Derating

SVPWM Mode

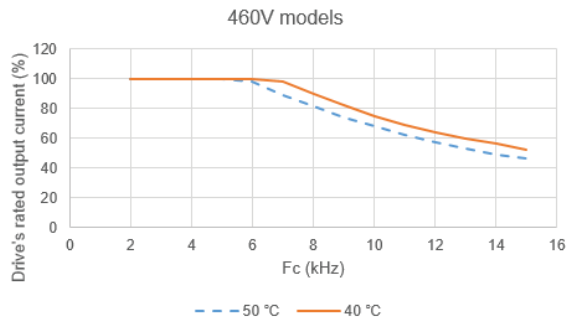

DPWM Mode

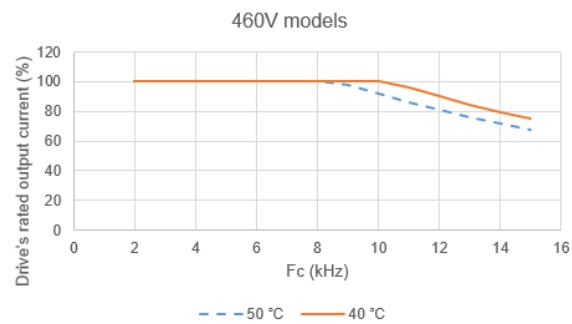

DURAPULSE GS30 AC Drives – Selection Specifications

GS30 Drive Model Selection Tables

GS30 230V[1] 1-Phase Specifications – Frame Sizes A, B, C							
Model Name				GS31-20P5	GS31-21P0	GS31-22P0	GS31-23P0
Price				$239.00	$251.00	$294.00	$321.00
Frame Size				A	B	C	C
Drawing				PDF	PDF	PDF	PDF
Output Rating	Max Motor Output		hp	1/2	1	2	3
			kW	0.4	0.75	1.5	2.2
	CT	Rated Output Capacity	kVA	1.1	1.9	2.9	4.2
		Rated Output Current	A	2.8	5.0	7.5	11
		Carrier Frequency[3]	kHz	2–15 (default 4)			
	VT	Rated Output Capacity	kVA	1.2	2.0	3.2	4.8
		Rated Output Current	A	3.2	5.2	8.5	12.5
		Carrier Frequency[3]	kHz	2–15 (default 4)			
Input Rating[2]	CT	Rated Input Current	A	7.3	11.2	16.5	24.2
	VT	Rated Input Current	A	8.3	11.7	18.5	27.5
	Rated Voltage/Frequency			One-phase 200-240 VAC (-15% to +10%) 50/60 Hz			
	Operating Voltage Range (VAC)			170–265			
	Frequency Tolerance (Hz)			47–63			
IE2 Efficiency - Relative Power Loss				3.5	2.8	2.7	2.5
SCCR Rating				100kA			
Weight (kg [lb])				0.76 [1.7]	0.81 [1.8]	1.05 [2.3]	1.24 [2.7]
Cooling Method				Convective		Fan	
IP Rating				IP20			
See table below for notes.							

GS30 230V[1] 3-Phase Specifications – Frame Sizes A, B, C								
Model Name				GS33-20P5	GS33-21P0	GS33-22P0	GS33-23P0	GS33-25P0
Price				$282.00	$291.00	$320.00	$334.00	$349.00
Frame Size				A	A	B	C	C
Drawing				PDF	PDF	PDF	PDF	PDF
Output Rating	Max Motor Output		hp	1/2	1	2	3	5
			kW	0.4	0.75	1.5	2.2	3.7
	CT	Rated Output Capacity	kVA	1.9	1.9	2.9	4.2	6.5
		Rated Output Current	A	5.0	5.0	7.5	11.0	17.0
		Carrier Frequency[3]	kHz	2–15 (default 4)				
	VT	Rated Output Capacity	kVA	1.2	2.0	3.0	4.8	7.4
		Rated Output Current	A	3.2	5.2	8.0	12.5	19.5
		Carrier Frequency[3]	kHz	2–15 (default 4)				
Input Rating[2]	CT	Rated Input Current	A	3.4	6.0	9.0	13.2	20.4
	VT	Rated Input Current	A	3.8	6.2	9.6	15.0	23.4
	Rated Voltage/Frequency			3-phase 200–240 VAC (-15% to +10%) 50/60 Hz				
	Operating Voltage Range (VAC)			170-265				
	Frequency Tolerance (Hz)			47-63				
IE2 Efficiency - Relative Power Loss				3.5	3.0	2.6	2.5	2.3
SCCR Rating				100kA				
Weight (kg [lb])				0.76 [1.7]	0.81 [1.8]	1.05 [2.3]	1.24 [2.7]	1.24 [2.7]
Cooling Method				Convective		Fan		
IP Rating				IP20				

1 - For Use With Three-Phase Motors Only.
2- If 3-phase power source is non-symmetrical, refer to "Circuit Connections – RFI Jumper" in the GS30 AC Drives User Manual, Chapter 2.
Please refer to "GS30 DURApulse Accessories – Fusing" (pg.tGSX-77) for input fusing information.
3 - The carrier frequency is a factory default. Decrease the current value if you need to increase the carrier frequency. Refer to "Derate Output Current Based on Carrier Frequency".

DURAPULSE GS30 AC Drives – Selection Specifications

GS30 Drive Model Selection Tables, *continued*

GS30 230V[1] 3-Phase Specifications – Frame Sizes D, E, F							
Model Name				GS33-27P5	GS33-2010	GS33-2015	GS33-2020
Price				$486.00	$597.00	$744.00	$999.00
Frame Size				D	E	E	F
Drawing				PDF	PDF	PDF	PDF
Output Rating	Max Motor Output		hp	7.5	10	15	20
			kW	5.5	7.5	11	15
	CT	Rated Output Capacity	kVA	9.5	12.6	18.7	24.8
		Rated Output Current	A	25.0	33.0	49.0	65.0
		Carrier Frequency[3]	kHz	2–15 (default 4)			
	VT	Rated Output Capacity	kVA	10.3	13.7	19.4	26.3
		Rated Output Current	A	27.0	36.0	51.0	69.0
		Carrier Frequency[3]	kHz	2–15 (default 4)			
Input Rating[2]	CT	Rated Input Current	A	30.0	39.6	58.8	78.0
	VT	Rated Input Current	A	32.4	43.2	61.2	82.8
	Rated Voltage/Frequency			3-phase 200–240 VAC (-15% to +10%) 50/60 Hz			
	Operating Voltage Range (VAC)			170-265			
	Frequency Tolerance (Hz)			47-63			
IE2 Efficiency - Relative Power Loss				2.4	2.4	2.3	2.1
SCCR Rating				100kA			
Weight (kg [lb])				2.07 [4.6]	3.97 [8.8]	3.97 [8.8]	6.30 [13.9]
Cooling Method				Fan			
IP Rating				IP20			
See table below for notes.							

GS30 230V[1] 3-Phase Specifications – Frame Sizes G, I							
Model Name				GS33-2025	GS33-2030	GS33-2040	GS33-2050
Price				$1,092.00	$1,256.00	$1,892.00	$2,159.00
Frame Size				G	G	I	I
Drawing				PDF	PDF	PDF	PDF
Output Rating	Max Motor Output		hp	25	30	40	50
			kW	18.5	22	30	37
	CT	Rated Output Capacity	kVA	28.9	34.4	46.9	57.8
		Rated Output Current	A	75	90	120	146
		Carrier Frequency[3]	kHz	2–15 (default 4)			
	VT	Rated Output Capacity	kVA	31.6	37.6	51.3	63.3
		Rated Output Current	A	81	102	134	160
		Carrier Frequency[3]	kHz	2–15 (default 4)			
Input Rating[2]	CT	Rated Input Current	A	77	92	117	143
	VT	Rated Input Current	A	85	103	126	161
	Rated Voltage/Frequency			3-phase 200–240 VAC (-15% to +10%) 50/60 Hz			
	Operating Voltage Range (VAC)			170-265			
	Frequency Tolerance (Hz)			47-63			
IE2 Efficiency - Relative Power Loss				2.3	2.4	2.3	2.3
SCCR Rating				5kA			10kA
Weight (kg [lb])				11.8 [26.0]	11.8 [26.0]	29.1 [64.2]	30.4 [67.0]
Cooling Method				Fan			
IP Rating				IP20			

1 - For Use With Three-Phase Motors Only.
2- If 3-phase power source is non-symmetrical, refer to "Circuit Connections – RFI Jumper" in the GS30 AC Drives User Manual, Chapter 2.
Please refer to "GS30 DURApulse Accessories – Fusing" (pg.tGSX-77) for input fusing information.
3 - The carrier frequency is a factory default. Decrease the current value if you need to increase the carrier frequency. Refer to "Derate Output Current Based on Carrier Frequency".

DURAPULSE GS30 AC Drives – Selection Specifications

GS30 Drive Model Selection Tables, *continued*

GS30 460V[1] 3-Phase Specifications – Frame Sizes A, B, C								
Model Name				GS33-40P5	GS33-41P0	GS33-42P0	GS33-43P0	GS33-45P0
Price				$282.00	$292.00	$302.00	$345.00	$363.00
Frame Size				A	A	B	C	C
Drawing				PDF	PDF	PDF	PDF	PDF
Output Rating	**Max Motor Output**		**hp**	1/2	1	2	3	5
			kW	0.4	0.75	1.5	2.2	3.7
	CT	**Rated Output Capacity**	**kVA**	1.1	2.3	3.2	4.3	6.9
		Rated Output Current	**A**	1.5	3.0	4.2	5.7	9.0
		Carrier Frequency[3]	**kHz**	2–15 (default 4)				
	VT	**Rated Output Capacity**	**kVA**	1.4	2.5	3.5	5.0	8.0
		Rated Output Current	**A**	1.8	3.3	4.6	6.5	10.5
		Carrier Frequency[3]	**kHz**	2–15 (default 4)				
Input Rating[2]	**CT**	**Rated Input Current**	**A**	2.1	4.2	5.8	6.1	9.9
	VT	**Rated Input Current**	**A**	2.5	4.6	6.4	7.2	11.6
	Rated Voltage/Frequency			3-phase 380–480 VAC (-15% to +10%) 50/60 Hz				
	Operating Voltage Range (VAC)			323-528				
	Frequency Tolerance (Hz)			47-63				
IE2 Efficiency - Relative Power Loss				4.4	2.8	2.4	2.3	3.1
SCCR Rating				100kA				
Weight (kg [lb])				0.76 [1.7]	0.77 [1.7]	1.05 [2.3]	1.24 [2.7]	1.24 [2.7]
Cooling Method				Convective		Fan		
IP Rating				IP20				
See table below for notes.								

GS30 230V[1] 3-Phase Specifications – Frame Sizes D, E, F									
Model Name				GS33-47P5	GS33-4010	GS33-4015	GS33-4020	GS33-4025	GS33-4030
Price				$489.00	$629.00	$790.00	$979.00	$1,151.00	$1,303.00
Frame Size				D	D	E	E	F	F
Drawing				PDF	PDF	PDF	PDF	PDF	PDF
Output Rating	**Max Motor Output**		**hp**	7.5	10	15	20	25	30
			kW	5.5	.75	11	15	18.5	22
	CT	**Rated Output Capacity**	**kVA**	9.9	13.3	19.1	24.4	29	34.3
		Rated Output Current	**A**	13.0	17.5	25.0	32.0	38.0	45.0
		Carrier Frequency[3]	**kHz**	2–15 (default 4)					
	VT	**Rated Output Capacity**	**kVA**	11.1	15.1	21.3	27.4	31.6	37.3
		Rated Output Current	**A**	14.5	19.8	28.0	36.0	41.5	49.0
		Carrier Frequency[3]	**kHz**	2–15 (default 4)					
Input Rating[2]	**CT**	**Rated Input Current**	**A**	14.3	19.3	27.5	35.2	41.8	49.5
	VT	**Rated Input Current**	**A**	16.0	21.8	30.8	39.6	45.7	53.9
	Rated Voltage/Frequency			3-phase 380–480 VAC (-15% to +10%) 50/60 Hz					
	Operating Voltage Range (VAC)			323-528					
	Frequency Tolerance (Hz)			47-63					
IE2 Efficiency - Relative Power Loss				2.0	1.9	1.7	1.6	1.5	1.4
SCCR Rating				100kA					
Weight (kg [lb])				2.07 [4.6]	2.07 [4.6]	3.97 [8.8]	3.97 [8.8]	6.30 [13.9]	6.30 [13.9]
Cooling Method				Fan					
IP Rating				IP20					

1 - For Use With Three-Phase Motors Only.
2- If 3-phase power source is non-symmetrical, refer to "Circuit Connections – RFI Jumper" in the GS30 AC Drives User Manual, Chapter 2.
Please refer to "GS30 DURApulse Accessories – Fusing" (pg.tGSX-77) for input fusing information.
3 - The carrier frequency is a factory default. Decrease the current value if you need to increase the carrier frequency. Refer to "Derate Output Current Based on Carrier Frequency".

DURAPULSE GS30 AC Drives – Selection Specifications

GS30 Drive Model Selection Tables, *continued*

GS30 460V[1] 3-Phase Specifications – Frame Sizes G, H, I								
Model Name				GS33-4040	GS33-4050	GS33-4060	GS33-4075	GS33-4100
Price				$1,673.00	$2,020.00	$2,306.00	$2,560.00	$2,978.00
Frame Size				G	H	H	I	I
Drawing				PDF	PDF	PDF	PDF	PDF
Output Rating	**Max Motor Output**		**hp**	40	50	60	75	100
			kW	30	37	45	55	75
	CT	**Rated Output Capacity**	**kVA**	46.9	57.8	70.3	85.9	117.2
		Rated Output Current	**A**	60	75	91	112	150
		Carrier Frequency[3]	**kHz**	2–15 (default 4)				
	VT	**Rated Output Capacity**	**kVA**	51.3	63.3	76.9	94	128.2
		Rated Output Current	**A**	69	85	108	128	180
		Carrier Frequency[3]	**kHz**	2–15 (default 4)				
Input Rating[2]	**CT**	**Rated Input Current**	**A**	63	66	80	110	147
	VT	**Rated Input Current**	**A**	72.5	77	97	123	173
	Rated Voltage/Frequency			3-phase 380–480 VAC (-15% to +10%) 50/60 Hz				
	Operating Voltage Range (VAC)			323-528				
	Frequency Tolerance (Hz)			47-63				
IE2 Efficiency - Relative Power Loss				1.4	2.0	1.8	1.7	1.7
SCCR Rating				5kA		10kA		
Weight (kg [lb])				11.7 [25.8]	25.1 [55.3]	28.6 [63.1]	32.6 [71.9]	36 [79.4]
Cooling Method				Fan				
IP Rating				IP20				

1 - For Use With Three-Phase Motors Only.
2- If 3-phase power source is non-symmetrical, refer to "Circuit Connections – RFI Jumper" in the GS30 AC Drives User Manual, Chapter 2.
Please refer to "GS30 DURApulse Accessories – Fusing" (pg.tGSX-77) for input fusing information.
3 - The carrier frequency is a factory default. Decrease the current value if you need to increase the carrier frequency. Refer to "Derate Output Current Based on Carrier Frequency".

DURAPULSE GS30 AC Drives – General Specifications

GS30 Drive Model Selection Tables, *continued*

GS30 General Specifications (Applicable to All Models)		
Control Characteristics	**Control Method**	See GS30 Motor Control table (below)
	Applicable Motor	IM (Induction Motor), PM motor control (IPM and SPM)
	Speed Control Range[1]	See GS30 Motor Control table (below)
	Torque Limits	VT: 160% of output current, max CT: 180% of output current, max
	Max. Output Frequency	0.00–599.00 Hz
	Overload Capacity	VT: rated output current of 120% 60 sec. every 5 minutes, 150% 3 sec. every 30 seconds CT: rated output current of 150% 60 sec. every 5 minutes, 200% 3 sec. every 30 seconds
	Frequency Setting Signal	0–10 V / -10–10 V 4–20 mA / 0–10 V 1 channel pulse input (33kHz), 1 channel pulse output (33kHz)
	Digital Inputs	Seven (7) - 24VDC NPN or PNP, includes 1 frequency input 33kHz
	Digital Outputs	Three (3) - (2)-48VDC, (1) Relay-250VAC/30VDC
	Analog Inputs	Two (2) - (1) voltage, (1) selectable Voltage or Current
	Analog Outputs	One (1) - selectable voltage or current
	Frequency Output	One (1) - 30VDC, 33kHz
	Safe Torque Off	STO1 and STO2 inputs- 24VDC
	Main Functions	Multiple motor switching (a maximum of four independent motor parameter settings), Fast start-up, Deceleration Energy Back (DEB) function, Wobble frequency function, Fast deceleration function, Master and Auxiliary frequency source selectable, Restart after momentary power loss, Speed tracking, Over-torque detection, Torque limit, 16-step speed (including the master speed), Accel./decel. time switch, S-curve accel./decel., three-wire operation control, JOG frequency, Frequency upper/lower limit settings, DC brake at start-up and stop, PID control, Built-in PLC (5000 steps), Tension control function, Built-in RS-485 (Modbus).
	Application Macro	Built-in application parameter groups (pump, fan, etc.) and user-defined application parameter groups. Tension Control Parameter Group.
Protection Characteristics	**Motor Protection**	Over-current, over-voltage, over-heating, phase loss, over-load.
	Stall Prevention	Stall prevention during acceleration, deceleration, and running (independent settings).
Option Cards	**Communication**	GS30A-CM-EIP1, GS30A-CM-EIP2, GS30A-CM-ECAT, GS30A-CM-EIPKITP2
	Encoder	GS30A-FB-LD, GS30A-FB-OC
	Extension I/O	GS30A-06CDD, GS30A-2AD2DA, GS30A-02TRC, GS30A-03TRA
	24V Power	GS30-BPS
Agency Approvals		*UL, CE[2], TÜV (SIL 2), RoHS, REACH*

1: Control accuracy may vary depending on the environment, application conditions, or different motors. For more information, contact AutomationDirect.
2: See CE declaration here: https://support.automationdirect.com/docs/GS30A-CE-2024.pdf

GS30 Motor Control (Applicable to All Models)					
Motor Control	**Motor Type**	**Control Mode**		**Start Torque**	**Speed Control Range (Turndown/Accuracy)**
		Description	**Symbol**		
	Induction Motor (IM)	Volts/Hz	IMVF	150% @ 3Hz	1:50
		Volts/Hz+encoder	IMVFPG		
		Sensorless vector	IMSVC		
		Field oriented control sensorless	IMFOC	200% @ 0.5 Hz	1:100
		Torque sensorless	IMTQC		±15%
		Field oriented control+encoder	IMFOCPG	200% @ 0Hz	1:1000
		Torque+encoder	IMTQCPG		±5%
	Permanent Magnet AC Motor (PM)	Sensorless vector	PMSVC	100% @ 1/20th motor frequency	1:20
		Field oriented control sensorless	PMSVC or IPM	150% @ 0Hz	1:100
		Field oriented control+encoder	PMFOCPG	200% @ 0Hz	1:1000
		Torque+encoder	PMTQCPG		±5%

DURAPULSE GS30 AC Drives – Environmental Specifications

GS30 Environmental Specifications

Environmental Conditions for GS30 AC Drives			
Condition	Operation	Storage	Transportation
Installation Location	IEC 60364-1/ IEC 60664-1 Pollution degree 2, Indoor use only.	n/a	n/a
Ambient Temperature	IP20/UL Open Type: -20 to 50°C (-20 to 60°C w/derating) [-4 to 122°F (-4 to 140°F w/derating)]	-40 to 85°C [-40 to 185°F]	-20 to 70°C [-4 to 158°F]
	Non-condensing, non-freezing		
Relative Humidity	90%, no water condensation	95%, no water condensation	
Air Pressure	86–106 kPa	70–106 kPA	
Pollution Level	IEC 60721-3, concentrate prohibited		
	Class 3C2; Class 3S2	Class 2C2; Class 2S2	Class 1C2; Class 1S2
Environmental Air	No corrosive/inflammable gases permitted		
Altitude	<1000 m (For altitudes > 1000 m, derate to use it.)		
Package Drop	n/a	ISTA procedure 1A (according to weight) IEC 60068-2-31	
Vibration	1.0 mm, peak to peak value range from 2–13.2 Hz; 0.7–2.0 G range from 13.2–55 Hz; 2.0 G range from 55–512 Hz. Compliance with IEC 60068-2-6	2.5 G peak, 5 Hz–2 kHz 0.015" maximum displacement	
Impact	15G, 11ms Compliance with IEC/EN60068-2-27	30G	
DO NOT expose the GS30 AC Drive to harsh environments such as dust, direct sunlight, corrosive/flammable gases, humidity, liquid, or vibrations. The salts in the air must be less than 0.01 mg/cm^2 every year.			

DURAPULSE GS30 AC Drives Specifications – Air Flow and Power (Heat) Dissipation

Minimum Clearances and Air Flow for GS30 Series Drives

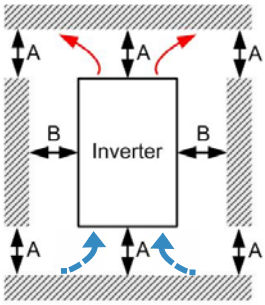

Single Drive Installation

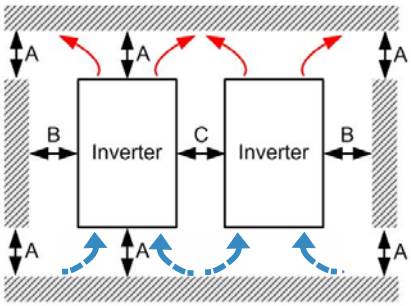

Side by Side Drive Installation

GS30 Minimum Mounting Clearances*

Installation Method	A (mm)	B (mm)	C (mm)	Operation Temperature (°C) Max (w/out derating)	Operation Temperature (°C) Max (Derating)
Single drive installation	50	30	–	50	60
Side-by-side horizontal installation	50	30	30	50	60
Zero stack installation	50	30	0	40	50

** Failure to follow the minimum mounting clearances may cause the fan to malfunction and cause a heat dissipation problem.*

GS30 Airflow and Power Dissipation

Model Number	Frame Size	Airflow Rate for Cooling: Flow Rate (cfm)	Airflow Rate for Cooling: Flow Rate (m^3/hr)	Power Dissipation (Watts): Loss External (Heat sink)	Power Dissipation (Watts): Internal	Power Dissipation (Watts): Total
GS31-20P5	A	0.0 b	0.0	16.3	14.5	30.8
GS31-21P0	B	0.0 b	0.0	31.1	22.5	53.6
GS31-22P0	C	16.0 b	27.2	46.5	31.0	77.5
GS31-23P0	C	16.0 b	27.2	70.0	35.0	105.0
GS33-20P5	A	0.0 b	0.0	16.5	12.6	29.1
GS33-21P0	A	10.0 b	17.0	33.2	15.0	48.2
GS33-22P0	B	10.0 b	17.0	50.1	24.2	74.3
GS33-23P0	C	16.0 b	27.2	76.0	30.7	106.7
GS33-25P0	C	16.0 b	27.2	108.2	40.1	148.3
GS33-27P5	D	23.4 b	39.7	192.8	53.3	246.1
GS33-2010	E	53.7 b	91.2	244.5	79.6	324.1
GS33-2015	E	53.7 b	91.2	374.2	86.2	460.4
GS33-2020	F	67.9 b	115.2	492.0	198.2	690.3
GS33-2025	G	232.0 b	394.2	581.3	100.0	681.3
GS33-2030	G	266.0 b	451.9	732.5	107.0	839.5
GS33-2040	I	455.0 b	773.1	926.0	124.0	1050.0
GS33-2050	I	493.0 b	837.6	1144.9	132.0	1276.9
GS33-40P5	A	0.0 b	0.0	17.6	11.1	28.7
GS33-41P0	A	10.0 b	17.0	32.6	20.0	52.6
GS33-42P0	B	10.0 b	17.0	45.9	21.7	67.6
GS33-43P0	C	16.0 b	27.2	60.6	22.8	83.4
GS33-45P0	C	16.0 b	27.2	93.1	42.0	135.1
GS33-47P5	D	23.4 b	39.7	132.8	39.5	172.3
GS33-4010	D	23.4 b	39.7	164.7	55.8	220.5
GS33-4015	E	53.7 b	91.2	234.5	69.8	304.3
GS33-4020	E	53.7 b	91.2	319.8	74.3	394.1
GS33-4025	F	67.9 b	115.2	423.5	181.6	605.1
GS33-4030	F	67.9 b	115.2	501.1	200.3	701.4
GS33-4040	G	266.0 b	451.9	655.3	122.0	777.3
GS33-4050	H	322.0 b	547.1	896.8	135.0	1031.8
GS33-4060	H	322.0 b	547.1	1029.0	150.0	1179.0
GS33-4075	I	455.0 b	773.1	1219.9	165.0	1384.9
GS33-4100	I	493.0 b	837.6	1495.0	180.0	1675.0

- Published flow rates are the result of active cooling using factory installed fans.
- Flow rates of (0.0) are the result of passive cooling in drives without fans.
- The required airflow shown in the chart is for installing a single GS30 drive in a confined space.
- When installing multiple GS30 drives, the required air volume would be the required air volume for a single drive multiplied by the number of drives.
- When calculating power dissipation (Watt Loss), use the Total value. Heat dissipation shown in the chart is for installing a single GS30 drive in a confined space.
- When installing multiple drives, the volume of heat/power dissipation should be the heat/power dissipated by a single drive multiplied by the number of drives.
- Heat dissipation for each model is calculated by rated voltage, current and default carrier frequency.

DURAPULSE GS30 AC Drives Specifications – Terminals

Control Circuit Terminal Names and Definitions

Control Circuit Terminals		
Terminal Symbol	**Terminal Function**	**Description**
+24V	Digital control signal common (Source)	+24V ± 10% 100mA **Note:** When used in parallel, if the +24V terminal is used with a feedback sensor, unequal current may occur, and there will be a risk of failure.
FWD (DI1) REV (DI2) DI3 - DI7	Digital input 1–7 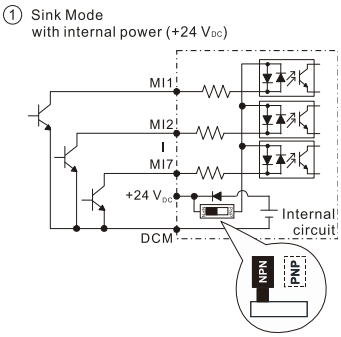 See pg. <?> for sinking/sourcing wiring examples.	**Source Mode:** ON: activation current 3.3 mA ≥ 11VDC OFF: cut-off voltage ≤ 5VDC **Sink Mode:** ON: activation current 3.3 mA ≤ 13VDC OFF: cut-off voltage ≥ 19VDC DI7: Single pulse input, maximum input frequency=33kHz. Digital inputs can be configured by the user for many different functions. Refer to P02.01–02.07 to program the digital inputs FWD (DI1), REV (DI2), DI3–DI7. When P02.00=0, FWD (DI1) and REV (DI2) can be programmed. • When P02.00≠0, the functions of FWD (DI1) and REV (DI2) act according to P02.00 setting. • When P02.07=0, DI7 is pulse input terminal. • DI7 uses pulse input can be used as frequency command source or connect it to the encoder for motor closed-loop control. • DI7 motor closed-loop control only supports VFPG control mode.
DO	Digital frequency signal output 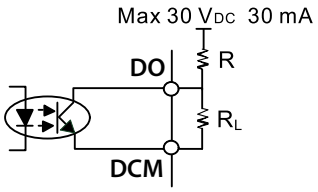 	DO uses pulse voltage as an output monitoring signal; Duty-cycle: 50% Min. load impedance RL: 1kΩ / 100pF Max. current endurance: 30 mA Max. voltage: 30VDC ± 1% (when 30VDC / 30mA / RL=100pF) Max. output frequency: 33kHz Current-limiting resistor R: ≥ 1KΩ Output load impedance RL Capacitive load ≤ 100pF Resistive load ≥ 1kΩ, resistance determines the output voltage value. DO-DCM voltage = external voltage * (RL/ (RL+R))
DCM	Digital control / Frequency signal common (Sink)	
DO1	Digital Output 1 (photo coupler)	The AC motor drive outputs various monitoring signals, such as drive in operation, frequency reached, and overload indication through a transistor (open collector). Outputs can be wired as sinking or sourcing. See User manual Appendix D for wiring examples. 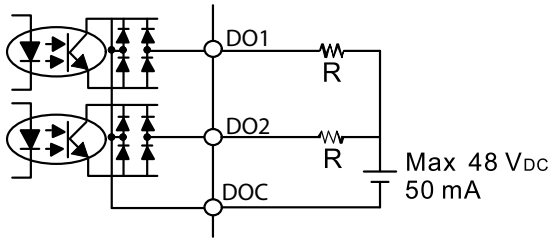
DO2	Digital Output 2 (photo coupler)	
DOC	Digital Output Common (photo coupler)	
R1O	Relay Output 1 (N.O.)	**Resistive Load** • 3.0 A (NO), 3.0 A (NC) @250VAC • 5.0 A (NO), 3.0 A (NC) @30VDC **Inductive Load (COS 0.4)** • 1.2 A (NO), 1.2 A (NC) @250VAC • 2.0 A (NO), 1.2 A (NC) @30VDC To output different kinds of monitoring signals such as motor drive in operation, frequency reached, and overload indication.
R1C	Relay Output 1 (N.C.)	
R1	Relay Output 1 Common	
+10V	Potentiometer power supply	Power supply for analog frequency setting: +10.5 ± 0.5 VDC / 20mA

DURAPULSE GS30 AC Drives Specifications – Terminals

Control Circuit Terminal Names and Definitions

Control Circuit Terminals (continued)		
Terminal Symbol	**Terminal Function**	**Description**
AI1	Analog voltage frequency command 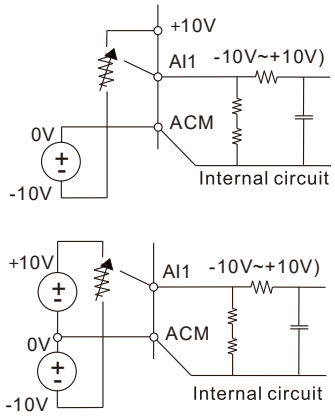 	Circuit Impedance: 20kΩ Potentiometer Rating: 5kΩ Range: 0–10 V / -10–10 V = 0–Maximum Operation Frequency (P01.00) Mode switching by setting P03.00, P03.28 AI1 resolution=10 bits
AI2	Analog current frequency command 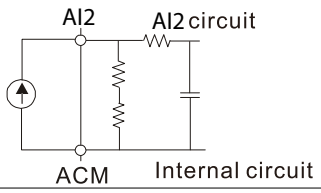 	Impedance: Current mode=250 Ω, Voltage mode=20kΩ Range: 0–20 mA / 4–20 mA / 0–10 V = 0–Maximum Operation Frequency (P01.00) Mode switching by setting P03.01, P03.29 Switch: The AI2 default is 0–20 mA / 4–20 mA (current mode) AI2 resolution = 12 bits
AO1	Multi-function analog voltage output 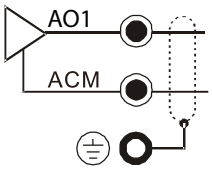 	Switch: The AO1 default is 0–10 V (voltage mode). To switch to the current mode, two steps are required: 1. A dip switch must be configured (follow the instructions on the inner side of the front cover. 2. Change P03.31 to 1 or 2 (see Chapter 4 of the GS20(X) User Manual). **Voltage mode** Range: 0–10 V (P03.31=0) corresponds to the maximum operating range of the control target Max. output current: 2mA Max. Load: 5kΩ **Current mode** Range: 0–20 mA (P03.31=1) / 4–20 mA (P03.31=2) corresponds to the maximum operating range of the control target, maximum load 500Ω AO1 resolution=10 bits
ACM	Analog Signal Common	Analog signal common terminal
STO1, STO2, SCM	Default: STO1 / STO2 short-circuited to +24V Rated voltage: 24VDC ± 10 %; maximum voltage: 30VDC ±10 % Rated current: 6.67 mA ± 10 % **STO activation mode** Input voltage level: 0VDC < STO1-SCM or STO2-SCM < 5VDC STO response time ≤ 20ms (STO1 / STO2 operates until the AC motor drive stops outputting current) **STO cut-off mode** Input voltage level: 11VDC < STO1-SCM and STO2-SCM < 30VDC Power removal safety function per EN 954-1 and IEC / EN 61508 **Note:** Refer to Appendix E of the GS30 User Manuals for details.	
SG+	Modbus RS-485 **Note:** Refer to GS30 User Manual Chapter 4 Descriptions of Parameter Settings, Parameter Group 09: Communication Parameters for details.	
SG-		
SGND*		
RJ45	PIN 1, 2, 6: Reserved	The RJ45 port provides a serial communications connection. Max Baud Rate = 115.2 kbps
	PIN 3, 7: SGND	
	PIN 4: SG-	
	PIN 5: SG+	
	PIN 8: +10V supply GS4-KPD (provides GS4-KPD power)	
USB	Type B	Port for connecting the drive to GSoft2 and GSLogic for parameter, PLC, and firmware updates.

**** The GS30 drive does not have a dedicated SGND terminal. To use RS-485, connect to the right-hand DCM terminal and use the DIP switch to set SGND function.***

DURAPULSE GS30 AC Drives – Basic Wiring Diagram

Main Circuit Wiring Diagram:

Note: Users MUST connect wiring according to the circuit diagram shown below. (Refer to GS30 User Manual for additional specific wiring information.)
Note: DC reactors (chokes) are specified but not stocked by AutomationDirect.

GS30 Frame Sizes A-G

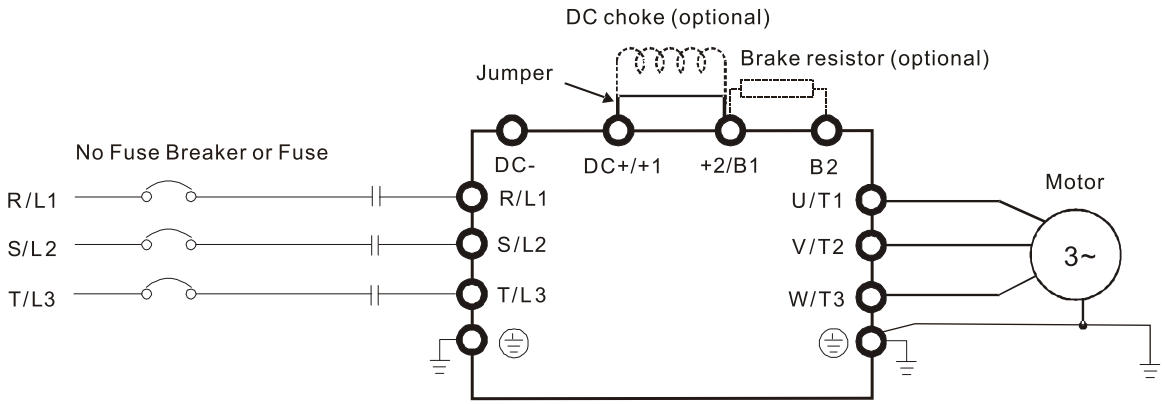

GS30 Frame Sizes H-I

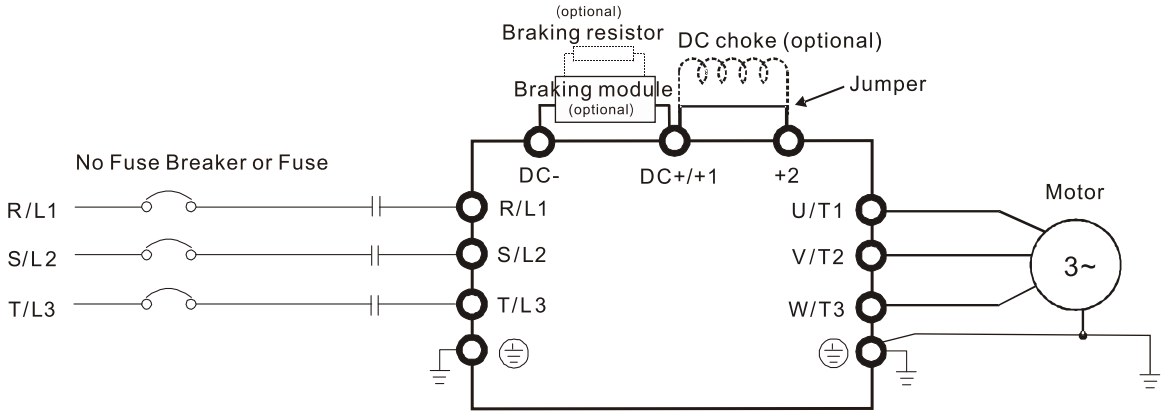

Note: For frame size H and I drives, braking resistor(s) must be connected to a dedicated braking module and cannot be connected directly to the DC-/DC+/+1 terminals.

*DURA*PULSE GS30 AC Drives – Basic Wiring Diagram

Control Circuit Wiring Diagram: Digital Inputs - Internal Power

Note: Users MUST connect wiring according to the circuit diagram shown below. (Refer to GS30 User Manual for additional specific wiring information.)

① Sink Mode
with internal power (+24 V_{DC})

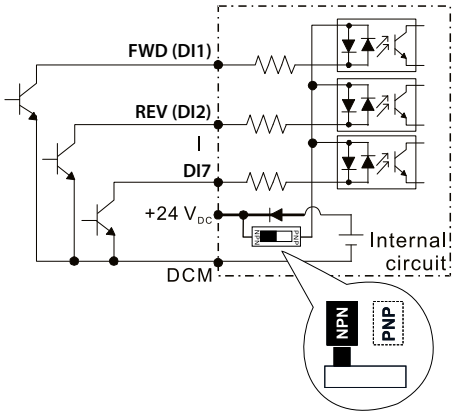

② Source Mode
with internal power (+24 V_{DC})

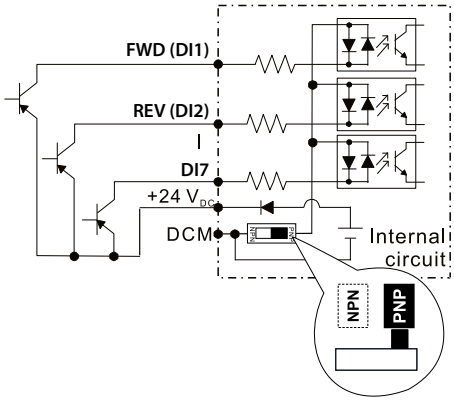

Control Circuit Wiring Diagram: Digital Inputs - External Power

Note: Users MUST connect wiring according to the circuit diagram shown below. (Refer to GS30 User Manual for additional specific wiring information.)

③ Sink Mode
with external power

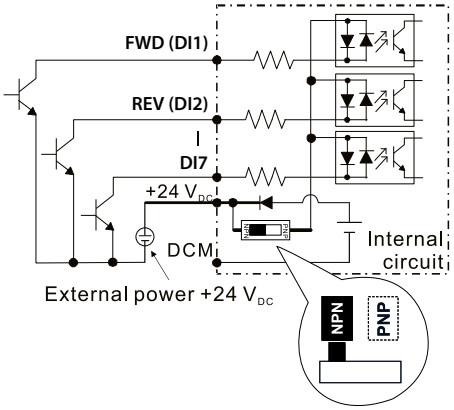

④ Source Mode
with external power

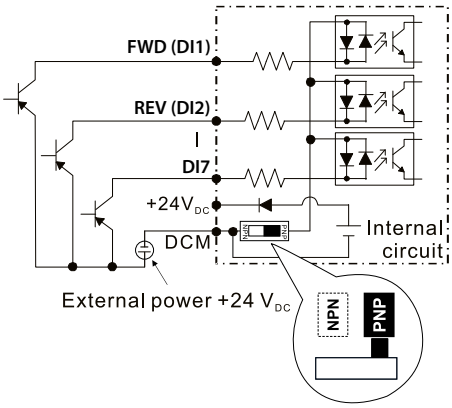

DURAPULSE GS30 AC Drives – Basic Wiring Diagram

System Wiring Diagram:

Note: Users MUST connect wiring according to the circuit diagram shown below. (Refer to user GS30 User Manual for additional specific wiring information.)

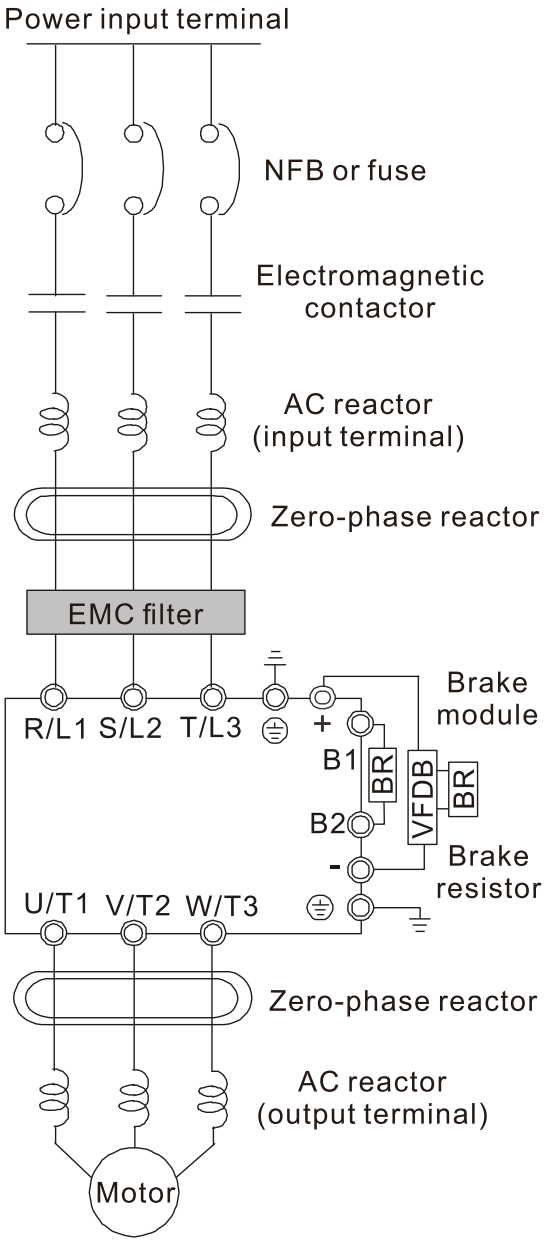

System Wiring Components	
Component	***Function***
Power input terminal	Supply power according to the rated power specifications indicated in the manual.
NFB or fuse	There may be a large inrush current during power on. Select a suitable NFB (Non Fuse Breaker or Circuit Breaker) or Fuse.
Electromagnetic contactor	Switching the power ON/OFF on the primary side of the electromagnetic contactor can turn the drive ON/OFF, but frequent switching can cause drive failure. Do not switch ON/OFF more than once an hour. Do not use the electromagnetic contactor as the power switch for the drive; doing so shortens the life of the drive.
AC reactor (input terminal)	When the main power supply capacity is greater than 500 kVA, or when it switches into a phase capacitor, the instantaneous peak voltage and current generated may destroy the internal circuit of the drive. It is recommended that you install an input side AC reactor in the drive. This also improves the power factor and reduces power harmonics. The wiring distance should be within 10 meters of the drive.
Zero-phase reactor	Used to reduce radiated interference, especially in environments with audio devices, and reduce input and output side interference. The effective range is AM band to 10 MHz.
EMC filter	Can be used to reduce electromagnetic interference.
Brake module and Brake resistor (BR)	Used to shorten the deceleration time of the motor.
AC Reactor/Output Filter (output terminal)	The motor cable length affects the size of the reflected wave on the motor end. For motor distances greater than 100 feet, the VTF series dV/dT filter is recommended.

DURAPULSE GS30 AC Drives – Basic Wiring Diagram

Control Wiring Diagram: Frame Size A-G Full I/O

Note: Users MUST connect wiring according to the circuit diagram shown below. (Refer to the GS30 User Manual for additional specific wiring information.)

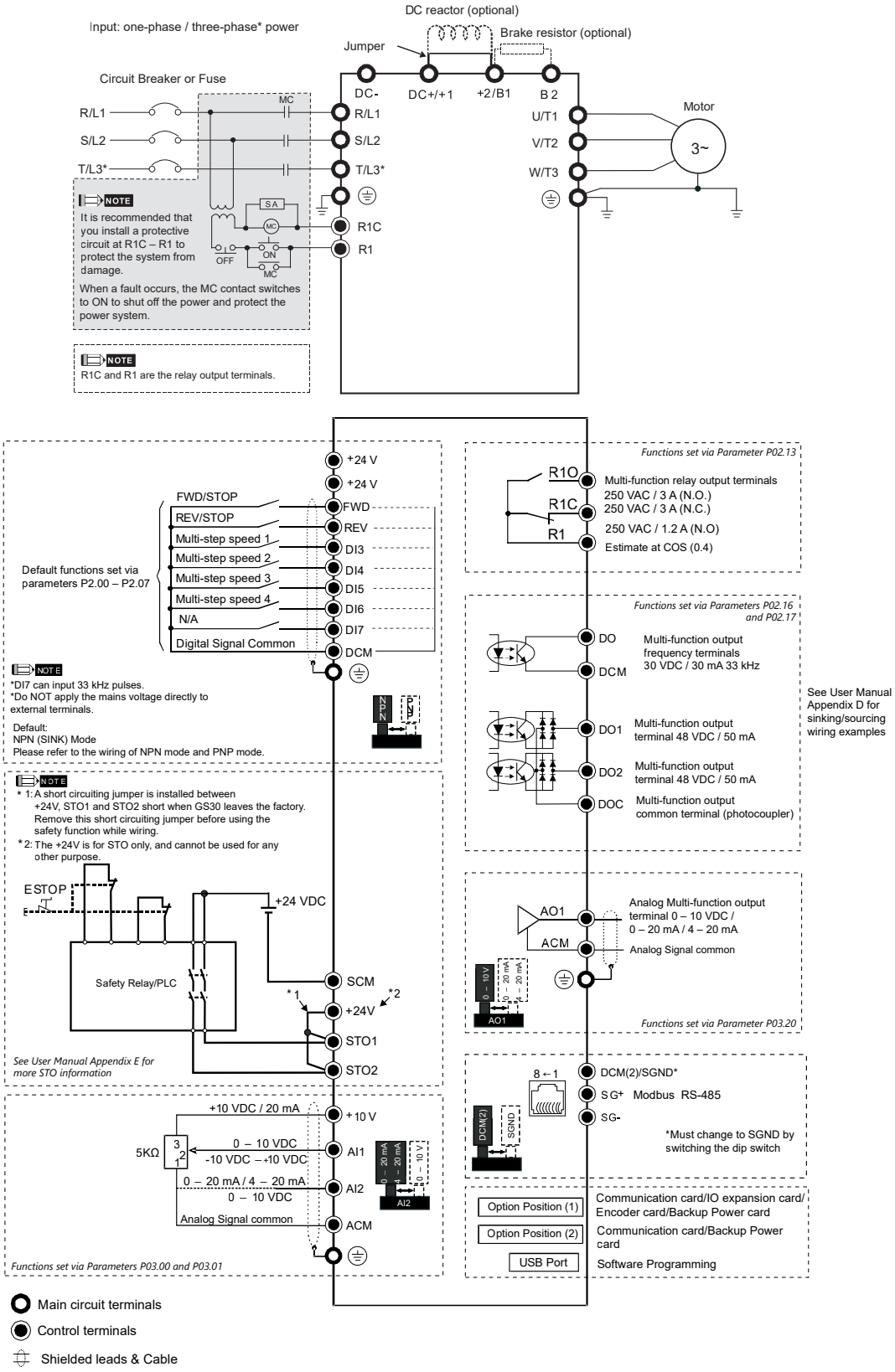

DURAPULSE GS30 AC Drives – Basic Wiring Diagram

Control Wiring Diagram: Frame Size H-I Full I/O

Note: Users MUST connect wiring according to the circuit diagram shown below. (Refer to the GS30 User Manual for additional specific wiring information.)

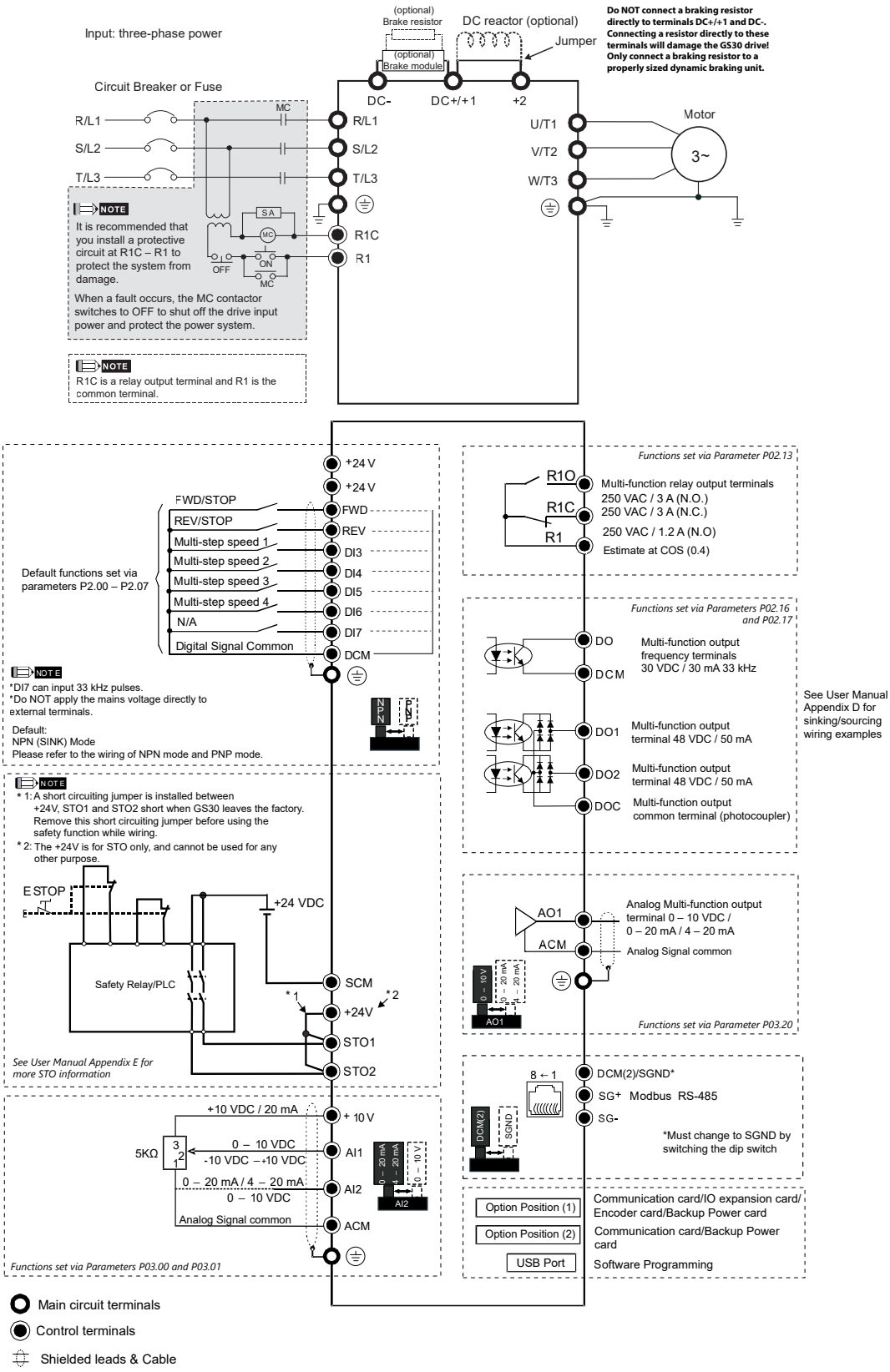

DURAPULSE GS30 AC Drives – Optional Accessories

Accessories Available for GS30 AC Drives

The table below lists types of accessories available for your GS30 series drive. GS30 uses many of the same accessories as the GS20(X) series drives–GS20 numbered parts that can be used with GS30 are noted in the table below. To see if your specific model can use a particular accessory, please click the reference link to go to the accessory page.

GS30 AC Drives Available Software and Accessories

Accessory	GS30 Accessory	GS20 Accessory used by GS30	Reference
GSoft 2 Drive Software	✓		"GSoft2 Drive Configuration Software" on page tGSX-103
GSLogic Software	✓		"GSLOGIC Drive Configuration Software" on page tGSX-104
Backup Power Supply	✓		"GS30A-BPS" on page tGSX-60
Braking Resistors	✓	✓	"GS4/GS30 DURApulse Drives Accessories – Dynamic Braking Component Selection – GS30" on page tGSX-149
Capacitive Filter		✓	"Capacitive Filter" on page tGSX-79
Communication Modules	✓		"GS30 Optional Modules" on page tGSX-60
Conduit Boxes	✓		"GS30 Conduit Boxes" on page tGSX-68
DIN Rail Mounting (A–C frame only)		✓	"DIN Rail Mounting" on page tGSX-85
EMC Filter	✓		"GS30 Standard Footprint EMC Filter and Zero-Phase Reactor" on page tGSX-72
EMC Shield Plates (A-F frame)		✓	"EMC Shield Plate" on page tGSX-79
EMC Shield Plates (G-I frame)	✓		
EMI Filters	✓		"GS30 High Performance EMI Input Filters" on page tGSX-74
Encoder and PLC Modules	✓		"GS30 Optional I/O Cards" on page tGSX-62
Fuses/Circuit Breakers	✓		"GS30 Fuses/Circuit Breakers" on page tGSX-77
Line/Load Reactor/Voltage Time Filter		✓	"GS30 Line Reactors/Voltage Time Filters" on page tGSX-84
Mounting Adapter Plate (A–C frame only)		✓	"Mounting Adapter Plate" on page tGSX-86
Communication Card Mounting Cover	✓		"GS30A-CM-EIPKITP2" on page tGSX-61
Optional Advanced Keypad		✓	"Advanced Keypad" on page tGSX-105
Replacement Key Pad	✓		"GS30 Replacement Keypad" on page tGSX-81
Replacement Fan Kit (A-F frame)		✓	"Cooling Fans for GSxx Series Drives (Spare/Replacement)" on page tGSX-87
Replacement Fan Kit (G-I frame)	✓		
RF Filter	✓		"RF Filter" on page tGSX-88

GS30 Optional Accessories – Expansion Cards

GS30 Optional Modules

The GS30A-CM-EIP1 and GS30A-CM-EIP2 are communication modules that can be used for either Modbus TCP or EtherNet/IP communication. The GS30A-CM-ECAT module is used for EtherCAT communications. The GS30A-BPS is a backup power supply option card that can maintain basic drive (not motor) functionality when external power is unavailable. Note that only one communication module can be installed at a time, but the BPS card can be installed with a communication card or any of the I/O cards. Please see the GS30 User Manual for additional information and installation instructions.

GS30 *DURA*PULSE Drives I/O and Communication Cards				
Part Number	***Price***	***Description***	***Features/Specifications***	***Position***
GS30A-CM-EIP1	$92.00	DURApulse GS30 series communication module, EtherNet/IP and Modbus TCP, 1 port, (1) Ethernet (RJ45) port(s). For use with GS30 series AC drives.	**Features:** • Supports Modbus TCP and EtherNet/IP protocol • 32/32 words read/write parameters correspondence • User-defined corresponding parameters • MDI/MDI-X auto-detect • IP filter simple firewall function **Specifications:** • RJ45 with Auto MDI/MDIX interface • 1 port (EIP1) or 2 ports (EIP2) • IEEE 802.3, IEEE 802.3u transmission method with Cat 5e shielding 100MHz cable at 10/100 Mbps Auto-detect transmission speed • Network protocol: ICMP, IP, TCP, UDP, DHCP, HTTP, SMTP, Modbus over TCP/IP, EtherNet/IP, BOOTP • Requires 15VDC provided by AC drive • 500VDC insulation voltage • 0.8 W power consumption • 25g (EIP1) or 30g (EIP2) weight	1 or 2
GS30A-CM-EIP2	$99.00	DURApulse GS30 series communication module, EtherNet/IP and Modbus TCP, 2 ports, (2) Ethernet (RJ45) port(s). For use with GS30 series AC drives.		
GS30A-CM-ECAT	$130.00	DURApulse GS30 series communication module, EtherCAT Slave, 2 ports, (2) Ethernet (RJ45) port(s). For use with GS30 series AC drives.	**Features:** • Enables EtherCAT communications • Supports speed mode • Supports reading and writing parameters • Supports stop during disconnection **Specifications:** • RJ45 interface • 2 ports • IEEE 802.3, IEEE 802.3u transmission method with Cat 5e shielding 100MHz cable at 100 Mbps transmission speed • Requires 15VDC provided by AC drive • 500VDC insulation voltage • 0.8 W power consumption • 27g weight	1 or 2
GS30A-BPS	$135.00	DURApulse GS30 series backup power supply module, for use with GS30 series AC drives.	Provides external power supply and supports 24VDC input. Supports parameter read/write and drive status monitoring. When providing backup power, the following functions work normally: • Parameter reading and writing • Keypad display • Keys on the keyboard panel (except the RUN key) • Analog input with +10V terminal supply power • Multi-function inputs with +24V terminal or external power supply • Relay output • Pulse sequence frequency command • Testing RS485 and Ethernet communications	1 or 2

GS30A-BPS

GS30A-CM-EIPx

GS30A-CM-ECAT

GS20/GS30 Optional Accessories – Expansion Cards

GS20/GS30 Optional Modules

The GS30A-CM-EIPKITP2 allows mounting of GS20 and GS30 series communication and expansion cards in Position 2 (on the outside of the drive) for Frames A - D. This gives the benefit of quick removal of the communication card for access to the main power and control terminals. It does add overall depth to the drive unit. The front cover of the kit must be removed to see the comm card status LEDs.

GS20/GS30 *DURA*PULSE Drives Communication Card Mounting				
Part Number	***Price***	***Description***	***Features/Specifications***	***Position***
GS30A-CM-EIPKITP2	$22.00	DURApulse GS30 mounting cover, for use with GS20 and GS30 series communication modules. Used when communication module is installed in position 2.	Mounting kit for mounting GS20/GS30 EtherNet/IP communication cards in Position 2 for frames A through D. Not needed for larger frames. GS30A-CM-ECAT comes with a mounting cover.	2

GS30A-CM-EIPKITP2

Drive with GS30A-CM-EIPKITP2 installed

GS30 Optional Accessories – I/O Cards

GS30 Optional I/O Cards

GS30 series drives support a variety of optional input/output cards that can be used to provide additional connection terminals or encoder support.

GS30 *DURA*PULSE Drives I/O Cards					
Part Number	***Price***	***Description***	***Terminals***	***Descriptions***	***Position***
GS30A-06CDD	$53.00	DURApulse GS30 series discrete combo module, Input: 3-point, 24 VDC, sinking/sourcing selectable, Output: 3-point, 48 VDC, sinking/sourcing selectable, 30 mA/point, 50 mA resistive output current. For use with GS30 series AC drives.	24V, DCM	Output power: +24VDC ±5% < 30mA	1
			DI10-DI12	• Choose SINK (NPN) / SOURCE (PNP) by SWW1 • Internal power is supplied by terminal 24V: +24VDC ±5% • If external power is +24VDC, the maximum voltage is 30VDC and the minimum voltage is 19VDC • ON: activation current is 6.5 mA • OFF: leakage current tolerance is 10µA	
			DO10-DO12	• The motor drive outputs various monitor signals, such as drive in operation, frequency reached and overload indication through the transistor (open collector) • DO output signal: each DO terminal needs a pull-up resistor, the maximum external power voltage is 48VDC / 50mA	
			DCM	Common for digital output terminals DO10–DO12 (photocoupler)	
			PE	Grounding terminals. To decrease noise, properly ground this terminal.	
GS30A-2AD2DA	$62.00	DURApulse GS30 series analog combo module, Input: 2-channel, current/voltage, 0-20 mA and 4-20 mA, 0-10 VDC, Output: 2-channel, current/voltage, 0-20 mA and 4-20 mA, 0-10 VDC.	ACM	Common output signal and input signal terminals	1
			AI10, AI11	Two sets of AI ports: SSW3, SSW4 switch for AI1, AI2 (default is AI1) • AI1: input 0–10 V • AI2: input 0–20 mA	
			AO10–AO11	Two sets of AO ports: SSW1, SSW2 switch for current (default) or voltage. • Voltage output: 0–10 V • Current output: 0–20 mA	
			PE	Grounding terminal. to decrease noise, properly ground this terminal.	
GS30A-02TRC	$59.00	DURApulse GS30 series relay output module, 2-point, 240 VAC/30 VDC, (2) Form C, 2 isolated common(s), 1 point(s) per common. Screw terminal blocks included.	10NO-10NC-10CM (DO10) 11NO-11NC-11CM (DO11)	Resistive load: 5A (N.O.) / 250VAC Function: outputs the monitor signals, such as drive in operation, frequency reached, or overload indication.	1
GS30A-03TRA	$63.00	DURApulse GS30 series relay output module, 3-point, 250 VAC/30 VDC, (3) Form A, 2 isolated common(s), 1 point(s) per common. Screw terminal blocks included.	10NO-10CM (DO10) 11NO -11CM (DO11) 12NO -12CM (DO12)	Resistive load: 6A (N.O.) / 250VAC Function: outputs the monitor signals, such as drive in operation, frequency reached, or overload indication.	1

GS30A-06CDD

GS30A-2AD2DA

GS30A-02TRC

GS30A-03TRA

GS30 Optional Accessories – I/O Cards

GS30 Optional I/O Cards, *continued*

GS30 *DURA*PULSE Drives I/O Cards						
Part Number	***Price***	***Description***	***Terminals***		***Descriptions***	***Position***
GS30A-FB-LD	$115.00	DURApulse GS30 series encoder module, line driver (differential) encoder input. For use with GS30 series AC drives. Supports 1-phase and 2-phase input and output.	PG1	VP	• Power output voltage: +5V ±5% or +12V ±5% • Maximum output current: 200mA (+5V)	1
				DCM	Common for power and signal	
				A1, $\overline{A1}$, B1, $\overline{B1}$, Z1, $\overline{Z1}$	• Encoder input signal (applicable for line driver or open collector • Open collector input voltage +5–24 VDC • Supports 1-phase and 2-phase input • Maximum input signal: 300kHz	
			PG2	A2, $\overline{A2}$, B2, $\overline{B2}$	• Pulse input signal (applicable for line driver or open collector) • Open collector input voltage +5–24 VDC • Supports 1-phase and 2-phase input • Maximum input signal: 300kHz	
			PG OUT	AO, $\overline{AO}$, BO, $\overline{BO}$, ZO, $\overline{ZO}$, SG	• Encoder feedback signal output, supports frequency elimination: 1–255 times • Maximum output voltage of the line driver: 5VDC • Maximum output current: 15mA • Maximum output frequency: 300kHz • SG, the referenced electric potential for encoder output signal, serves as the ground for host controller or PLC to make the output signal become the common point. Do not use common grounding with SG and DCM as it may influence the signal quality	
			Ground	PE	Grounding terminal. To decrease noise, properly ground this terminal.	
GS30A-FB-OC	$112.00	DURApulse GS30 series encoder module, NPN open collector and PNP open collector encoder input. For use with GS30 series AC drives. Supports 1-phase and 2-phase input and output.	PG1	VP	• Power output voltage: +5V ±5% or +12V ±5% (Use SSW320 to switch +5V or +12V, the default is +5V) • Maximum output current: 200mA (+5V)	1
				DCM	Common for power and signal	
				A1, $\overline{A1}$, B1, $\overline{B1}$, Z1, $\overline{Z1}$	• Encoder input signal (applicable for line driver or open collector • Open collector input voltage +5–24 VDC • Supports 1-phase and 2-phase input • Maximum input signal: 300kHz	
			PG2	A2, $\overline{A2}$ B2, $\overline{B2}$	• Pulse input signal (applicable for line driver or open collector) • Open collector input voltage +5–24 VDC • Supports 1-phase and 2-phase input • Maximum input signal: 300kHz	
			PG OUT	V+, V+	• Needs an external power source for the PG OUT circuit • Input voltage: +7–24 V	
				V-	The negative side for external power supply	
				$\overline{AO}$, $\overline{BO}$, $\overline{ZO}$	• PG feedback signal output: supports frequency elimination: 1–255 times • Open collector's output signal: add a pull-up resistor on each PG out external power • Maximum input frequency: 300kHz	

GS30A-FB-LD

GS30A-FB-OC

GS30 Series Optional Accessories – Conduit Boxes

GS30 – Conduit Selection Table

Drive		Conduit Box*			Description
Model	Frame	Part #	Price	Drawing	
GS31-20P5 GS33-20P5 GS33-21P0 GS33-40P5 GS33-41P0	A1, A2, A3	GS30A-N1A	$31.00	PDF	GS30 series conduit box, NEMA1
GS31-21P0 GS33-22P0 GS33-42P0	B1, B2	GS30A-N1B	$31.00	PDF	
GS31-22P0 GS33-23P0 GS33-25P0 GS33-43P0 GS33-45P0	C	GS30A-N1C	$32.00	PDF	
GS33-27P5 GS33-47P5 GS33-4010	D	GS30A-N1D	$33.00	PDF	
GS33-2010 GS33-2015 GS33-4015 GS33-4020	E	GS30A-N1E	$35.00	PDF	
GS33-2020 GS33-4025 GS33-4030	F	GS30A-N1F	$36.00	PDF	
GS33-2025 GS33-2030 GS33-4040	G	GS30A-N1G	$56.00	PDF	
GS33-4050 GS33-4060	H	GS30A-N1H	$59.00	PDF	
GS33-2040 GS33-2050 GS33-4075 GS33-4100	I	GS30A-N1I	$82.00	PDF	

** Conduit Box Kits include mounting hardware; box base, box cover, bushings, and screws. Conduit box dimensions are shown below and on the following page.*

GS30 Conduit Boxes

Optional Conduit Box Kits can be ordered separately. These kits bolt onto the bottom of the applicable GS30 drive to provide a convenient connection point for conduit entry, allowing the GS30 to achieve a NEMA 1/UL type 1 environmental protection rating; especially useful for GS30 drives mounted outside of an electrical control panel.

Example GS30 Conduit Box

GS30 Optional Accessories – EMC Filter & Zero-Phase Reactor

GS30 Standard Footprint EMC Filter and Zero-Phase Reactor

If electromagnetic noise is harmful to your manufacturing environment, we recommend that you select an EMC filter as shown below. For some drive models, you may need to use zero-phase reactors to be compliant with EMC regulations. Refer to the table and figures below for the recommended model, setting method, and maximum motor cable length of the EMC filter and zero-phase reactor. The filter's footprint allows mounting of the drive on top of the recommended filter, saving panel space and wiring. For more information and installation instructions, please see the GS30 User Manual.

GS30 EMC Filter and Zero-Phase Reactor, Frames A-F

Frame	Drive Model	Input Current (A)	Footprint* Filter Model #	Price	Recommended Zero-Phase Reactor	Conducted Emission				Radiated Emission		
						C1-motor cable length-30m			C2-motor cable length-100m	C2-motor cable length-100m		
						Zero-Phase Reactor Position						
						1	2	3	n/a	1	2	3
A	GS31-20P5	6.7	EMF11AM21A	$58.00	RF008X00A		✓	✓	N/A		✓	✓
	GS33-20P5	3.8	EMF10AM23A	$80.00			✓	✓			✓	✓
	GS33-21P0	6	EMF10AM23A	$80.00			✓	✓			✓	✓
	GS33-40P5	2.5	EMF6A0M43A	$73.00				✓				✓
	GS33-41P0	4.2	EMF6A0M43A	$73.00				✓				✓
B	GS31-21P0	10.5	EMF11AM21A	$58.00			✓	✓			✓	✓
	GS33-22P0	9.6	EMF10AM23A	$80.00			✓	✓			✓	✓
	GS33-42P0	6.4	EMF6A0M43A	$73.00				✓				✓
C	GS31-22P0	17.9	EMF27AM21B	$102.00				✓				✓
	GS31-23P0	26.3	EMF27AM21B	$102.00				✓				✓
	GS33-23P0	15	EMF24AM23B	$125.00			✓	✓			✓	✓
	GS33-25P0	23.4	EMF24AM23B	$125.00			✓	✓			✓	✓
	GS33-43P0	7.2	EMF12AM43B	$128.00								
	GS33-45P0	11.6	EMF12AM43B	$128.00			✓	✓			✓	✓
D	GS33-27P5	32.4	EMF33AM23B	$182.00		✓	✓			✓	✓	
	GS33-47P5	17.3	EMF23AM43B	$175.00		✓	✓	✓		✓	✓	✓
	GS33-4010	22.6	EMF23AM43B	$175.00		✓	✓	✓		✓	✓	✓
E	GS33-2010	43.2	B84143D0050R127	$783.00			✓	✓			✓	✓
	GS33-2015	61.2	B84143D0075R127	$879.00			✓	✓			✓	✓
	GS33-4015	30.8	B84143D0050R127	$783.00								
	GS33-4020	39.6	B84143D0050R127	$783.00			✓	✓			✓	✓
F	GS33-2020	82.8	B84143D0090R127	$967.00			✓	✓			✓	✓
	GS33-4025	45.7	B84143D0050R127	$783.00			✓	✓			✓	✓
	GS33-4030	53.9	B84143D0075R127	$879.00			✓	✓			✓	✓

Note: It is not necessary to add a zero-phase reactor to pass the C2 conducted emission test.
** The B8xxx series filters are not footprint filters and must be mounted separately.*

GS30 EMC Filter and Zero-Phase Reactor, Frames G-I

Frame	Drive Model	Input Current (A)	Filter Model #	Price	Recommended Zero-Phase Reactor	Conducted Emission									Radiated Emission		
						C1-motor cable length-10m			C2-motor cable length-20m			C3-motor cable length 100m			C2-motor cable length-100m		
						Zero-Phase Reactor Position											
						1	2	3	1	2	3	1	2	3	1	2	3
G	GS33-2025	85	B84143A0120R105	$765.00	RF008X00A		✓	✓			✓					✓	✓
	GS33-2030	103	B84143A0120R105	$765.00			✓	✓			✓					✓	✓
	GS33-4040	72.5	B84143A0120R105	$765.00		✓		✓			✓						
H	GS33-4050	77	B84143D0150R127	$1,162.00	RF002X00A	✓		✓			✓					✓	✓
	GS33-4060	97	B84143D0150R127	$1,162.00		✓		✓			✓					✓	✓
I	GS33-2040	126	B84143D0200R127	$1,722.00		✓	✓	✓								✓	✓
	GS33-2050	151	B84143D0200R127	$1,722.00		✓	✓									✓	✓
	GS33-4075	123	B84143D0200R127	$1,722.00			✓										
	GS33-4100	173	B84143D0200R127	$1,722.00			✓										

Note: It is not necessary to add a zero-phase reactor to pass the C2 conducted emission test.

GS30 Series Optional Accessories – EMI Input Filters

GS30 High Performance EMI Input Filters

High performance EMI filters may improve drive performance for certain applications. Use the table below to select the correct filter for your drive. For additional information and installation instructions, please see your GS30 series User Manual.

EMI Filters Selection

Model	Description	EMI Filter*	
GS30 Drives		Roxburgh Filters Chassis 1ph	Roxburgh Filters C2 Rated
GS31-20P5	230V 1ph 0.5 hp	RES90F10	MIF10
GS31-21P0	230V 1ph 1.0 hp	RES90F16	MIF16
GS31-22P0	230V 1ph 2.0 hp	RES90S20	MIF23
GS31-23P0	230V 1ph 3.0 hp	RES90S30	MIF330B
GS33-20P5	230V 3ph 0.5 hp	-	KMF306A
GS33-21P0	230V 3ph 1.0 hp	-	KMF306A
GS33-22P0	230V 3ph 2.0 hp	-	KMF318A
GS33-23P0	230V 3ph 3.0 hp	-	KMF318A
GS33-25P0	230V 3ph 5.0 hp	-	KMF325A
GS33-27P5	230V 3ph 7.5 hp	-	KMF336A
GS33-2010	230V 3ph 10hp	-	KMF350A
GS33-2015	230V 3ph 15hp	-	KMF370A
GS33-2020	230V 3ph 20hp	-	KMF3100A
GS33-2025	230V 3ph 25hp	-	KMF3100A
GS33-2030	230V 3ph 30hp	-	KMF3100A
GS33-2040	230V 3ph 40hp	-	MIF3150
GS33-2050	230V 3ph 50hp	-	MIF3150
GS33-40P5	460V 3ph 0.5 hp	-	KMF306A
GS33-41P0	460V 3ph 1.0 hp	-	KMF306A
GS33-42P0	460V 3ph 2.0 hp	-	KMF306A
GS33-43P0	460V 3ph 3.0 hp	-	KMF310A
GS33-45P0	460V 3ph 5.0 hp	-	KMF318A
GS33-47P5	460V 3ph 7.5 hp	-	KMF318A
GS33-4010	460V 3ph 10hp	-	KMF325A
GS33-4015	460V 3ph 15hp	-	KMF336A
GS33-4020	460V 3ph 20hp	-	KMF350A
GS33-4025	460V 3ph 25hp	-	KMF350A
GS33-4030	460V 3ph 30hp	-	KMF370A
GS33-4040	460V 3ph 40hp	-	KMF370A
GS33-4050	460V 3ph 50hp	-	KMF370A
GS33-4060	460V 3ph 60hp	-	KMF3100A
GS33-4075	460V 3ph 75hp	-	MIF3150
GS33-4100	460V 3ph 100hp	-	MIF3150

** All specs for the EMI filters can be found at www.automationdirect.com or by clicking the following links: -KMF Series Filters, -MIF Series Filters, -RES90 Series Filters*

GS30 Series Optional Accessories – Fuses/Circuit Breakers

GS30 Fuses/Circuit Breakers

Protection devices are essential to prevent damage to your GS30 series drive and application equipment. Please use the fuse specification chart below to select fuses that are applicable to your drive. Only use UL-certified fuses which comply with your local regulations.

Fuse Specification Chart GS30 *DURAPULSE* Drives

Drive Model	HP	Input Power			Input Fuse			Circuit Breaker	
		Ø	Volts	GS30 Input Amps	Fuse Amps	Fast Acting Class T	Edison Class J*	Size	Note
GS31-20P5	1/2	1	230	8.3	15	TJN15	JHL15	20	GCB100S-3FF20LL
GS31-21P0	1			11.3	20	TJN20	JHL20	30	GCB100S-3FF30LL
GS31-22P0	2			18.5	35	TJN35	JHL35	45	GCB100S-3FF40LL
GS31-23P0	3			27.5	50	TJN50	JHL50	70	GCB100S-3FF70LL
GS33-20P5	1/2	3		3.8	15	TJN15	JHL15	15	GCB100S-3FF15LL
GS33-21P0	1			6	20	TJN20	JHL20	16	GCB100S-3FF15LL
GS33-22P0	2			9.6	35	TJN35	JHL35	25	GCB100S-3FF25LL
GS33-23P0	3			15	50	TJN50	JHL50	40	GCB100S-3FF40LL
GS33-25P0	5			23.4	80	TJN80	JHL80	60	GCB100S-3FF60LL
GS33-27P5	7 1/2			32.4	60	TJN60	JHL60	63	GCB100S-3FF60LL
GS33-2010	10			43.2	80	TJN80	JHL80	90	GCB100S-3FF90LL
GS33-2015	15			61.2	110	TJN110	JHL110	125	GCB150S-3FF125LL
GS33-2020	20			82.8	150	TJN150	JHL150	160	BW250JAGU-3P160SB
GS33-2025	25			85.0	170	TJN175	JHL175	175	GCB250S-3FF175LL
GS33-2030	30			103.0	206	TJN200	JHL200	200	GCB250S-3FF200LL
GS33-2040	40			126.0	252	TJN250	JHL250	225	GCB250S-3FF225LL
GS33-2050	50			151.0	302	TJN300	JHL300	300	GCB400S-3FF300LL
GS33-40P5	1/2		460	2	10	TJS10	JHL10	15	GCB100S-3FF15LL
GS33-41P0	1			3.3	15	TJS15	JHL15	15	GCB100S-3FF15LL
GS33-42P0	2			5.1	20	TJS20	JHL20	15	GCB100S-3FF15LL
GS33-43P0	3			7.2	25	TJS25	JHL25	20	GCB100S-3FF20LL
GS33-45P0	5			11.6	45	TJS45	JHL45	30	GCB100S-3FF30LL
GS33-47P5	7 1/2			17.3	35	TJS35	JHL35	32	GCB100S-3FF30LL
GS33-4010	10			22.6	45	TJS45	JHL45	45	GCB100S-3FF40LL
GS33-4015	15			30.8	60	TJS60	JHL60	60	GCB100S-3FF60LL
GS33-4020	20			39.6	80	TJS80	JHL80	80	GCB100S-3FF80LL
GS33-4025	25			45.7	90	TJS90	JHL90	90	GCB100S-3FF90LL
GS33-4030	30			53.9	110	TJS110	JHL110	100	GCB100S-3FF100LL
GS33-4040	40			72.5	150	TJN150	JHL150	125	GCB150S-3FF125LL
GS33-4050	50			77.0	160	TJN175	JHL175	150	GCB150S-3FF150LL
GS33-4060	60			97.0	200	TJN200	JHL200	175	GCB250S-3FF175LL
GS33-4075	75			123.0	250	TJN250	JHL250	225	GCB250S-3FF225LL
GS33-4100	100			173.0	350	TJN300	JHL350	300	GCB400S-3FF300LL

** High-speed Class J.*

Note: JHL fuses can be used with GS and DURAPULSE drives in non-UL applications. Fuse the drive according to NEC guidelines (NEC Article 430). For UL applications, GS, and DURAPULSE drives require Class T fuses (refer to the drive's user manual for details).

*Dura*Pulse Optional Accessories – General

EMC Shield Plate

EMC Shield Plates are available for use with shielded cable and your GS10/GS20/GS30 drive. For GS20X drives, please use Earthing Plates. Each shield plate is compatible with all GS10, GS20, and GS30 drives of that frame size. For more information and installation instructions, see your GSxx series User Manual.

EMC Shield Plate Selection

Drive Series	Frame	EMC Shield Plate Model	Price
GS10/20/30	A	GS20A-ESP-A	$28.00
GS10/20/30	B	GS20A-ESP-B	$29.00
GS10/20/30	C	GS20A-ESP-C	$29.00
GS10/20/30	D	GS20A-ESP-D	$31.00
GS20/30	E	GS20A-ESP-E	$43.00
GS20/30	F	GS20A-ESP-F	$43.00
GS30	G	GS30A-ESP-G	$47.00
GS30	H	GS30A-ESP-H	$50.00
GS30	I	GS30A-ESP-I	$54.00

EMC Shield Plate Dimensions

Model	Dimensions mm [inch]	
	a	b
GS20A-ESP-A	69.3 [2.73]	80.0 [3.15]
GS20A-ESP-B	67.7 [2.67]	79.7 [3.14]
GS20A-ESP-C	78.0 [3.07]	91.0 [3.58]
GS20A-ESP-D	103.4 [4.07]	97.0 [3.82]
GS20A-ESP-E	124.3 [4.89]	77.4 [3.05]
GS20A-ESP-F	168.0 [6.61]	80.0 [3.15]
GS30A-ESP-G	243.5 [9.59]	154.9 [6.10]
GS30A-ESP-H	262.0 [10.31]	201.9 [7.95]
GS30A-ESP-I	304.0 [11.97]	260.7 [10.26]

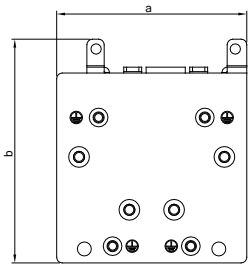

Capacitive Filter

The GS20A-CAPF capacitive filter supports basic filtering and noise interference reduction for all GS10, GS20(X), and G30 models, 460V and below. For more information and installation instructions, please see your GSxx series User Manual.

The GS20A-CAPF cannot be used with 575V models.

Capacitive Filter

Drive Series	Model	Price	Applicable Voltage	Temperature Range	Capacitance
GS10/ GS20(X)/ GS30	GS20A-CAPF	$24.00	110–480 VAC	-40–85°C	Cx: 1uF ± 20% Cy: 0.1uF ± 20%

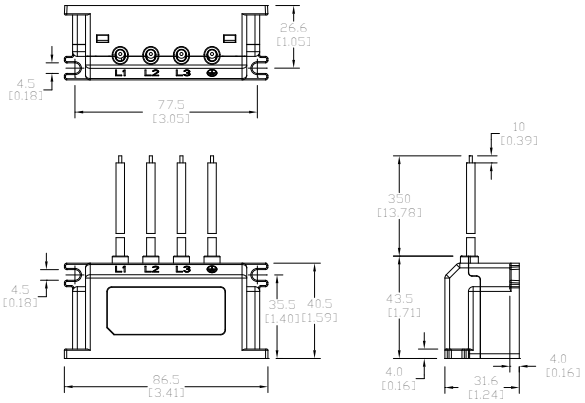

GS30 Optional Accessories – Keypad

GS30 Replacement Keypad

The GS30A-KPD can be used to replace the keypad that comes with each GS30 drive. The replacement keypad can be plugged directly into the drive (no screws needed) or mounted remotely using M3 screws and a standard Cat5E ethernet cable.

GS3A-KPD Replacement Keypad			
Part	***Price***	***Screw***	***Torque***
GS30A-KPD	$63.00	M3	8–9 kg·cm (6.947.81 lb-in.) [0.78–0.88 N·m]

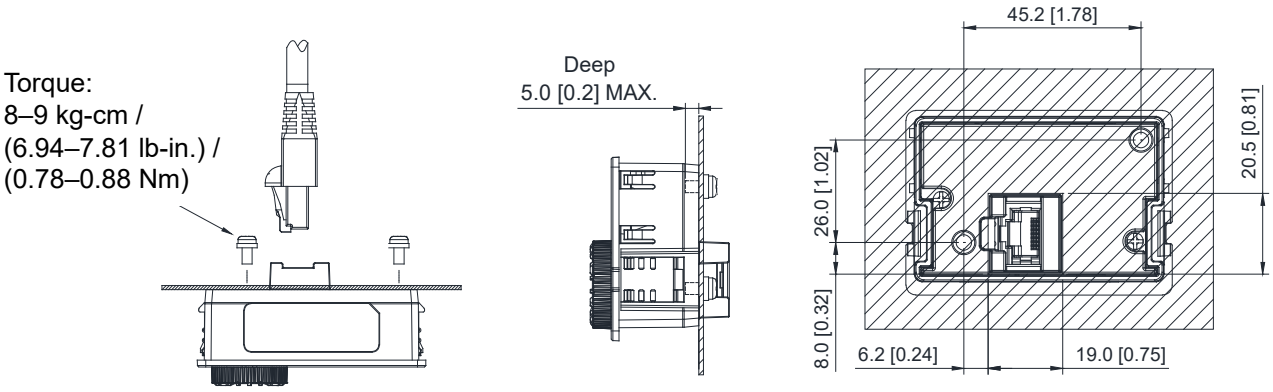

Direct Mounting on Plate

Unit: mm [inch]

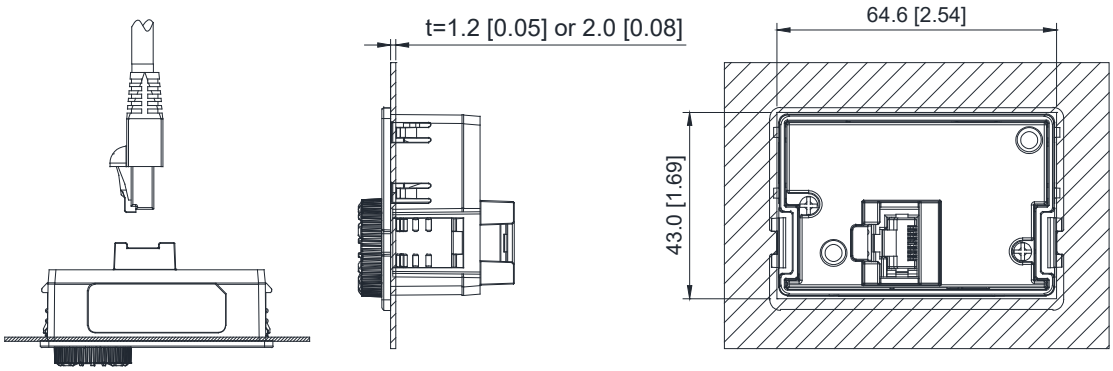

Embedded Mounting in Plate

GS30 Series Optional Accessories – Line Reactors/ VTF Filters

GS30 Line Reactors/Voltage Time Filters

Installing an AC Line Reactor on the input side of an AC motor drive can increase line impedance, improve the power factor, reduce input current, increase system capacity, and reduce interference generated from the motor drive.

Installing a load reactor or voltage time filter on the drive's output side can increase the high-frequency impedance to reduce the dV/dT and terminal voltage to protect the motor. Use output filters if the motor cable length exceeds 100ft.

GS30 Line/Load Reactor and AC Output Filter Selections

GS10 Model	CT Input Amps (rms)	Saturation Amps (rms)	Motor HP	Line Reactor (LR2)*	Load Reactor (LR2)*	AC Output Filter (VTF)*
GS31-20P5	2.8	5.6	1/2	LR2-20P5-1PH	LR2-20P5	VTF-246-CFG
GS31-21P0	4.8	9.6	1	LR-23P0	LR2-21P0	VTF-24-FH
GS31-22P0	7.5	15	2	LR2-22P0-1PH	LR-22P0	VTF-246-HKL
GS31-23P0	11	22	3	LR-27P5	LR-25P0	VTF-24-JL
GS33-20P5	2.8	5.6	1/2	LR2-20P5	LR2-20P5	VTF-246-DGH
GS33-21P0	4.8	9.6	1	LR2-20P7	LR2-20P7	VTF-24-FH
GS33-22P0	7.5	15	2	LR-22P0	LR-22P0	VTF-246-HKL
GS33-23P0	11	22	3	LR-25P0	LR-25P0	VTF-24-JL
GS33-25P0	17	34	5	LR-27P5	LR-25P0	VTF-46-LM
GS33-27P5	25	50	7 1/2	LR-2010	LR-2010	VTF-46-NP
GS33-2010	33	66	10	LR-2015	LR-2010	VTF-246-LPQ
GS33-2015	46	92	15	LR-2020	LR-2015	VTF-246-NRS
GS33-2020	65	130	20	LR-2030	LR-2020	VTF-246-PSU
GS33-2025	75	140	25	LR-2030	LR-2025	VTF-246-PSU
GS33-2030	90	180	30	LR-2030	LR-2030	VTF-246-RUV
GS33-2040	120	240	40	LR-2040	LR-2040	VTF-246-RUV
GS33-2050	146	292	50	LR-2050	LR-2050	VTF-246-SVW
GS33-40P5	1.5	3	1/2	LR2-40P5	LR2-40P5	VTF-46-DE
GS33-41P0	2.7	5.4	1	LR2-41P0	LR2-41P0	VTF-246-CFG
GS33-42P0	4.2	8.4	2	LR2-43P0	LR2-42P0	VTF-24-FH
GS33-43P0	5.5	11	3	LR2-45P0	LR2-43P0	VTF-24-FH
GS33-45P0	9	18	5	LR2-47P5	LR2-45P0	VTF-246-HKL
GS33-47P5	13	26	7 1/2	LR-4010	LR2-47P5	VTF-24-JL
GS33-4010	17	34	10	LR-4015	LR-4010	VTF-24-JL
GS33-4015	25	50	15	LR-4015	LR-4015	VTF-246-LPQ
GS33-4020	32	64	20	LR-4020	LR-4020	VTF-246-LPQ
GS33-4025	38	76	25	LR-4030	LR-4025	VTF-246-MQR
GS33-4030	45	90	30	LR-4040	LR-4030	VTF-246-NRS
GS33-4040	60	120	40	LR-4050	LR-4040	VTF-246-NRS
GS33-4050	75	150	50	LR-4050	LR-4050	VTF-246-PSU
GS33-4060	91	182	60	LR-4060	LR-4060	VTF-246-PSU
GS33-4075	112	224	75	LR-4100	LR-4075	VTF-246-RUV
GS33-4100	150	300	100	LR-4100	LR-4100	VTF-246-SVW

** All specs for the LR2 and VTF can be found at www.automationdirect.com*

*Dura*Pulse Optional Accessories – Mounting Kits

DIN Rail Mounting

Frame A, B, and C GS10, GS20, and GS30 drives can be DIN rail mounted using a DIN rail mounting kit. One kit is used for A and B frame drives, while a second kit is used for C frame drives. Please see the GSxx series User Manual for additional information and installation instructions.

GSxx DIN Rail Mounting Compatibility

Drive Model			Frame	DIN Rail Kit	Price
GS10 Series	GS20 Series	GS30 Series			
GS11N-10P2	GS21-10P2	–	A1	GS20A-DR-AB	$6.00
GS11N-20P2	GS21-20P2	–	A1		
GS13N-20P2	GS23-20P2	–	A1		
GS13N-20P5	GS23-20P5	GS31-20P5	A2		
–	–	GS33-20P5	A2		
–	–	GS33-40P5	A2		
GS11N-10P5	GS21-10P5	GS33-21P0	A3		
GS11N-20P5	GS21-20P5	GS33-41P0	A3		
GS13N-40P5	GS23-40P5	–	A4		
GS13N-21P0	GS23-21P0	–	A5		
–	GS23-41P0	–	A5		
–	GS23-51P0	–	A5		
GS13N-41P0	–	–	A6		
GS13N-22P0	GS23-22P0	GS33-22P0	B1		
GS13N-42P0	GS23-42P0	GS33-42P0	B1		
–	GS23-52P0	–	B1		
GS11N-21P0	GS21-21P0	GS31-21P0	B2		
GS11N-22P0	GS21-11P0	GS31-22P0	C1	GS20A-DR-C	$6.00
GS11N-23P0	GS21-22P0	GS33-23P0	C1		
GS13N-23P0	GS21-23P0	GS33-25P0	C1		
GS13N-25P0	GS23-23P0	GS33-43P0	C1		
GS11N-11P0	GS23-25P0	GS33-45P0	C1		
GS13N-43P0	GS23-43P0	–	C1		
GS13N-45P0	GS23-45P0	–	C1		
–	GS23-53P0	–	C1		
–	GS23-55P0	–	C1		

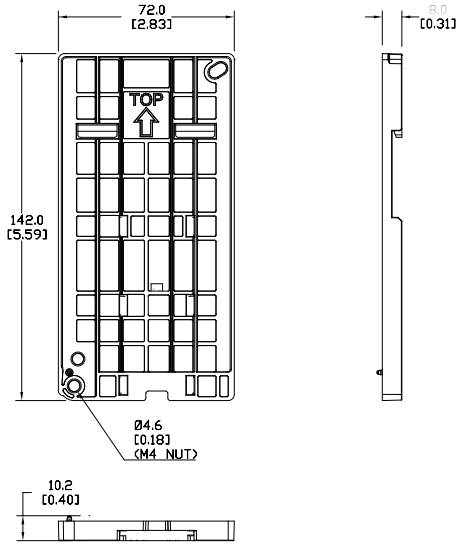

GS20A-DR-AB

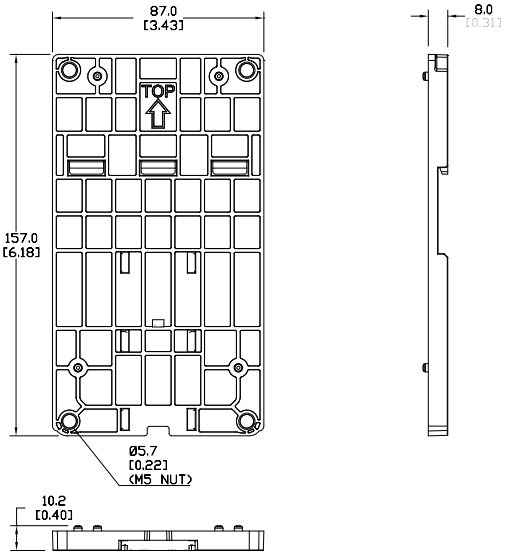

GS20A-DR-C

*Dura*Pulse Optional Accessories – Mounting Kits

Mounting Adapter Plate

The mounting adapter plate can be used to change the wiring orientation for the GS10, GS20, and GS30 series and provides flexibility for installation. This accessory changes the wiring method from the "bottom-mains input/ bottom-motor output" to the "top-mains input/bottom-motor output" for GS10/GS20/GS30. Use the table below to select the correct mounting plate for your drive. Please see your GSxx series User Manual for additional information and installation instructions.

GSxx Mounting Adapter Compatibility

Drive Model			Frame	Mounting Plate	Price
GS10 Series	GS20 Series	GS30 Series			
GS11N-10P2	GS21-10P2	–	A1	GS20A-MP-AB	$51.00
GS11N-20P2	GS21-20P2	–	A1		
GS13N-20P2	GS23-20P2	–	A1		
GS13N-20P5	GS23-20P5	GS31-20P5	A2		
–	–	GS33-20P5	A2		
–	–	GS33-40P5	A2		
GS11N-10P5	GS21-10P5	GS33-21P0	A3		
GS11N-20P5	GS21-20P5	GS33-41P0	A3		
GS13N-40P5	GS23-40P5	–	A4		
GS13N-21P0	GS23-21P0	–	A5		
–	GS23-41P0	–	A5		
–	GS23-51P0	–	A5		
GS13N-41P0	–	–	A6		
GS13N-22P0	GS23-22P0	GS33-22P0	B1		
GS13N-42P0	GS23-42P0	GS33-42P0	B1		
–	GS23-52P0	–	B1		
GS11N-21P0	GS21-21P0	GS31-21P0	B2		
GS11N-22P0	GS21-11P0	GS31-22P0	C1	GS20A-MP-C	$60.00
GS11N-23P0	GS21-22P0	GS33-23P0	C1		
GS13N-23P0	GS21-23P0	GS33-25P0	C1		
GS13N-25P0	GS23-23P0	GS33-43P0	C1		
GS11N-11P0	GS23-25P0	GS33-45P0	C1		
GS13N-43P0	GS23-43P0	–	C1		
GS13N-45P0	GS23-45P0	–	C1		
–	GS23-53P0	–	C1		
–	GS23-55P0	–	C1		

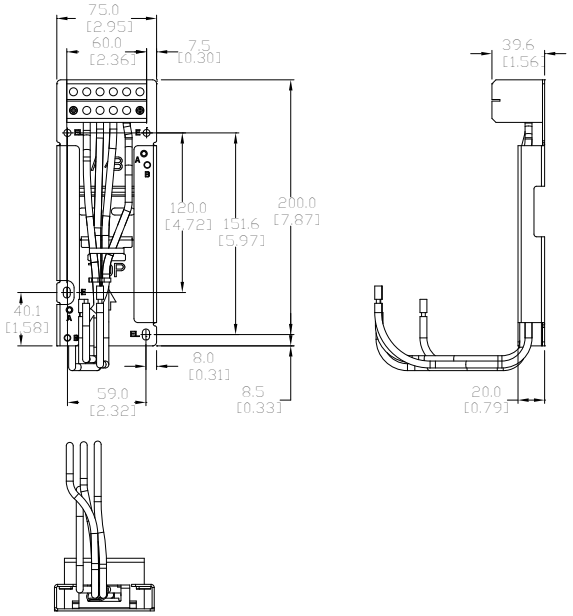

GS20A-MP-AB

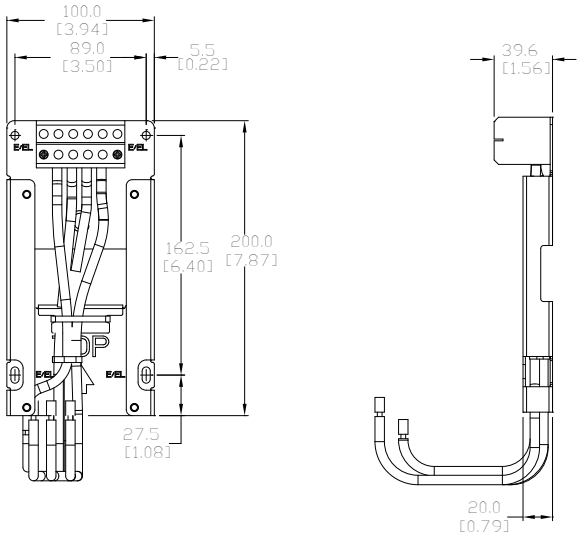

GS20A-MP-C

*Dura*Pulse Optional Accessories – Replacement Cooling Fans

Cooling Fans for GSxx Series Drives (Spare/Replacement)

NOTE: The fans described below are included with the applicable GS10, GS20(X), and GS30 AC Drive, and are also available for purchase separately as spare/replacement components.

GS10, GS20(X), GS30 – Fan Selection Table

Drive Model			Fan Model *		Description	Size	Voltage
GS10 Series	GS20(X) Series	GS30 Series	Part #	Price			
GS13N-22P0 GS13N-42P0	GS23-22P0 GS23-42P0 GS23-52P0	GS31-21P0 GS33-22P0 GS33-42P0	GS20A-FAN-B	$24.00	GS20 series main cooling fan, replacement.	40x40x15 mm	12VDC
–	GS21X-23P0 GS23X-23P0 GS23X-25P0 GS23X-45P0	–	GS20XA-FAN-B	$56.00	GS20X series main cooling fan, replacement	60x60x25 mm	
GS11N-11P0 GS11N-23P0 GS13N-23P0 GS13N-25P0 GS13N-43P0 GS13N-45P0	GS21-11P0 GS21-22P0 GS21-23P0 GS23-23P0 GS23-25P0 GS23-43P0 GS23-45P0 GS23-53P0 GS23-55P0	GS31-22P0 GS31-23P0 GS33-23P0 GS33-25P0 GS33-43P0 GS33-45P0	GS20A-FAN-C	$26.00	GS20 series main cooling fan, replacement.	50x50x20 mm	
–	GS23X-27P5 GS23X-47P5 GS23X-4010	–	GS20XA-FAN-C	$57.00	GS20X series main cooling fan, replacement	60x60x25 mm	
GS13N-27P5 GS13N-47P5 GS13N-4010	GS23-27P5 GS23-47P5 GS23-4010 GS23-57P5 GS23-5010	GS33-27P5 GS33-47P5 GS33-4010	GS20A-FAN-D	$30.00	GS20 series main cooling fan, replacement.	60x60x25 mm	
–	GS23-2010 GS23-2015 GS23-4015 GS23-4020	GS33-2010 GS33-2015 GS33-4020	GS20A-FAN-E	$41.00	GS20 series main cooling fan, replacement.	92x92x28 mm	24VDC
–	GS23-2020 GS23-4025 GS23-4030	GS33-2020 GS33-4025 GS33-4030	GS20A-FAN-F	$45.00	GS20 series main cooling fan, replacement.	92x92x38 mm	
–	–	GS33-2025 GS33-2030 GS33-4040	GS30A-FAN-G	$52.00	GS30 series main cooling fan, replacement	204x87x50 mm	
–	–	GS33-4050 GS33-4060	GS30A-FAN-H	$98.00	GS30 series main cooling fan, replacement	206x95x50 mm	
–	–	GS33-2040 GS33-2050 GS33-4075 GS33-4100	GS30A-FAN-I	$151.00	GS30 series main cooling fan, replacement	260x121x50 mm	

** These fans are included with the GSx series drive, and also available separately as spare or replacement components. Electrical connectors are included.*

Example GS20A replacement Fan

*Dura*Pulse Optional Accessories – RF Filter

RF Filter

Zero phase reactors, (aka RF noise filters) help reduce radiated noise from the inverter wiring. The wiring must go through the opening to reduce the RF component of the electrical noise. Loop the wires three times (four turns) to attain the full RF filtering effect. For larger wire sizes, place multiple zero-phase reactors (up to four) side by side for a greater filtering effect. These are effective for noise reduction on both the input and output sides of the inverter. Attenuation quality is good in a wide range from 500kHz to 10MHz.

Wiring Method

Wind each wire four times around the core, as shown in diagram A to the right. The reactor must be put at inverter side as closely as possible.

If you are unable to wire as above due to wire size or another aspect of your application, put all wires through four cores in series without winding, as in diagram B to the right.

RF Filter Selection

Drive Series	Filter Model	Drawing	Price
GS10 / GS20(X) / GS30	RF008X00A	PDF	$40.00
GS30	RF004X00A	PDF	$47.00
GS30 (Frame H-I)	RF002X00A	PDF	$235.00

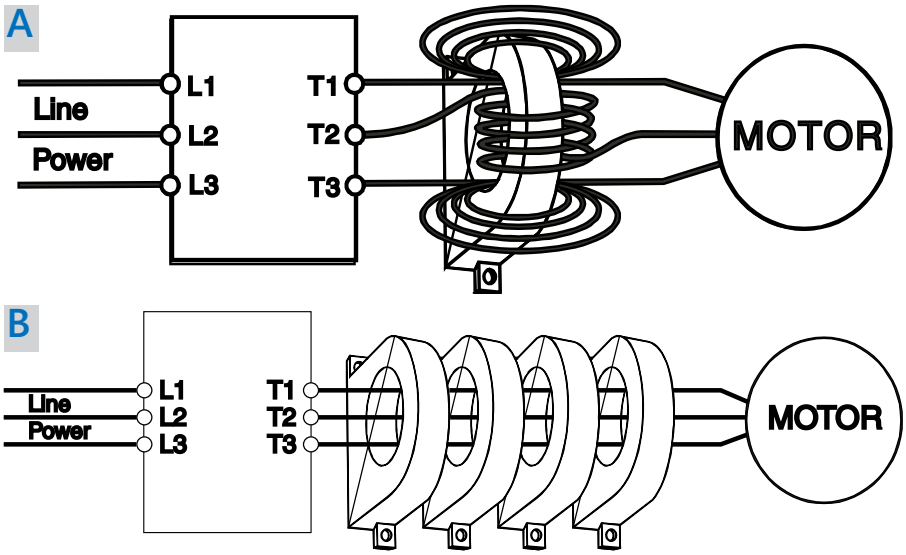

*Dura*Pulse Accessories – Software GSoft2 Drive Configuration Software

GSoft2 Drive Configuration Software

Available for *FREE* Download

***DURA*PULSE Drives GSOFT2 Drive Configuration Software**			
Part Number	***Price****	***Description***	***For GS Drive***
GSOFT2	$10.50	GSOFT2 Windows configuration software, USB or free download. For use with DURApulse GS4, GS10, GS20, GS20X and GS30 series AC drives. Requires PC serial port or USB-485M serial adapter.	GS4 – all GS10 – all GS20(X) – all GS30 – all
USB-485M	$69.00	PC adapter, USB A to RS-485 (RJ45/RJ12).	GS4/GS10
USB-CBL-AB3	$12.00	Programming cable, USB A to USB B, 3ft cable length.	GS4 – all (for Drive FW only) GS20(X) – all GS30 – all
**** GSOFT2 can be downloaded for free or purchased on USB from AutomationDirect.com (search for GSOFT2).***			

GSOFT2 Drive Configuration Software

GSoft2 is the configuration software for the Automation *Dura*Pulse family of drives. It is designed to allow you to connect a personal computer to the drive, and perform a variety of functions.

GSoft2 includes an integral help file with software instructions. GSoft2 can be downloaded for free or purchased on USB from AutomationDirect.com (search for GSoft2).

Functions

- Create new drive configurations
- Upload/download drive configurations
- Edit drive configurations
- Archive/store multiple drive configurations on your PC
- Trend drive operation parameters (not available with GS10)
- Tune the drive PID loop
- View real time key operating parameters
- Real-time trending
- Start/Stop drive and switch directions, provided drive is set up for remote operation
- View drive faults

Computer System Requirements

GSoft2 will run on Windows PCs that meet the following requirements:

- Windows OS: ***8***: 32 & 64 bit, ***8.1***: 32 & 64 bit, ***10***: 64 bit, 11
- Edge or Chrome (for HTML help support)
- 32 Mb of available memory
- 10 Mb hard drive space
- Available USB port
- USB to RS485 adapter needed for GS4 and GS10 models

GS4/GS20(X)/GS30 Accessories – Software
GSLogic PLC Programming Software

Optional Accessory Software Applicable Only to AC Drive Series:

- *GS4*
- *GS20(X)*
- *GS30*

GSLOGIC Drive Configuration Software

Available for *FREE* Download

GS4/GS20(X)/GS30 *DURA*PULSE Drives GSLogic PLC Programming Software

Part Number	*Price**	*Description*	*For GS Drive*
GSLOGIC	$10.50	GSLOGIC Windows logic software, USB or free download. For use with DURApulse GS4, GS20, GS20X and GS30 series AC drives. Requires PC serial port or USB-485M serial adapter.	GS4 - all GS20(X) – all GS30 – all
USB-485M	$69.00	PC adapter, USB A to RS-485 (RJ45/RJ12).	GS4 – all
USB-CBL-AB3	$12.00	Programming cable, USB A to USB B, 3ft cable length.	GS20(X) – all GS30 – all

** GSLOGIC can be downloaded for free or purchased on USB from AutomationDirect.com (search for GSLOGIC).*

PLC Summary

The GS4, GS20(X), and GS30 drives include a built-in PLC. Programmed in ladder logic, the PLC provides a comprehensive set of instructions and 2,000 (GS20(X)), 5,000 (GS30), or 10,000 (GS4) steps of programming capacity. GSLogic PLC software includes a Help File which contains the detailed information needed to use the PLC.

The PLC functionality is included with every GS4, GS20(X), and GS30 drive, and can be accessed over communications by external PLCs (via serial Modbus), or by the drive itself (using built-in PLC instructions). The PLC is perfectly suited for applications where digital and analog I/O requirements are small. For applications with complex PLC programming or large I/O requirements, please consider Click, Productivity, or Do-More/BRX. All of these PLCs can be easily integrated with the GS drive family or PLC. The GS4-KPD keypad is capable of storing multiple PLC programs.

There are two methods for communicating from the PLC to the drive. The first method is to use the WPR and RPR instructions available in the PLC's library. These two instructions can read from or write to any AC drive parameter in the same physical drive. The second method is to use Modbus RTU. The PLC is a Serial Modbus slave only. A Modbus RTU master can communicate with the PLC via serial only; optional communication cards cannot address the PLC. If communication cards (EtherNet/IP or Modbus TCP) are the desired method of communication, the drive includes PLC Buffers parameters that can be used. Simply write the needed information from the PLC into the drive's PLC buffer parameters using the WPR instruction. The Modbus TCP or EtherNet/IP cards can then read the VFD parameters.

GSLogic Introduction

GSLogic is the drive PLC programming software for the AutomationDirect GS4, GS20(X), and GS30 family of drives. It is designed to enable you to perform a variety of drive PLC programming functions. Windows editing functions like cut, copy, paste, multiple windows, etc., are supported. GSLogic also provides for register editing, settings, file reading, saving, online monitoring settings, and other convenience functions, such as:

- Upload/download drive PLC program files to the onboard PLC
- Create new drive PLC programs
- Edit drive PLC programs
- Archive/store multiple drive PLC programs on your PC or the GS4-KPD drive keypad
- Control drive PID loops (FPID instructions)
- View in real time all drive PLC registers
- Print drive PLC program files

GSLogic includes an integral help file that includes software instructions, how to use GSLogic, and how to use the GS drive PLC.

GSLogic System Requirements

GSLogic is a Windows-based programming software environment. Please check the following requirements when choosing your PC configuration:

- Windows OS: ***8***: 32 & 64 bit, ***8.1***: 32 & 64 bit, ***10***: 64 bit, ***11***
- 300MB free hard-disk space
- USB Port required for project transfer to drive
- USB-485M serial adapter required for GS4 models

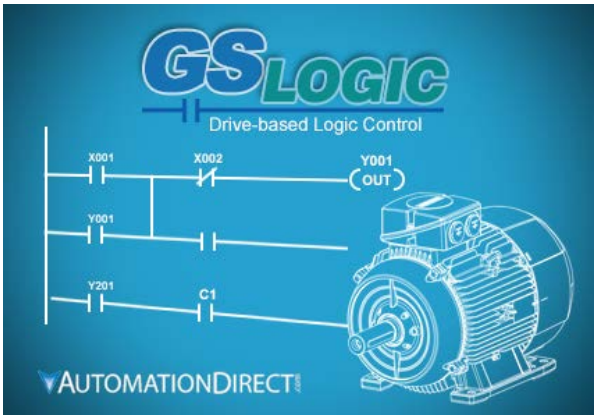

*Dura*Pulse Optional Accessories – Advanced LCD Keypad

Advanced Keypad

NOTE: The keypad described below is included with the GS4 AC Drive, and is also available for purchase separately as a spare/replacement component for GS4, or an optional upgrade for GS10/GS20(X)/GS30.

Keypad Panel-Mounting Kit

NOTE: The keypad panel-mounting kit described below is an optional accessory that is NOT included with the GS10/GS20(X)/GS30 AC drive.

GSx Series *DURA*PULSE Drives Keypad and Keypad Panel-Mounting Kit

Part Number	Price	Description	For GS Drive
GS4-KPD*	$107.00	Spare or replacement keypad for GS4 AC drives; optional advanced keypad for GS20(X) drives; includes RJ45 connector; great for maintenance or back-up programs.	GS4 – all GS10 – all GS20(X) – all GS30 – all
GS4-BZL**	$29.50	Keypad Panel-Mounting Kit for remote surface mounting or embedded mounting of the AC drive removable keypad; hardware included. Use a standard Cat5e RJ45 patch cable (not included) to connect a remote-mounted keypad to the drive. Max cable length for remote-mounted keypad = 5m.	GS4 – all GS10 – all GS20(X) – all GS30 – all

** A keypad is included with each GS4 AC Drive; additional keypads are available for spare/replacement components.*
*** The keypad mounting kit is an optional accessory that is NOT included with the GS4 AC drive; for mounting the keypad remotely from the drive.*
Note: Keypad firmware can only be upgraded when connected to a GS4 drive.

GS4-KPD

RJ45 Connector

Dimensions (mm [in])

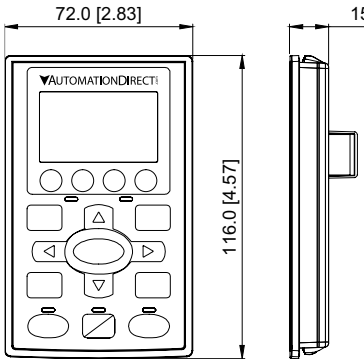

GS4-BZL

Wall Mounting

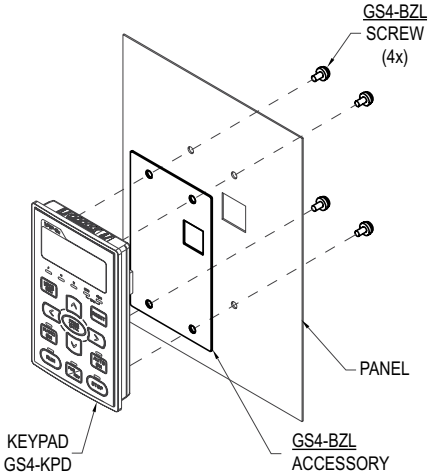

Embedded Mounting

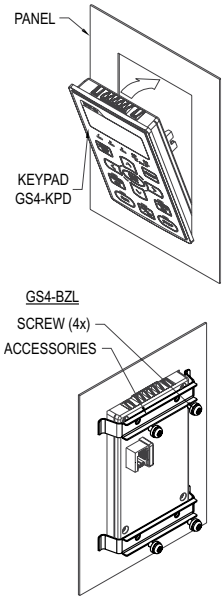

GS30 *DURA*PULSE Drives Accessories – Dynamic Braking Component Selection

Dynamic Braking Components

Use the table below to find the appropriate braking resistor and braking unit (if applicable) for your GS30 series AC drive. For more information and installation instructions, please see the GS30 User Manual. All listed resistors are available for purchase at www.automationdirect.com.

For drive models GS33-2040, GS33-2050, GS33-4050, GS33-4060, GS33-4075, and GS33-4100, a dynamic braking unit must be used in conjunction with the braking resistor, as shown in the GS30 AC Drive Braking Component Selection table.

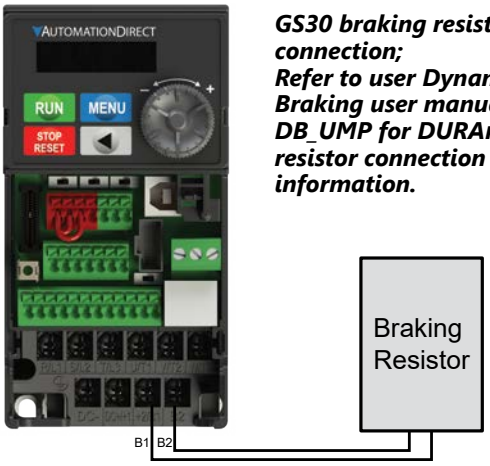

GS30 braking resistor connection; Refer to user Dynamic Braking user manual GS-DB_UMP for DURAPULSE resistor connection information.

GS30 AC Drive Braking Component Selection

Drive Voltage	Motor Power (hp)	Drive Model	Drive Brake Capacity - Max Torque: Min Resistor Value (Ω)	Drive Brake Capacity - Max Torque: Max Total Brake Current (A)	Braking Unit: Qty.	Braking Unit: Part #	125% Braking Torque @ 10% Duty Cycle*: Open Type Braking Resistor: Part #	Open Type: Qty.**	Open Type: Wiring Diagram	Open Type: Brake Torque (kg•m)	Open Type: Total Brake Current (A)	NEMA1 Resistors with Thermal Switch: Part #	NEMA1: Qty.	NEMA1: Wiring Diagram	NEMA1: Total Brake Current (A)
230V	1/2	GS31-20P5	95.0	4	–	n/a	GS-BR-080W200	1	A	0.3	1.9	BR-N1-240W150	1	A	2.6
	1	GS31-21P0	63.3	6				1		0.5			1		
	2	GS31-22P0	47.5	8			GS-BR-200W091	1		1	4.2	BR-N1-280W50	1		7.8
	3	GS31-23P0	38.0	10			GS-BR-300W070	1		1.5	5.4		1		
	1/2	GS33-20P5	95.0	4			GS-BR-080W200	1		0.3	1.9	BR-N1-240W150	1		2.6
	1	GS33-21P0	63.3	6				1		0.5			1		
	2	GS33-22P0	47.5	8			GS-BR-200W091	1		1	4.2	BR-N1-280W50	1		7.8
	3	GS33-23P0	38.0	10			GS-BR-300W070	1		1.5	5.4		1		
	5	GS33-25P0	19.0	20			GS-BR-400W040	1		2.5	9.5	BR-N1-800W25	1		15.6
	7 1/2	GS33-27P5	16.5	23			GS-BR-1K0W020	1		3.7	19	BR-N1-800W18P0	1		21.7
	10	GS33-2010	14.6	26				1		5.1		BR-N1-1K1W15P0	1		26.0
	15	GS33-2015	12.6	29			GS-BR-1K5W013	1		7.4	29	BR-N1-1K5W14P0	1		27.9
	20	GS33-2020	8.3	46			GS-BR-1K0W4P3	2S	B	10.2	44	BR-N1-2K2W08P6	1		45.3
	25	GS33-2025	8.3	46			GS-BR-1K0W016	2P	C	14.6	47.5		1		
	30	GS33-2030	5.8	66			GS-BR-1K5W3P3	2S	B	17.9	57.6	BR-N1-3K0W05P8	1		67.2
	40	GS33-2040	4.8	79	2	1DBU	Not offered					BR-N1-1K6W10P0	2 (1/DBU)	E	39.0
	50	GS33-2050	3.2	119	2	2DBU						BR-N1-2K2W06P8	2 (1/DBU)		57.4
460V	1/2	GS33-40P5	380.0	2	–	n/a	GS-BR-080W750	1	A	0.3	1	BR-N1-250W400	1	A	2.0
	1	GS33-41P0	190.0	4				1		0.5		BR-N1-240W200	1		3.9
	2	GS33-42P0	126.7	6			GS-BR-200W360	1		1	2.1	BR-N1-240W150	1		5.2
	3	GS33-43P0	108.6	7			GS-BR-300W250	1		1.5	3	BR-N1-500W200	1		3.9
	5	GS33-45P0	84.4	9			GS-BR-400W150	1		2.5	5.1	BR-N1-500W130	1		6.0
	7 1/2	GS33-47P5	50.7	15			GS-BR-1K0W075	1		3.7	10.2	BR-N1-720W85	1		9.2
	10	GS33-4010	40.0	19				1		5.1		BR-N1-1K2W50	1		15.6
	15	GS33-4015	33.0	23			GS-BR-1K5W043	1		7.4	17.6	BR-N1-1K5W40	1		19.5
	20	GS33-4020	26.2	29			GS-BR-1K0W016	2S	B	10.2	24	BR-N1-1K7W30	1		26.0
	25	GS33-4025	26.2	29				2S		12.2		BR-N1-2K3W26	1		30.0
	30	GS33-4030	23.0	33			GS-BR-1K5W013	2S		14.9	29	BR-N1-2K8W25	1		31.2
	40	GS33-4040	15.2	50			GS-BR-1K5W040	2P	C	24.4	38.0	BR-N1-4K0W16P0	1		48.8
	50	GS33-4050	12.7	60	1	4DBU	Not offered					BR-N1-4K7W14P7	1	E	53.1
	60	GS33-4060	12.7	60	1	4DBU						BR-N1-6K9W13P6	1		57.4
	75	GS33-4075	9.5	80	2	3DBU						BR-N1-3K6W20	2 (1/DBU)	F	39.0
	100	GS33-4100	6.3	121	2	4DBU						BR-N1-4K7W14P7	2 (1/DBU)		53.1

** 10% Duty Cycle with maximum ON (braking) time for 10 seconds.*

*** S= series wiring, P= parallel wiring.*

GSxx *DURA*PULSE Drives Accessories – Dynamic Braking Component Selection

Brake Wiring

Use your drive's Braking Component Selection table to determine the appropriate brake resistor model and configuration for your drive. Refer to the diagrams below for examples on how to wire each possible configuration

Diagram A (Drive + 1 Resistor or NEMA1 Resistor):

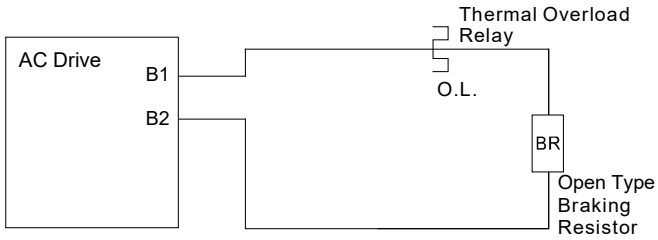

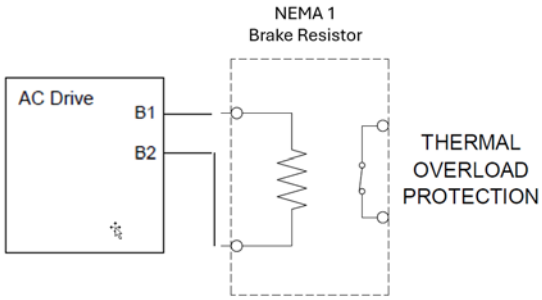

Diagram B (Drive + 2 Series Resistors):

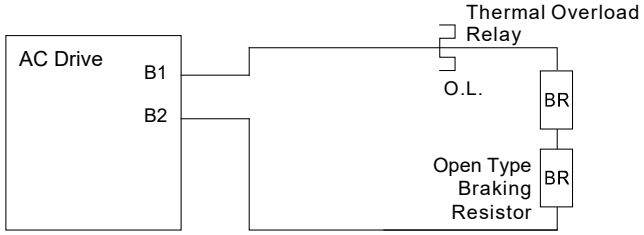

Diagram C (Drive + 2 Parallel Resistors):

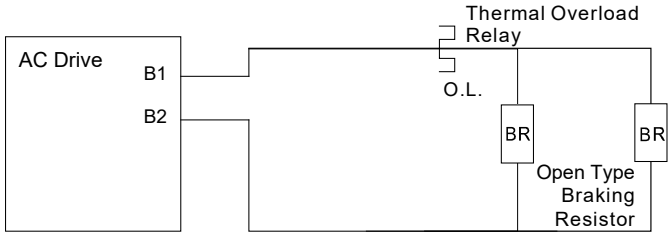

Diagram D (drive + 2 Series and 2 Parallel Resistors):

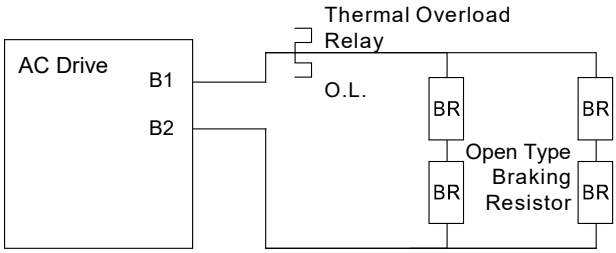

GSxx *DURA*PULSE Drives Accessories – Dynamic Braking Component Selection

Brake Wiring, *continued*

Diagram E (Drive + 1 DBU with 1 NEMA1 Resistor:

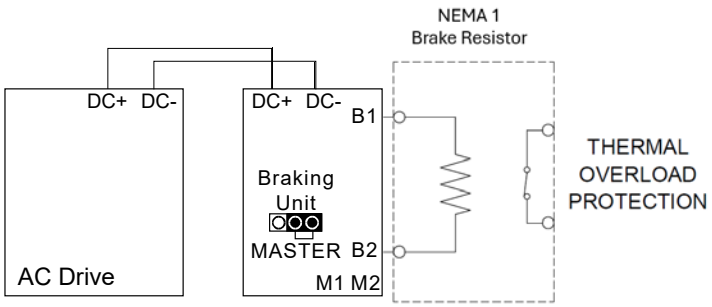

Diagram F (Drive + DBUs with 1 Resistor or NEMA1 Resistor per DBU):

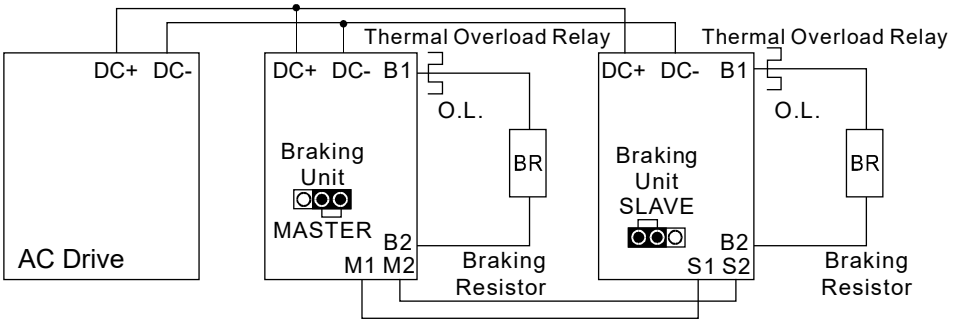

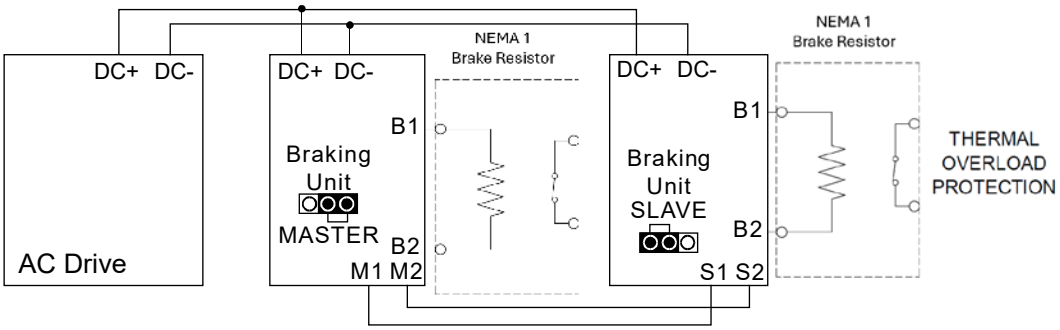

GS/*DURA*PULSE Drives Accessories – Braking Unit Specifications for GS4 & GS30 *DURA*PULSE AC Drives

Braking Units for DURApulse AC Drives

Overview

Braking units are applied to absorb the motor regeneration energy when the three-phase induction motor stops by deceleration.

GS-xDBU braking units, used with GS series braking resistors, provide optimum braking performance.

Note: Braking units are available ONLY for DURApulse drives.

WARNING: TO AVOID INJURY OR MECHANICAL DAMAGE, PLEASE REFER TO USER MANUAL GS-DB_UMP BEFORE WIRING.

Dynamic Braking Unit Specifications – for GS4 & GS30 *DURA*PULSE AC Drives

	Braking Unit Part Number	GS-1DBU	GS-2DBU	GS-3DBU	GS-4DBU	GS-5DBU	GS-6DBU	GS-7DBU
	Price	$292.00	$292.00	$395.00	$395.00	$1,644.00	$1,710.00	$1,877.00
	Nominal Voltage (VAC)	230		460				
	Max Motor Capacity (hp/[kW])	20 [15]	30 [22]	40 [30]	60 [45]	150 [110]	200 [160]	250 [185]
Output Rating	Max Discharge Current (A) @ 10% Duty Cycle*	40	60	40	60	126	190	225
Output Rating	Continuous Discharge Current (A)	15	20	15	18	45	50	100
Output Rating	Braking Startup Voltage (VDC)	330/345/360/ 380/400/415 ±3V		600/690/720/ 760/800/830 ±6V		618/642/667/690/ 725/750 ±6V		
Output Rating	Maximum On-Time (s)	10						
	Input DC Voltage (VDC)	200–400		400–800		400–750		
	Min Equivalent Resistor for Each Braking Unit (Ω)	10	6.8	20	13.6	6	4	3.4
Protection	Power CHARGE Lamp/LED	Comes ON until DC bus voltage (+P – -N) drops below 50VDC				Comes ON when DC bus voltage (DC+ – DC-) rises above 300VDC. Goes OFF when DC bus voltage (DC+ – DC-) drops below 100VDC.		
Protection	Braking ACT Lamp/LED	ON during braking						
Protection	Fault ERR Lamp	ON if a fault has occurred				n/a		
Protection	Overcurrent Level LED (A)	n/a				190	290	340
Protection	Overheat LED	n/a				Comes ON > 176°F [80°C]; Goes OFF < 149°F [65°C]		
Protection	Heat Sink Overheat Temperture	203°F [95°C]				n/a		
Protection	Alarm Output Relay Contact	5A @ 120VAC/28VDC (RA,RB,RC)				3A @ 250VAC/28VDC (RA,RC)		
Environment	Installation Location	indoor (no corrosive gases; no metallic dust)						
Environment	Operating Temperature	14°F to 122 °F [-10 to +50 °C]						
Environment	Storage Temperature	-4 to +140 °F [-20 to +60 °C]						
Environment	Humidity	less than 90% RH, non-condensing						
Environment	Vibration	9.8 m/s^2 [1G] under 20Hz ; 2m/s^2 [0.2G] at 20–50 Hz						
	Mechanical Configuration	IP50 wall-mount enclosed				IP10 wall-mount enclosed		

** 10% Duty Cycle with maximum ON (braking) time of 10 seconds*

GS/*DURA*PULSE Drives Accessories – Braking Unit Basic Wiring for GS4 & GS30 *DURA*PULSE AC Drives

Basic Dynamic Braking Wiring Diagram for GS4 & GS30 *DURA*PULSE AC Drives

Note: Smaller-capacity DURApulse AC Drives can connect directly to braking resistors, and do not require Dynamic Braking Units for braking. Other applications require multiple Resistors and/or multiple Dynamic Braking Units. Refer to "Dynamic Braking Component Selection" to determine which braking components are required for your application(s), and to the DURApulse Drives Dynamic Braking User Manual for complete wiring diagrams.

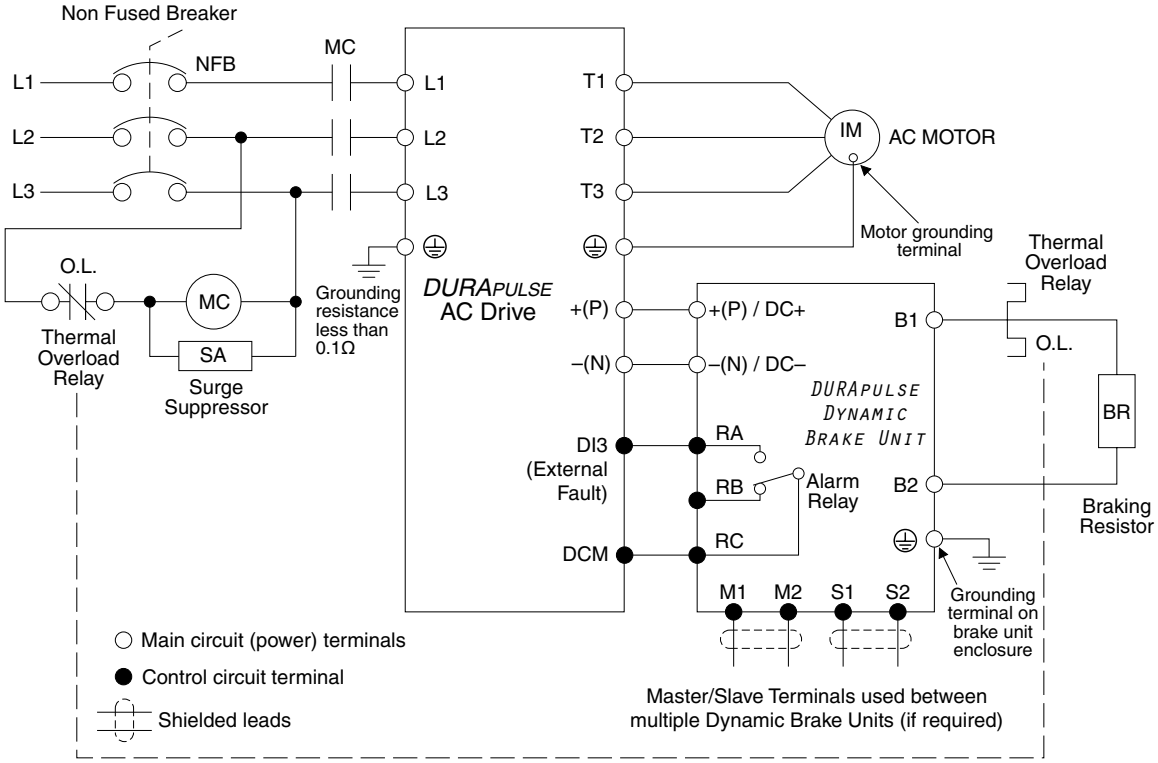

GS/*DURA*PULSE Drives Accessories – Braking Unit Dimensions for GS4 & GS30 *DURA*PULSE AC Drives

Braking Unit Dimensions (Dimensions = mm [in])

See our website: www.AutomationDirect.com for complete engineering drawings.

A) DBU ≤ 100hp (GS-1DBU, GS-2DBU, GS-3DBU, GS-4DBU)

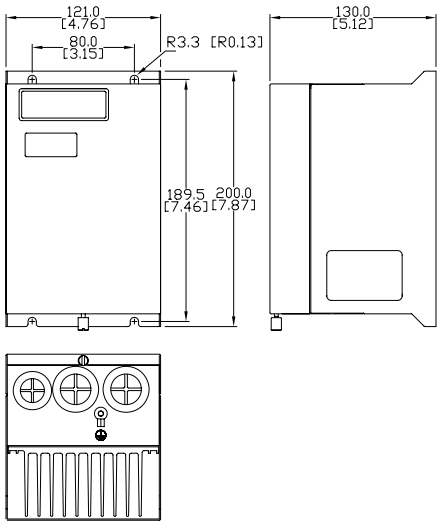
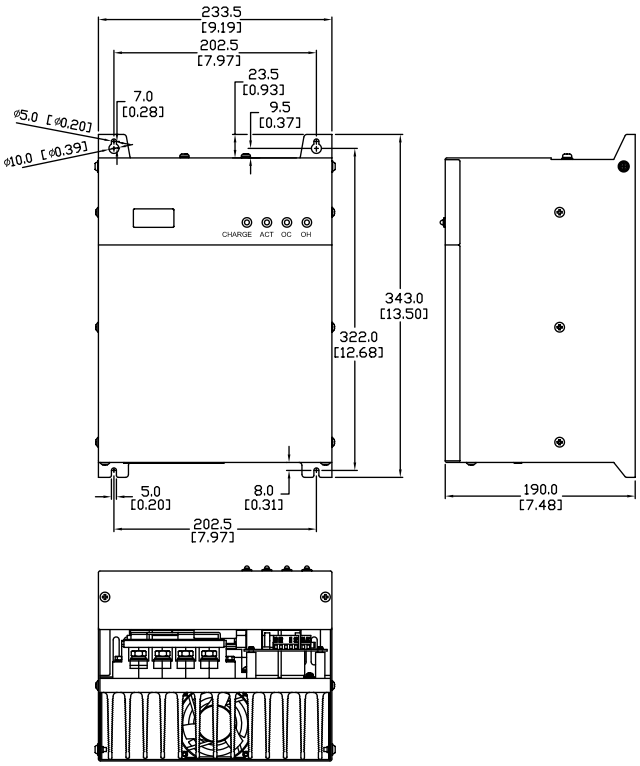
B) DBU > 100hp (GS-5DBU, GS-6DBU, GS-7DBU)