STELLAR®
soft starter

AUTOMATIONDIRECT.com

STELLAR® SR55 SOFT STARTER USER MANUAL

SR55_UMW
Second Edition, Revision B

Automation Direct

BLANK
PAGE

Warnings and Trademarks

~ WARNING ~

Thank you for purchasing automation equipment from Automationdirect.com®, doing business as AutomationDirect. We want your new automation equipment to operate safely. Anyone who installs or uses this equipment should read this publication (and any other relevant publications) before installing or operating the equipment.

To minimize the risk of potential safety problems, you should follow all applicable local and national codes that regulate the installation and operation of your equipment. These codes vary from area to area and usually change with time. It is your responsibility to determine which codes should be followed, and to verify that the equipment, installation, and operation is in compliance with the latest revision of these codes.

At a minimum, you should follow all applicable sections of the National Fire Code, National Electrical Code, and the codes of the National Electrical Manufacturer's Association (NEMA). There may be local regulatory or government offices that can also help determine which codes and standards are necessary for safe installation and operation.

Equipment damage or serious injury to personnel can result from the failure to follow all applicable codes and standards. We do not guarantee the products described in this publication are suitable for your particular application, nor do we assume any responsibility for your product design, installation, or operation.

Our products are not fault-tolerant and are not designed, manufactured or intended for use or resale as on-line control equipment in hazardous environments requiring fail-safe performance, such as in the operation of nuclear facilities, aircraft navigation or communication systems, air traffic control, direct life support machines, or weapons systems, in which the failure of the product could lead directly to death, personal injury, or severe physical or environmental damage ("High Risk Activities"). AutomationDirect specifically disclaims any expressed or implied warranty of fitness for High Risk Activities.

For additional warranty and safety information, see the Terms and Conditions section of our online catalog. If you have any questions concerning the installation or operation of this equipment, or if you need additional information, please call us at ***770-844-4200***.

This publication is based on information that was available at the time it was printed. At AutomationDirect we constantly strive to improve our products and services, so we reserve the right to make changes to the products and/or publications at any time without notice and without any obligation. This publication may also discuss features that may not be available in certain revisions of the product.

Trademarks

This publication may contain references to products produced and/or offered by other companies. The product and company names may be trademarked and are the sole property of their respective owners. AutomationDirect disclaims any proprietary interest in the marks and names of others.

Copyright 2015, 2017, 2018, 2019 Automationdirect.com® Incorporated
All Rights Reserved

No part of this manual shall be copied, reproduced, or transmitted in any way without the prior, written consent of Automationdirect.com® Incorporated. AutomationDirect retains the exclusive rights to all information included in this document.

~ AVERTISSEMENT ~

Nous vous remercions d'avoir acheté l'équipement d'automatisation de Automationdirect.com®, en faisant des affaires comme AutomationDirect. Nous tenons à ce que votre nouvel équipement d'automatisation fonctionne en toute sécurité. Toute personne qui installe ou utilise cet équipement doit lire la présente publication (et toutes les autres publications pertinentes) avant de l'installer ou de l'utiliser.

Afin de réduire au minimum le risque d'éventuels problèmes de sécurité, vous devez respecter tous les codes locaux et nationaux applicables régissant l'installation et le fonctionnement de votre équipement. Ces codes diffèrent d'une région à l'autre et, habituellement, évoluent au fil du temps. Il vous incombe de déterminer les codes à respecter et de vous assurer que l'équipement, l'installation et le fonctionnement sont conformes aux exigences de la version la plus récente de ces codes.

Vous devez, à tout le moins, respecter toutes les sections applicables du Code national de prévention des incendies, du Code national de l'électricité et des codes de la National Electrical Manufacturer's Association (NEMA). Des organismes de réglementation ou des services gouvernementaux locaux peuvent également vous aider à déterminer les codes ainsi que les normes à respecter pour assurer une installation et un fonctionnement sûrs.

L'omission de respecter la totalité des codes et des normes applicables peut entraîner des dommages à l'équipement ou causer de graves blessures au personnel. Nous ne garantissons pas que les produits décrits dans cette publication conviennent à votre application particulière et nous n'assumons aucune responsabilité à l'égard de la conception, de l'installation ou du fonctionnement de votre produit.

Nos produits ne sont pas insensibles aux défaillances et ne sont ni conçus ni fabriqués pour l'utilisation ou la revente en tant qu'équipement de commande en ligne dans des environnements dangereux nécessitant une sécurité absolue, par exemple, l'exploitation d'installations nucléaires, les systèmes de navigation aérienne ou de communication, le contrôle de la circulation aérienne, les équipements de survie ou les systèmes d'armes, pour lesquels la défaillance du produit peut provoquer la mort, des blessures corporelles ou de graves dommages matériels ou environnementaux («activités à risque élevé»). La société AutomationDirect nie toute garantie expresse ou implicite d'aptitude à l'emploi en ce qui a trait aux activités à risque élevé.

Pour des renseignements additionnels touchant la garantie et la sécurité, veuillez consulter la section Modalités et conditions de notre documentation. Si vous avez des questions au sujet de l'installation ou du fonctionnement de cet équipement, ou encore si vous avez besoin de renseignements supplémentaires, n'hésitez pas à nous téléphoner au ***770-844-4200***.

Cette publication s'appuie sur l'information qui était disponible au moment de l'impression. À la société AutomationDirect, nous nous efforçons constamment d'améliorer nos produits et services. C'est pourquoi nous nous réservons le droit d'apporter des modifications aux produits ou aux publications en tout temps, sans préavis ni quelque obligation que ce soit. La présente publication peut aussi porter sur des caractéristiques susceptibles de ne pas être offertes dans certaines versions révisées du produit.

Marques de commerce

La présente publication peut contenir des références à des produits fabriqués ou offerts par d'autres entreprises. Les désignations des produits et des entreprises peuvent être des marques de commerce et appartiennent exclusivement à leurs propriétaires respectifs. AutomationDirect nie tout intérêt dans les autres marques et désignations.

Copyright 2015, 2017, 2018, 2019 Automationdirect.com® Incorporated

Tous droits réservés

Nulle partie de ce manuel ne doit être copiée, reproduite ou transmise de quelque façon que ce soit sans le consentement préalable écrit de la société Automationdirect.com® Incorporated. AutomationDirect conserve les droits exclusifs à l'égard de tous les renseignements contenus dans le présent document.

Warnings

The owner, installer, and user are responsible for the correct installation and use of the Stellar® SR55, for ensuring that only qualified personnel install the SR55, and for ensuring that the operation and maintenance of the unit complies with the relevant Codes of Practice, Regulations, and Statutory Requirements. The manufacturer or his agent do not assume any expressed or implied liability for any consequences resulting from inappropriate, negligent, or incorrect installation, application, use, or adjustment of the product or circuit design, or from the mismatch of the unit to a motor. To prevent an electrical shock hazard, the SR55 must be properly grounded. The SR55 is not designed for use in hazardous areas. Use in such an area may invalidate the hazardous area certification.

Warning: Read this manual thoroughly before using Stellar® SR55 Series Soft Starters.

Warning: The SR55 uses semiconductor devices in the main (power) circuit, and is not designed to provide isolation. For this reason, isolation device(s) must be installed in the power supply circuit in accordance with the applicable wiring and safety regulations.

Warning: AC input power must be disconnected before performing any maintenance. Do not connect or disconnect wires or connectors while power is applied to the circuit. Maintenance must be performed only by a qualified technician.

Warning: There are highly sensitive electronic components on the printed circuit boards, and these components are especially sensitive to static electricity. To avoid damage to these components, do not touch these components or the circuit boards with metal objects or your bare hands.

Warning: Always replace the cover panel on the unit after gaining access to the electrical connections.

Warning: The SR55 may be destroyed beyond repair if incorrect cables are connected to the input/output terminals. Never connect the SR55 output terminals T1, T2, and T3 directly to the AC main circuit power supply.

Warning: Ground the SR55 soft starter using the ground terminal. The grounding method must comply with the laws of the country where the SR55 is to be installed. Refer to Chapter 2, "Electrical Installation".

BLANK
PAGE

STELLAR®
SR55 SOFT STARTER
USER MANUAL

USER MANUAL REVISION HISTORY

Please include this Manual Number and the Manual Issue, both shown below, when communicating with AutomationDirect Technical Support regarding this publication.

Manual Number: **SR55_UMW**
Manual Issue: **Second Edition, Revision C**
Issue Date: **06/20/2024**

Publication History		
Issue	***Date***	***Description of Changes***
First Edition	06/17/2015	Original Issue
1st Ed., Rev.A	08/17/2015	Ch.2: Control power consumption specs, Bypass contactor info, Ch.3: Parameter holding register notations; Parameter descriptions (P8.7, P9.1, P13.1, P14.0, P15.19); Parameter examples (P12.1, P13.1); Trip codes 601, 1501; Fail Safe codes. Ch.5: Modbus RTU comm note. Ch.6: RJ45–R12 adapter pin-out; Cooling fan running conditions. Appx.A: Recommend save configuration before updating firmware. Appx.D: New Appendix.
1st Ed., Rev.B	02/02/2017	User Manual Number (file name) change; was SR55-M-WO. Ch.1: Dimensions for frame size 3 soft starters. Appx.D: Trip Class rating for Tumblers.
1st Ed., Rev.C	06/18/2018	Ch.3: Parameters P0.12, 0.20~0.35, 0.40~0.55, 5.0, 6.0, 8.16, 9.2, 9.3, 15.19, 26.6 Ch.4: Enabling iERS Ch.5: Note on pg.5–2; Modbus RTU comm pin-out
1st Ed., Rev.D	08/03/2018	Ch.5: CIP Packet Functionality
1st Ed., Rev.E	05/03/2019	Ch.6: Fan installation instructions
1st Ed., Rev.F	09/18/2019	Ch.3: Added warning notes for parameters P25.4, P27.0, P27.2
2nd Ed.	07/09/2020	Ch.3: Added Auto Reset function and parameters Ch.5: Added SR55-CM-ENETIP2
2nd Ed., Rev A	06/16/2022	Ch.5: Updated Modbus Communications Diagram
2nd Ed., Rev B	02/06/2024	Ch.5: Updated EtherNet/IP information
2nd Ed., Rev C	06/20/2024	Ch.6: Corrected dimensions of SR55-FAN-8

BLANK
PAGE

SR55 User Manual
Table of Contents

Contents

Contents of Stellar SR55 Soft Starters User Manual

Warnings and Trademarks . . . W–1
- ~ WARNING ~ . . . W–1
- Trademarks . . . W–1
- ~ AVERTISSEMENT ~. . . . W–2
- Marques de commerce . . . W–2
- Warnings . . . W–3

User Manual Revision History . . . H–1

SR55 Soft Starters User Manual Table of Contents. . . . TOC–1

Chapter 1: Mechanical Installation . . . 1–1
- User Manual Overview. . . . 1–2
  - Overview of this Publication. . . . 1–2
  - Who Should Read This Manual . . . 1–2
  - Supplemental Publications . . . 1–2
  - Technical Support . . . 1–2
  - Special Symbols . . . 1–2
- Mechanical Installation . . . 1–3
  - Mounting . . . 1–3
  - Requirements for an Enclosure . . . 1–3
  - Enclosure Ventilation. . . . 1–3
  - Mechanical Specifications . . . 1–4
  - Dimensions . . . 1–4

Chapter 2: Electrical Installation. . . . 2–1
- Safety Warning . . . 2–2
- Agency Approvals . . . 2–2
- Technical Information and Standards. . . . 2–2
- Electrical Specifications . . . 2–3
- Circuit Protection. . . . 2–4
  - Short-Circuit Protection . . . 2–4
  - Motor overload Protection . . . 2–5
- Wire Sizes and Torques . . . 2–5
- Electrical Connections . . . 2–6
- Electrical Wiring . . . 2–7
  - Power Circuit Wiring . . . 2–7
  - Control Circuit Wiring . . . 2–8

Chapter 3: Configuration and Parameters . . . 3–1

"Heartbeat" LED 3–2
Configuration Overview 3–2
Auto Setup Procedure 3–2
Setup by Individual Parameter Settings 3–2
Configuration From Touchscreen 3–2
Auto Setup Procedure from Touchscreen 3–2
Individual Parameter Settings from Touchscreen 3–2
Touchscreen Pictorial Example – Auto Setup 3–3
Auto Setup Procedure – Parameter Settings 3–4
Auto Reset Function 3–6
Mapping Auto Reset Status to Digital Outputs 3–8
Parameter Summary 3–15
Summary of Parameters Not Configurable Through Touchscreen Menu 3–15
Summary of Parameters for Auto Setup 3–15
Summary of Parameters for Individual Parameter Setup 3–16
Block Transfer Parameters 3–24
Parameter Details 3–25
*Parameters **Not** Configurable Through Touchscreen Menu* 3–25
Parameters in Sequence and Grouped by Touchscreen Navigation 3–30
"Auto Setup" Menu of Parameters 3–30
"Advanced" Menu of Parameters 3–32
"I/O" Menu of Parameters 3–54
"Monitor" Menu of Parameters 3–63
"Log" Menu of Parameters 3–69
"Device" Menu of Parameters 3–88
"Auto Reset" Menu of Parameters 3–94
Trip Code Descriptions 3–101
Fail Safe Codes 3–103
Main Board Trip (2402 – 2436) 3–103
Touchscreen Trip (2501 – 2581) 3–103
Logging Trip (2601 – 2603) 3–104
Fail Safe Trip Codes 3–104
Saving and Loading an SR55 Configuration File 3–105
Chapter 4: Principles of iERS (intelligent Energy Recovery System) 4–1
Principles of the iERS 4–2
Enabling Intelligent Energy Recovery System (iERS) 4–2
Principles of iERS 4–3
Advantages of iERS 4–4
How Much Energy? 4–5
Estimating Energy Savings 4–6
iERS with the SR55 System 4–7
Chapter 4 Glossary of Terms 4–8
Chapter 5: Communications 5–1
SR55 Communications Overview 5–2
Modbus Serial Communications Overview 5–2

Modbus TCP Network Communications Overview . . . 5–2
EtherNet/IP Network Communications Overview . . . 5–2
Modbus Serial Communications . . . 5–3
Modbus RTU Communications Interface . . . 5–3
Modbus RTU Connections . . . 5–3
Modbus Communications Configuration. . . . 5–4
Transmission Modes . . . 5–4
Message Structure For RTU Mode . . . 5–4
Supported Functions . . . 5–5
Memory Map . . . 5–6
Message Timing . . . 5–6
Network Communications – EtherNet/IP and Modbus TCP . . . 5–7
Communication Module Overview . . . 5–7
Module Installation – SR55-CM-ENETIP2, SR55-CM-ENETIP and SR55-CM-MODTCP . . . 5–7
SR55 Configuration . . . 5–7
IP Address Configuration . . . 5–7
Communication Module Front Panel Indicator Lights. . . . 5–8
Modbus TCP Network Communications . . . 5–8
EtherNet/IP Network Communications. . . . 5–9
EtherNet/IP Control (SR55-CM-ENETIP2). . . . 5–9
EtherNet/IP Control (SR55-CM-ENETIP) . . . 5–12
EDS File . . . 5–12
Using the IP Configuration Tool (IPconfig) . . . 5–13
Connecting to the SR55-CM-ENETIP2 Module through I/O (Implicit Messaging) . . . 5–17
Connecting to the SR55-CM-ENETIP Module through I/O (Implicit Messaging) . . . 5–20
Connecting to the SR55-CM-ENET Module through Explicit Message: . . . 5–23
Explicit Message Instruction Examples (from Productivity Series CPU) . . . 5–24
Chapter 6: Accessories. . . . 6–1
Optional Accessories. . . . 6–2
Finger Guards. . . . 6–2
Remote Touchscreen . . . 6–3
RJ45 to RJ12 Adapter . . . 6–5
Serial Modbus Communication Splitter . . . 6–5
Communication Modules . . . 6–7
Replacement/Spare Parts . . . 6–10
Replacement Cooling Fans . . . 6–10
Replacement Touchscreen . . . 6–16
Appendix A: Updating Firmware . . . A–1
Updating SR55 Firmware . . . A–2
Appendix B: Soft Starter Application Considerations . . . B–1
B.1 – Motor Suitability and Associated Considerations . . . B–2
B.1.1 – Suitability . . . B–2
B.1.2 – Induction Motor Characteristics . . . B–2
B.1.3 – Rating . . . B–2
B.1.4 – Maximum Motor Cable Length . . . B–3

B.1.5 – Power Factor Correction Capacitors . . . B–3
B.1.6 – Lightly Loaded Small Motors . . . B–3
B.1.7 – Motors Installed with Integral Brakes. . . . B–3
B.1.8 – Older Motors . . . B–3
B.1.9 – Wound-rotor or Slip-ring Motors. . . . B–3
B.1.10 – Enclosures . . . B–3
B.1.11 – Efficiency . . . B–4
B.1.12 – High-Efficiency Motors. . . . B–4
B.1.13 – EU Compliance with the EMC Directive . . . B–4
B.1.14 – Fuses. . . . B–4
B.2 – Rules for Specific Applications . . . B–5
B.2.1 – In-Delta Operation . . . B–5
B.2.2 – High-Inertia Loads . . . B–5
B.2.4 – Resistive Loads . . . B–5
B.2.5 – Frequent Starting. . . . B–5
B.2.6 – Optimizing . . . B–5
B.2.7 – Soft Stopping. . . . B–6
B.2.9 – Replacement of Fluid Couplings . . . B–6
B.2.12 – Overhauling Loads . . . B–6
B.2.13 – Application Table . . . B–6
B.3 – Concepts and Principles of Fixed-Speed Induction Motor Starting and Control . . . B–8
B.3.1 – Introduction . . . B–8
B.3.2 – The Induction Motor. . . . B–8
B.3.3 – Starting Induction Motors. . . . B–10
B.3.4 – Electro-Mechanical Methods Of Starting . . . B–11
B.3.5 – The Semiconductor Motor Controller . . . B–12
B.3.6 – Running Induction Motors . . . B–13
B.3.7 – Reliability Considerations . . . B–14
Appendix B Glossary of Terms. . . . B–15
Appendix C: Electromagnetic Compatibility . . . C–1
C.0 – Electromagnetic Compatibility (EMC) . . . C–2
C.1 – Introduction . . . C–2
C.2 – Applicable Standard Within the EU. . . . C–2
C.3 – Mandatory Requirements Within the EU. . . . C–2
C.4 – Guidance for Installation Personnel and System Designers . . . C–2
C.5 – EMC Basic Criteria . . . C–3
C.6 – Purchasing Implications of Meeting an EMC Standard . . . C–3
C.7 – Basic EMC Considerations. . . . C–4
C.7.1 – Immunity . . . C–4
C.7.2 – Emissions . . . C–4
C.7.3 – Emissions - Harmonics. . . . C–4
C.7.4 – Emissions - Radio Frequency (RF). . . . C–4
C.7.5 – Emissions - Conducted . . . C–5
C.7.6 – Important Systems Information. . . . C–5
C.7.7 – Strategies for Attaining and Maintaining EMC Compliance . . . C–6

Appendix D: Sizing an SR55 Soft Starter *D–1*
SR55 Soft Starter Selection Steps *D–2*
SR55 Soft Starter Overload Trip *D–3*
SR55 Index Ratings *D–3*
Standard Overload Current Profile and Duty Cycle *D–4*
Increased Starts per Hour – Derating *D–5*
Derating Examples *D–6*

Mechanical Installation

Chapter 1

Table of Contents

Chapter 1: Mechanical Installation 1–1
User Manual Overview 1–2
Overview of this Publication 1–2
Who Should Read This Manual 1–2
Supplemental Publications 1–2
Technical Support 1–2
Special Symbols 1–2
Mechanical Installation 1–3
Mounting 1–3
Requirements for an Enclosure 1–3
Enclosure Ventilation 1–3
Mechanical Specifications 1–4
Dimensions 1–4

User Manual Overview

Overview of this Publication

The SR55 Soft Starter User Manual describes the installation, configuration, and methods of operation of the SR55 Soft Starter.

Who Should Read This Manual

This manual contains important information for those who will install, maintain, and/or operate any of the SR55 Soft Starters.

Supplemental Publications

The National Electrical Manufacturers Association (NEMA) publishes many different documents that discuss standards for industrial control equipment. Global Engineering Documents handles the sale of NEMA documents. For more information, you can contact Global Engineering Documents at:

15 Inverness Way East
Englewood, CO 80112-5776
1-800-854-7179 (within the U.S.)
303-397-7956 (international)
www.global.ihs.com

Technical Support

By Telephone: 770-844-4200
(Mon.–Fri., 9:00 a.m.–6:00 p.m. E.T.)

On the Web: www.automationdirect.com

Our technical support group is glad to work with you in answering your questions. If you cannot find the solution to your particular application, or, if for any reason you need additional technical assistance, please call technical support at **770-844-4200**. We are available weekdays from 9:00 a.m. to 6:00 p.m. Eastern Time.

We also encourage you to visit our web site where you can find technical and non-technical information about our products and our company. Visit us at www.automationdirect.com.

Special Symbols

When you see the "notepad" icon in the left-hand margin, the paragraph to its immediate right will be a special note.

When you see the "exclamation mark" icon in the left-hand margin, the paragraph to its immediate right will be a warning. This information could prevent injury, loss of property, or even death (in extreme cases).

Mechanical Installation

Mounting

Mount the soft starter to a flat, vertical surface using the mounting holes (or slots) on its base plate. The dimension drawings, shown in the "Dimensions" subsection of this chapter, give mounting hole positions and overall dimensions for each SR55 model. Ensure that:

- *The orientation of the unit has the "TOP" uppermost, and within the vertical range shown on the dimension drawings. (Mount the unit within 30° of vertical, for both side-to-side and front-to-back dimensions.)*
- *The location allows adequate front access.*
- *You can view and access the touchscreen.*

SR55 soft starters are not intended for mounting in environments containing corrosive gases.

Requirements for an Enclosure

For a typical industrial environment, an enclosure should provide the following:

- *A single location for the unit and its protection/isolation switch gear.*
- *The safe termination of cabling and/or bus bars.*
- *Allow minimum clearance distances around soft starters as specified in the tables shown with the dimension drawings.*
- *Means to effect proper air flow through the enclosure and maintain temperature and humidity within the ranges specified in the Mechanical Specifications table.*

Enclosure Ventilation

Enclosure Ventilation
When fitting SR55 into an enclosure, ventilation must be provided if the heat output of the unit is greater than the enclosure will dissipate. Use the following formula to determine the enclosure fan requirement. An allowance has been incorporated into the formula so that the figure for Q is the air delivery in the fan suppliers data. The power dissipation of the thyristors are at their peak when the SR55 is in energy-saving mode (iERS), therefore causing the most heat generated from the starter. Heat dissipated can be approximated with the formula:
Watts (SR55) = 1/2 x (SR55 current rating) x 3

$Q = (4xW_t) / (T_{max} - T_{amb})$

Q = Volume of air (cubic meters per hour - m^3/h)

W_t = Heat produced by the unit and all other heat sources within the enclosure (Watts)

T_{max} = Maximum permissible temperature within the enclosure (50°C for a fully rated SR55)

T_{amb} = Temperature of the air entering the enclosure (°C) (If you prefer to work in CFM, substitute °F for °C. Q is now in CFM)

Mechanical Specifications

MECHANICAL SPECIFICATIONS – SR55 Series Full-Featured Soft Starters									
Model	***SR55 -017***	***SR55 -021***	***SR55 -027***	***SR55 -034***	***SR55 -040***	***SR55 -052***	***SR55 -065***	***SR55 -077***	***SR55 -096***
Frame Size	1								
Heat Output (W)	25.5	31.5	40.5	51.0	60.0	78.0	97.5	116	144
Weight (lb [kg])	6.6 [3.0]			7.7 [3.5]					
Model	***SR55 -124***	***SR55 -156***	***SR55 -180***	***SR55 -242***	***SR55 -302***	***SR55 -361***	***SR55 -414***	***SR55 -477***	–
Frame Size	2			3					–
Heat Output (W)	186	234	270	363	453	542	621	716	
Weight (lb [kg])	12.1 [5.5]	14.3 [6.5]		35.3 [16.0]			46.7 [21.2]		
Model	***All SR55 models***								
Ambient Operating Temperature	-20°C [-4°F] to 50°C [122°F] ; above 50°C derate linearly by 4% of SR55 I_e per °C to a maximum of 60°C (140°F)								
Transportation and Storage Temperature	-20°C to 60°C [-4°F to 140°F] continuous								
Humidity	max 85% non-condensing, not exceeding 50% @ 40°C [104°F]								
Maximum Altitude	1,000m [3281ft] ; above 1000m derate by 1% of SR55 I_e per 100m (328ft) to a maximum altitude of 2,000m (6562ft)								
Environmental Rating	Main Circuit: IP00 (IP20 with optional finger guards for sizes 1&2 only); Control Circuit: IP20; No corrosive gases permitted								

Dimensions

(in [mm])

Frame Size 1: SR55-017 – SR55-027

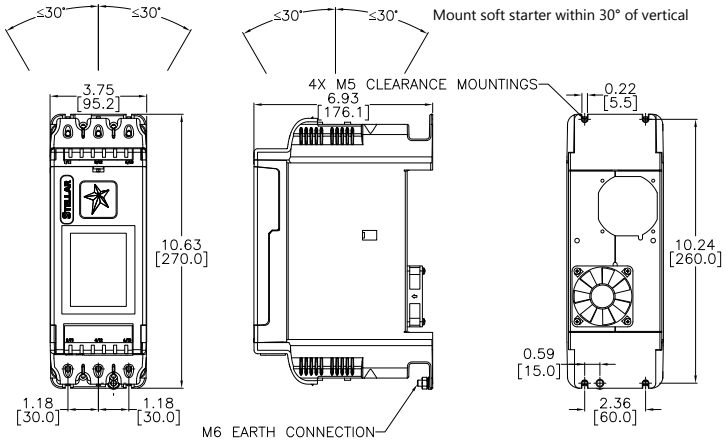

Minimum Clearance Distance	
Top	3in [75mm]
Bottom	
Left	1in [25mm]
Right	
Front	

NOTE: The addition of optional finger guards to size 1 and size 2 SR55 soft starters adds approximately 14mm [0.5in] to the vertical dimension, but does NOT change the clearance distance.

Frame Size 1: SR55-034 – SR55-096

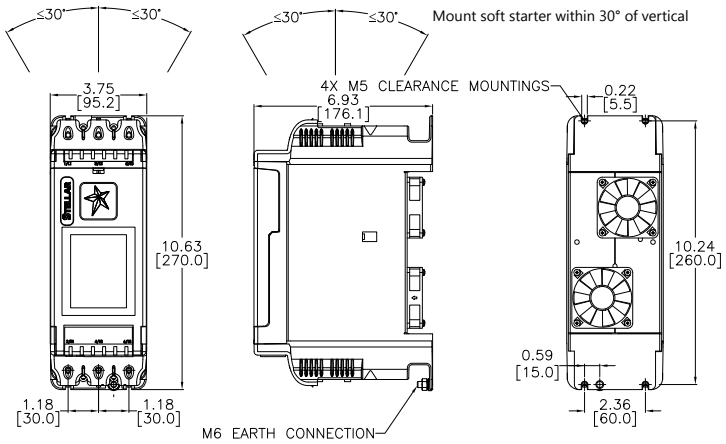

Minimum Clearance Distance	
Top	3in [75mm]
Bottom	
Left	1in [25mm]
Right	
Front	

NOTE: The addition of optional finger guards to size 1 and size 2 SR55 soft starters adds approximately 14mm [0.5in] to the vertical dimension, but does NOT change the clearance distance.

Dimensions (in [mm]) (continued)

Frame Size 2: SR55-124 – SR55-180

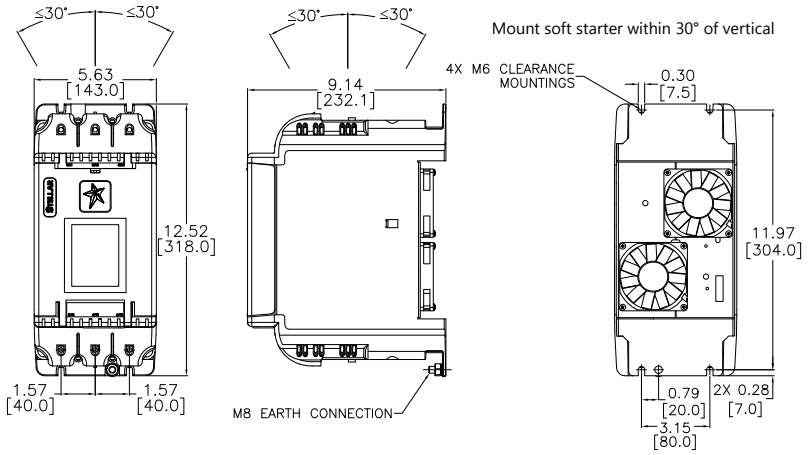

Minimum Clearance Distance	
Top	3.9 in [100mm]
Bottom	
Left	1.6 in [40mm]
Right	
Front	1in [25mm]

NOTE: The addition of optional finger guards to size 1 and size 2 SR55 soft starters adds approximately 14mm [0.5in] to the vertical dimension, but does NOT change the clearance distance.

Frame Size 3: SR55-242 – SR55-361

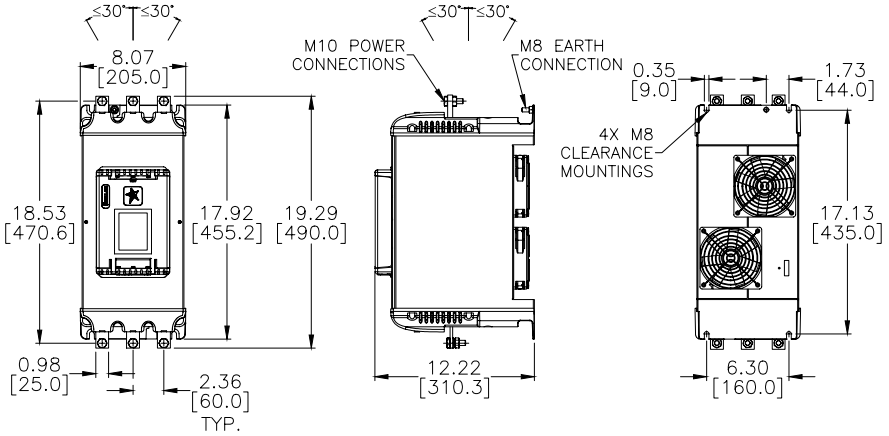

Minimum Clearance Distance	
Top	4.9 in [125mm]
Bottom	
Left	2.4 in [60mm]
Right	
Front	1in [25mm]

Frame Size 3: SR55-414 – SR55-477

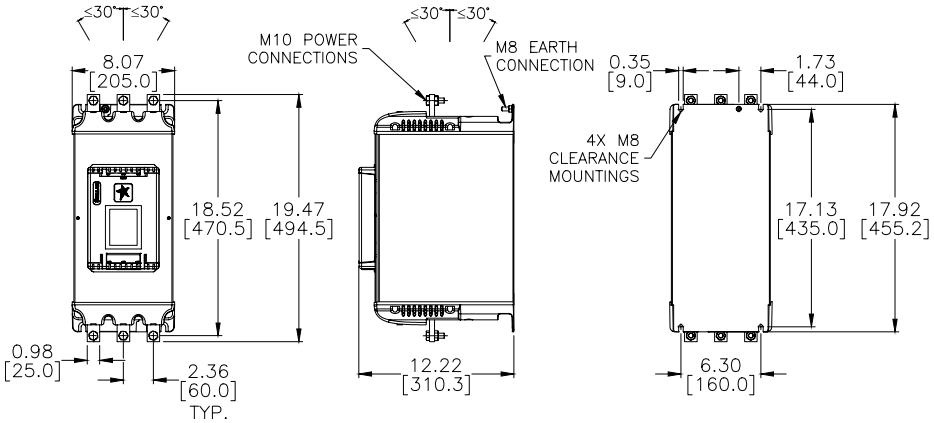

Minimum Clearance Distance	
Top	4.9 in [125mm]
Bottom	
Left	2.4 in [60mm]
Right	
Front	1in [25mm]

BLANK
PAGE

Electrical Installation

Chapter 2

Table of Contents

Chapter 2: Electrical Installation. 2–1
- Safety Warning. 2–2
- Agency Approvals 2–2
- Technical Information and Standards 2–2
- Electrical Specifications 2–3
- Circuit Protection 2–4
  - Short-Circuit Protection 2–4
  - Motor overload Protection 2–5
- Wire Sizes and Torques 2–5
- Electrical Connections. 2–6
- Electrical Wiring 2–7
  - Power Circuit Wiring. 2–7
  - Control Circuit Wiring 2–8

Safety Warning

SR55 soft starters contain dangerous voltages when connected to the electrical power supply. Only qualified personnel who have been completely trained and authorized should carry out installation, operation and maintenance of this equipment. Refer to and carefully follow all of the warnings in the "Warnings" section at the start of this user manual, as well as other warnings and notes throughout the manual.

Agency Approvals

All SR55 models are CE, REACH, and RoHS compliant. SR55 models -017 through -361 bear the ETL listing mark and are UL508 and CSA C22.2 No. 14, per ETL, listed to U.S. and Canadian safety standards respectively.

SR55 Soft Starter Agency Approvals	
SR55 Models	***Applicable Agency Approvals ****
SR55-017 through SR55-361	CE, CSA C22.2 No.14 (ETL tested), ETL 4004274, REACH, RoHS, UL508 (ETL tested)
SR55-414 through SR55-477	CE, REACH, RoHS
** To obtain the most current agency approval information, see the Agency Approval Checklist section on the specific part number's web page.*	

Technical Information and Standards

SR55 Technical Information and Standards			
Rated Operational Voltages	U_e	200VAC to 480VAC	
Rated Operational Current	I_e	See Electrical Specifications table	
Rating Index		SR55-017 to -180	I_e: AC-53a: 3.5-17: 90-5
		SR55-242 to -477	I_e: AC-53a: 3.5-17: 90-3
Rated Frequency		50 to 60Hz	
Rated Duty		Uninterrupted	
IEC 60947-4-2 Form Designation		Form 1 internally bypassed	
Rated Insulation Voltage	U_i	480V	
Rated Impulse Withstand Voltage	U_{imp}	Main circuit	4kV
		Control supply circuit	2.5 kV
IP Code		Main AC line/load circuit	IP00 (IP20 with optional finger guards SR55-FG-x)
		Supply and control circuit	IP20
Pollution Degree		2	
Rated conditional short-circuit current and type of coordination with associated short-circuit protective device (SCPD).		Type 1 coordination. See short-circuit protection table for rated conditional short-circuit current and required current rating and characteristics of the associated SCPD.	
Rated Control Circuit Voltage (programmable)	U_C	24VDC, 110VAC or 230VAC	Protect with 4A UL Listed fuse
Rated Control Supply Voltage	U_S	See Electrical Specifications table	
Relay Specification		AC-15 230VAC, 1A	
		DC-13 30VDC, 0.7A	
EMC Emission Levels	***EN 55011***	Class A	
EMC Immunity Levels	***IEC 61000-4-2***	8kV/air discharge or 4kV/contact discharge	
	IEC 61000-4-3	10 V/m	
	IEC 61000-4-4	2kV/5kHz (main power and ports)	
		1kV/5kHz (signal ports)	
	IEC 61000-4-5	2kV line-to-ground	
		1kV line-to-line	
	IEC 61000-4-6	10V	

Electrical Specifications

ELECTRICAL SPECIFICATIONS – SR55 Series Full-Featured Soft Starters									
Model	***SR55 -017***	***SR55 -021***	***SR55 -027***	***SR55 -034***	***SR55 -040***	***SR55 -052***	***SR55 -065***	***SR55 -077***	***SR55 -096***
Frame Size	***1***								
Rated Current [UL FLC] (A)	17	21	27	34	40	52	65	77	96
Rated Operational Voltage	200VAC to 480VAC								
Motor Rating @ 200V (hp)	3	5	7.5	10	10	15	20	20	30
Motor Rating @ 208V (hp)	5	5	7.5	10	10	15	20	25	30
Motor Rating @ 230V (hp)	5	5	7.5	10	10	15	20	25	30
Motor Rating @ 460V (hp)	10	15	20	25	30	40	50	60	75
Trip Class	programmable 10 to 30								
Index Rating [per IEC 60947-4-2]	I_e: AC-53a: 3.5–17: 90–5								
Impulse Withstand Voltage	4kV								
Insulation Voltage Rating	480V								
Short-Circuit Current Rating (type 1)	5kA							10kA	
Control Power Consumption	60W inrush to latch internal bypass relays; 4W steady state								
Control Voltage Range	24VDC +10%-15% or 110–230 VAC +10%-15%								
Control Fuse (external)	4A								
Control Inputs	(3) DI @ 24VDC, 110VAC, or 230 VAC; (1) PTC Thermistor; (1) AI @ 0–10VDC 10mA max or 4–20mA								
Control Outputs	(3) N/O relay and (1) N/C relay @ 30VDC 0.5A / 230VAC 1A resistive; (1) AO @ 0–10VDC 10mA max or 4–20mA								
Start Time Setting Range	1 to 300 seconds								
Start Voltage Setting Range	10% to 100%								
Stop Time Setting Range	0 to 300 seconds								
Model	***SR55 -124***	***SR55 -156***	***SR55 -180***	***SR55 -242***	***SR55 -302***	***SR55 -361***	***SR55 -414***	***SR55-477***	
Frame Size	***2***			***3***					
Rated Current [UL FLC] (A)	124	156	180	242	302	361	414	477	
Rated Operational Voltage	200VAC to 480VAC								
Motor Rating @ 200V (hp)	40	50	60	75	100	125	150	150	
Motor Rating @ 208V (hp)	40	50	60	75	100	125	150	150	
Motor Rating @ 230V (hp)	40	60	60	75	100	150	150	150	
Motor Rating @ 460V (hp)	100	125	150	200	250	300	350	400	
Trip Class	programmable 10 to 30								
Index Rating [per IEC 60947-4-2]	I_e: AC-53a: 3.5–17: 90–5			I_e: AC-53a: 3.5–17: 90–3					
Impulse Withstand Voltage	4kV								
Insulation Voltage Rating	480V								
Short-Circuit Current Rating (type 1)	10kA			18kA					
Control Power Consumption	60W inrush to latch internal bypass relays; 4W steady state						120W inrush; 4W steady state		
Control Voltage Range	24VDC +10%-15% or 110–230 VAC +10%-15%						110VAC +10%-15%		
Control Fuse (external)	4A								
Control Inputs	(3) DI @ 24VDC, 110VAC, or 230 VAC; (1) PTC Thermistor; (1) AI @ 0–10VDC 10mA max or 4–20mA								
Control Outputs	(3) N/O relay and (1) N/C relay @ 30VDC 0.5A / 230VAC 1A resistive; (1) AO @ 0–10VDC 10mA max or 4–20mA								
Start Time Setting Range	1 to 300 seconds								
Start Voltage Setting Range	10% to 100%								
Stop Time Setting Range	0 to 300 seconds								

Circuit Protection

Short-Circuit Protection

External Short-Circuit Protection Required for SR55											
SR55 Model Number			***SR55 -017***	***SR55 -021***	***SR55 -027***	***SR55 -034***	***SR55 -040***	***SR55 -052***	***SR55 -065***	***SR55 -077***	***SR55 -096***
Rated Operational Current	***UL FLC***	***(A)***	17	21	27	34	40	52	65	77	96
	IEC I_e	***(A)***	17	22	29	35	41	55	66	80	100
Semiconductor Fuse (class aR) #1	***Type***		Mersen 6,9 URD 30xx Bussmann 170M30xx Bussmann 170M31xx Bussmann 170M32xx SIBA 20 61xx								
	Rating	***(A)***	100	100	160	160	160	200	200	250	315
Class J High-Speed Current-Limiting Fuse #2	***Rating Z_1***	***(A)***	30	45	60	70	90	110	125	150	175
Class J Time-Delay Fuse #3	***Rating Z_2***	***(A)***	30	40	50	60	70	100	125	150	175
UL Listed Inverse Time-Delay Circuit Breaker #3	***Rating Z_3***	***(A)***	60	60	60	60	60	150	150	250	300
Rated Conditional Short-Circuit Current	***I_q***	***(kA)***	5							10	
SR55 Model Number			***SR55 -124***	***SR55 -156***	***SR55 -180***	***SR55 -242***	***SR55 -302***	***SR55 -361***	***SR55 -414***	***SR55 -477***	**–**
Rated Operational Current	***UL FLC***	***(A)***	124	156	180	242	302	361	414	477	–
	IEC I_e	***(A)***	132	160	195	242	302	361	430	500	
Semiconductor Fuse (class aR) #1	***Type***		Mersen 6,9 URD 31xx Bussmann 170M40xx Bussmann 170M41xx Bussmann 170M42xx SIBA 20 61xx			Mersen 6,9 URD 33xx Bussmann 170M60xx Bussmann 170M61xx Bussmann 170M62xx SIBA 20 63xx					
	Rating	***(A)***	400	550	550	700	800	900	1000	1100	
Class J High-Speed Current-Limiting Fuse #2	***Rating Z_1***		250	350	400	500	600	600	n/a		
Class J Time-Delay Fuse #3	***Rating Z_2***	***(A)***	225	300	350	450	500	500	600	600	
UL Listed Inverse Time-Delay Circuit Breaker #3	***Rating Z_3***	***(A)***	350	450	500	700	800	1000	1000	1000	
Rated Conditional Short-Circuit Current	***I_q***	***(kA)***	10			18					

#1 Correctly selected semiconductor fuses can provide additional protection against damage to the SR55 unit (this is sometimes referred to as type 2 coordination). These semiconductor fuses are recommended to provide this increased protection.

#2 Suitable for use in a circuit capable of delivering not more than I_q rms Symmetrical Amperes, when protected by Class J high-speed current-limiting 600V rated fuses with a maximum trip rating of Z_1 (IEC Type 1 coordination short-circuit protection).

#3 Suitable for use in a circuit capable of delivering not more than I_q rms Symmetrical Amperes, 480 Volts maximum, when protected by Class J time-delay fuses with a maximum rating of Z_2, or by a circuit breaker with an interrupting rating not less than Z_3 rms Symmetrical Amperes, 480 Volts maximum as in table.

Motor overload Protection

The SR55 soft starter provides full motor overload protection, which can be configured through the touch screen. Overload trip settings are determined by the Motor Current setting and the Trip Class setting. Trip class choices are Class 10, Class 20, and Class 30. The SR55 soft starters are protected using full I^2T motor overload with memory.

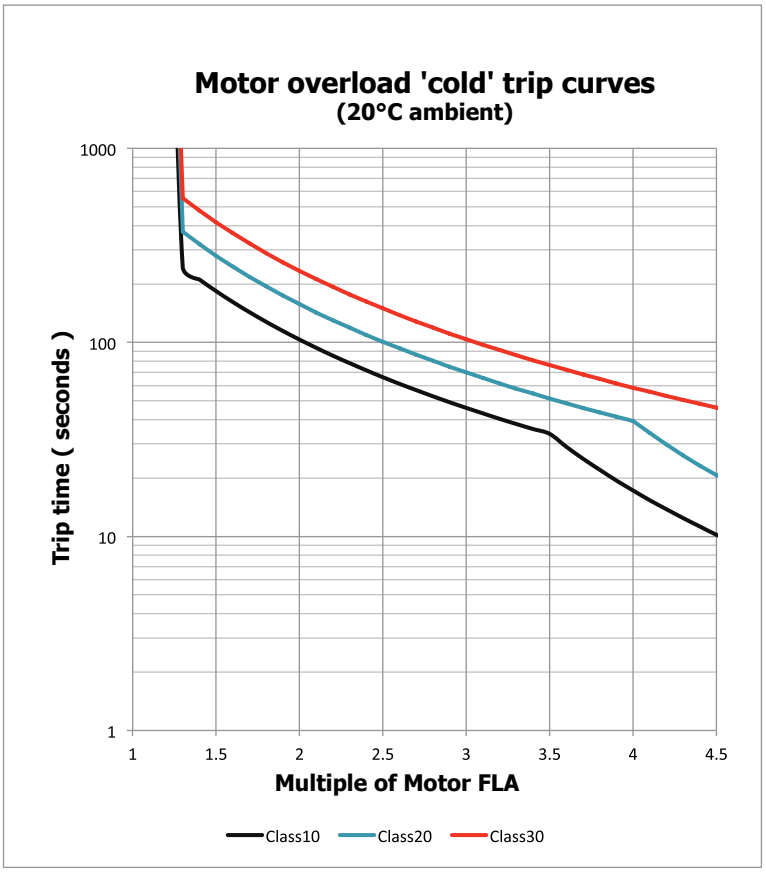

Wire Sizes and Torques

SR55 Wire Sizes and Torques						
Terminal		***Models***	***Wire Size***		***Torque***	
			mm²	***AWG***	***N·m***	***lb·in***
Main Terminals Cu STR 75°C Only	***Terminal***	***SR55-017 to SR55-096***	2.5–70	12–2/0	9	80
		SR55-124 to SR55-180	4–185	12–350 MCM	14	123
	M10 bolt	***SR55-242 to SR55-361***	2 x 95	2 x 2/0		
		SR55-414 to SR55-477	2 x 150	2 x 350 MCM		
Control Terminals		***all models***	0.2–1.5	24–16	0.5	4.5
⏚ ***Protective Ground * Cu Only***	***M6 stud***	***SR55-017***	≥ 4	≥ 12	8	70
		SR55-021 to SR55-052	≥ 6	≥ 10		
		SR55-065 to SR55-096	≥ 10	≥ 8		
	M8 stud	***SR55-124 to SR55-180***	≥ 16	≥ 6	12	105
		SR55-242	≥ 25	≥ 4		
		SR55-302 to SR55-361	≥ 35	≥ 3		
		SR55-414 to SR55-477	≥ 35	≥ 2		
** Protective Ground wire size based on bonding conductor requirements of UL508 and UL508A*						

Electrical Connections

⚠	Required Rating	Pro-gram-mable	Default	Descrip-tion	Control Terminals				Descrip-tion	Default	Pro-gram-mable	Required Rating	⚠
#1	–	–	–	group 1 input common		D1COM	11		group 1 relay common	–	–	–	–
#1	24VDC or 110VAC or 230VAC +10% -15%	yes	start / stop	opto-coupled input		D1-1I	12		relay N/C	fault	yes	230VAC 1A AC15; 30VDC 0.5A Resistive	–
#1	24VDC or 110VAC or 230VAC +10% -15%	yes	none	opto-coupled input		D1-2I	24		relay N/O	fault	yes	230VAC 1A AC15; 30VDC 0.5A Resistive	–
#2	–	–	–	group 2 input common		D2COM	33		group 2 relay common	–	–	–	–
#2	24VDC or 110VAC or 230VAC +10% -15%	yes	reset	opto-coupled input		D2-1I	34		relay N/O	running	yes	230VAC 1A AC15; 30VDC 0.5A Resistive	–
–	–	–	–	not used			44		relay N/O	end of start	yes	230VAC 1A AC15; 30VDC 0.5A Resistive	–
–	3 x PTC in series (130°C)	–	OFF	thermistor		PTC+	AO		analog output	0–10V	yes	0 to 10V 10mA / 4-20mA	–
–	3 x PTC in series (130°C)	–	OFF	thermistor		PTC–	ACOM		analog 0V	–	–	0V	–
–	–	–	–	signal ground		⏚	AI		analog input	0–10V	yes	0 to 10V 10mA / 4-20mA	–
#3	110VAC–230VAC +10% -15%	–	–	control supply		N (110–230 VAC)	0VDC		0V input	–	–	0V	#3
#3	110VAC–230VAC +10% -15%	–	–	control supply		L (110–230 VAC)	24VDC		24V input	–	–	24VDC +10% -15%	#3

* *<u>24VDC Specification</u>: 24VDC 60W; Residual ripple 100mV; Spikes/switching Peaks 240mV; Turn On/Off response; No overshoot of V out; Overvoltage voltage protection output voltage must be clamped to <30Vdc*

⚠	
#1	*The programmed digital input setting on D1COM, D1-1I, D1-2I <u>must</u> correspond to the voltage applied to these terminals to avoid risk of damage to the equipment.*
#2	*The programmed digital input setting on D2COM, D2-1I <u>must</u> correspond to the voltage applied to these terminals to avoid risk of damage to the equipment.*
#3	*The control supply can be 110 to 230VAC applied to the N, L terminals <u>or</u> 24VDC applied to the 0VDC, 24V input terminals. The correct voltage as specified must only be applied to one of these supply inputs to avoid risk of damage to the equipment.*

Electrical Wiring

Power Circuit Wiring

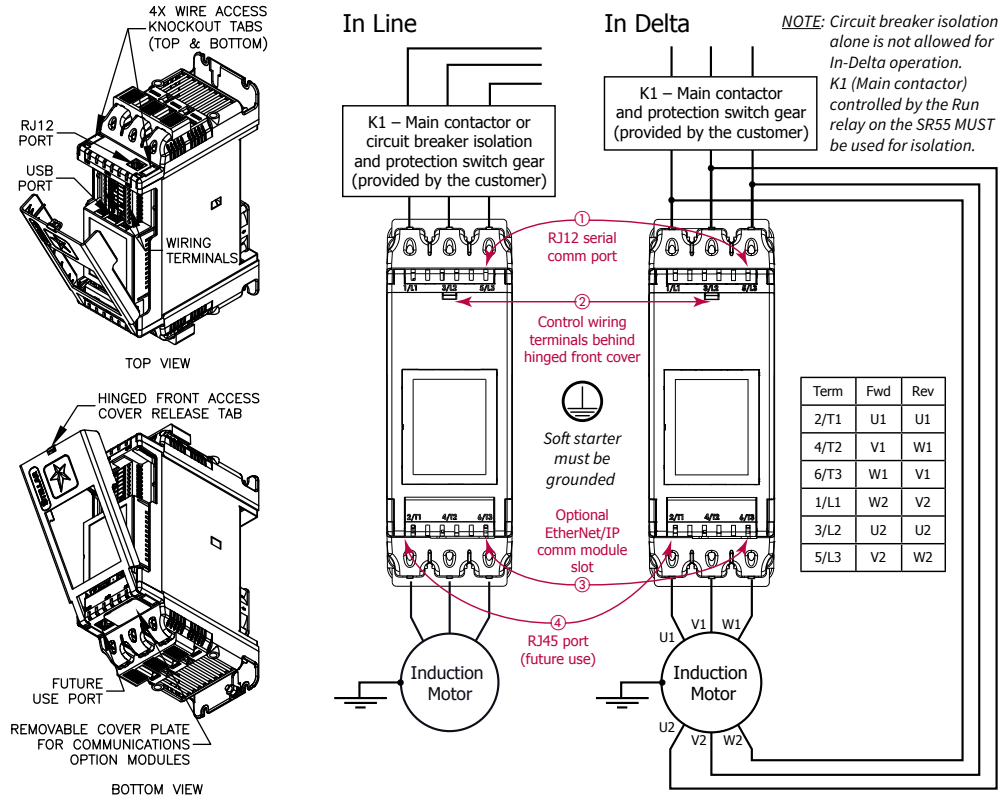

For wire size and torque requirements, refer to the "Wire Sizes and Torques" section of this chapter.

For suitable short-circuit protection devices (SCPDs), refer to the "Circuit Protection" section of this chapter.

***In Delta Wiring:** For this configuration, applying the following equation allows the use of a lower current-rated SR55 than the motor FLC: SR55 IE = IE (motor) / √3.*
When In-Delta configuration is used, a line contactor controlled by the SR55 MUST be used with the In-Delta Firing Mode selected in the advanced menu.
The SR55 starter does not offer iERS optimization when connected In-Delta.

Do not place bypass contactors around the starter. The starter has built in bypass contactors. If an external bypass contactor is desired in order to allow emergency across the line starting in case of an SR55 failure, then the load side of the starter wiring MUST be disconnected in order to protect the starter.

Control Circuit Wiring

*1) The programmed digital input settings for **D1COM, D1-1I, D1-2I,** and **D2COM, D2-1I** must correspond to the voltage applied to these terminals to avoid risk of damage to the equipment.*

*2) The control supply can be **110** to **230VAC** applied to the **N, L** terminals or **24VDC** applied to the **0VDC, 24V** input terminals. The correct voltage as specified must only be applied to one of these supply inputs to avoid risk of damage to the equipment.*

Three-Wire Control

3-Wire Control Diagram
110/230VAC control supply
and digital input programming

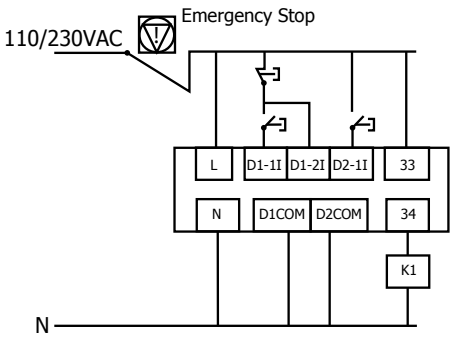

24VDC control supply and
digital input programming

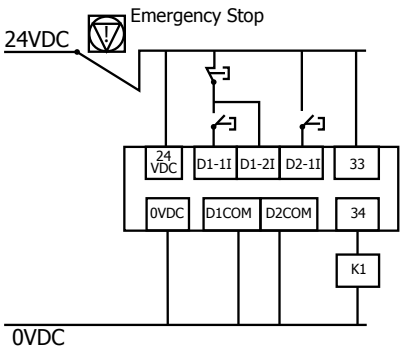

Digital Input Configuration
D1-1I = Start
D1-2I = Stop
D2-1I = Reset

Digital Output Configuration
34 = DO3 set to "Running" (This pulls in the line contactor, K1, before the ramp starts)

Power factor correction capacitors must not be positioned between the soft starter and the motor, or there is a risk of damaging the thyristors due to current peaks.*

User-Programmable Control

User Programmable Control Diagram

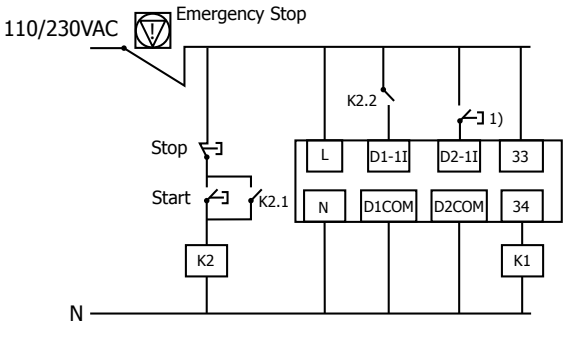

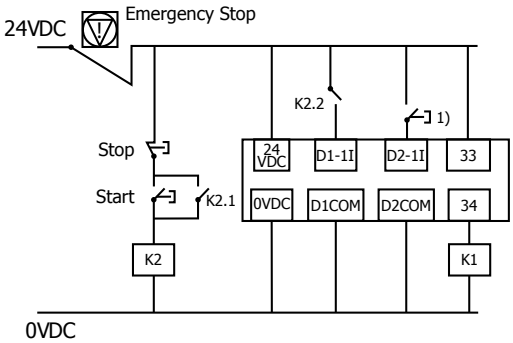

1) Optional high reset. If this reset is required, ensure that "User Programmable" is selected as the control method menu found in the Digital Inputs menu. If you would prefer the reset to work by removing and reapplying the Start Signal on D1-1I then select "Two wire control" in the control method menu.

Digital Input Configuration
D1-1I = High Start / Low Stop
D1-2I = None
D2-1I = High Reset

Digital Output Configuration
34 = DO3 set to "Running" (This pulls in the line contactor, K1, before the ramp starts)

**Note: Power factor correction capacitors (PFCs) can reduce a facility's kVAR charges in some cases. Determining the need for, and location of, PFCs should be performed by a qualified engineer (from your utility company or a power quality engineering firm). PFCs cannot be located between the SR55 and the motor.*

Reversing Wiring Diagram

Reversing Wiring Diagram

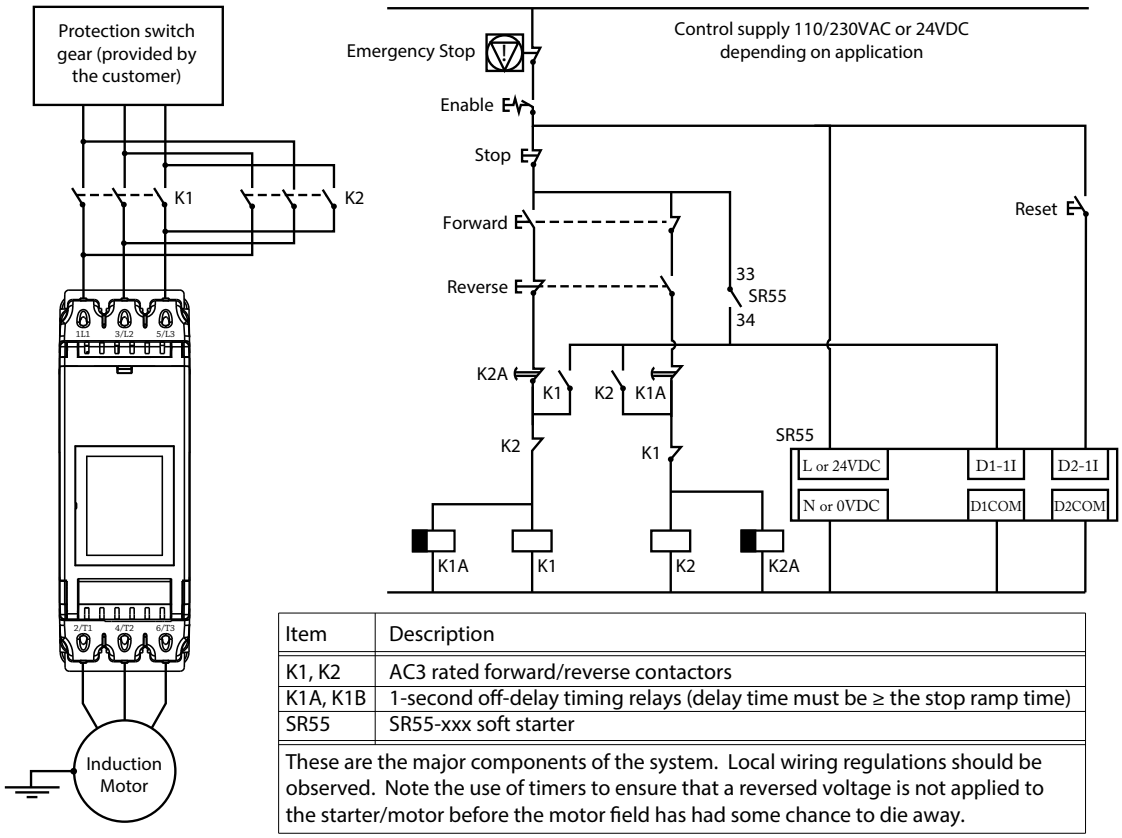

Item	Description
K1, K2	AC3 rated forward/reverse contactors
K1A, K1B	1-second off-delay timing relays (delay time must be ≥ the stop ramp time)
SR55	SR55-xxx soft starter
These are the major components of the system. Local wiring regulations should be observed. Note the use of timers to ensure that a reversed voltage is not applied to the starter/motor before the motor field has had some chance to die away.	

Note: Forward and reverse buttons must remain pressed for longer than timer change over period.
- *"Stop" must be pressed before direction reversal can be initiated.*
- *Digital Output 3 must be configured to "Running."*
- *Digital Input 1 must be configured to "High Start / Low Stop."*
- *Digital Input 2 must be configured to "Reset."*

BLANK
PAGE

Configuration and Parameters

Chapter 3

Table of Contents

Chapter 3: Configuration and Parameters . . . 3–1
"Heartbeat" LED . . . 3–2
Configuration Overview. . . . 3–2
Auto Setup Procedure. . . . 3–2
Setup by Individual Parameter Settings . . . 3–2
Configuration From Touchscreen. . . . 3–2
Auto Setup Procedure from Touchscreen . . . 3–2
Individual Parameter Settings from Touchscreen . . . 3–2
Touchscreen Pictorial Example – Auto Setup . . . 3–3
Auto Setup Procedure – Parameter Settings . . . 3–4
Auto Reset Function. . . . 3–6
Mapping Auto Reset Status to Digital Outputs . . . 3–8
Parameter Summary. . . . 3–15
Summary of Parameters Not Configurable Through Touchscreen Menu . . . 3–15
Summary of Parameters for Auto Setup. . . . 3–15
Summary of Parameters for Individual Parameter Setup. . . . 3–16
Block Transfer Parameters. . . . 3–24
Parameter Details . . . 3–25
Parameters **Not** Configurable Through Touchscreen Menu . . . 3–25
Parameters in Sequence and Grouped by Touchscreen Navigation. . . . 3–30
"Auto Setup" Menu of Parameters . . . 3–30
"Advanced" Menu of Parameters . . . 3–32
"I/O" Menu of Parameters. . . . 3–54
"Monitor" Menu of Parameters. . . . 3–63
"Log" Menu of Parameters . . . 3–69
"Device" Menu of Parameters. . . . 3–88
"Auto Reset" Menu of Parameters . . . 3–94
Trip Code Descriptions . . . 3–101
Fail Safe Codes. . . . 3–103
Main Board Trip (2402 – 2436) . . . 3–103
Touchscreen Trip (2501 – 2581). . . . 3–103
Logging Trip (2601 – 2603) . . . 3–104
Fail Safe Trip Codes . . . 3–104
Saving and Loading an SR55 Configuration File . . . 3–105

"Heartbeat" LED

The Stellar logo LED on the SR55 front panel will blink once every 10 seconds to let the user know that all microprocessors in the soft starter are operating properly.

Configuration Overview

Configuring the SR55 soft starters for use is as simple as setting the parameters to match your motor, application, power source, etc.

You can configure the SR55 from its touchscreen, from an optional remote touchscreen, or from a PLC using Modbus RTU via the onboard RJ12 port or connected through an optional EtherNet/IP or Modbus TCP communication module.

Auto Setup Procedure

Choose this setup method if you want to quickly change all of the parameters at once to settings that are typical for your general application. You can then adjust some parameters as necessary to fine tune the settings for your specific application.

Setup by Individual Parameter Settings

Choose this setup method if you want to change the parameter settings yourself one at a time. The individual parameters are grouped by categories as you scroll through the touchscreen menu.

Configuration From Touchscreen

Simply touch the on-screen buttons to enter data or to scroll through the SR55 setup menu, using the intuitive "Up," Dn," "BACK," and "NEXT" buttons as necessary. From the home "Menu" screen, select either "Auto Setup" or "Advanced."

The resistive touchscreen requires localized pressure to activate a button and works best if you gently use a blunt stylus-type object to make on-screen selections.

Warning: Do not use a sharp object and/or excessive force to make touchscreen selections, or you may damage the touchscreen.

Auto Setup Procedure from Touchscreen

The "Setup Wizard" menu is displayed only the first time the SR55 is powered up. If you are ready to set parameters on the first power-up, select "Auto" from the on-screen Setup Wizard menu, and then follow the on-screen prompts. Refer to the Auto Setup Touchscreen Pictorial Example on the following page.

To set up your parameters following a subsequent start-up of your SR55, select the "Home" menu from the "Status" screen on the touchscreen, choose "Auto Setup," and then follow the on-screen prompts. Refer to the Auto Setup Touchscreen Pictorial Example on the following page.

Individual Parameter Settings from Touchscreen

From the initial "Setup Wizard" or from the Home Menu, choose the "Advanced" parameters and other parameter categories as required for your particular application. Refer to the "Parameter Summary" and "Parameter Details" sections of this chapter for more details.

Touchscreen Pictorial Example – Auto Setup

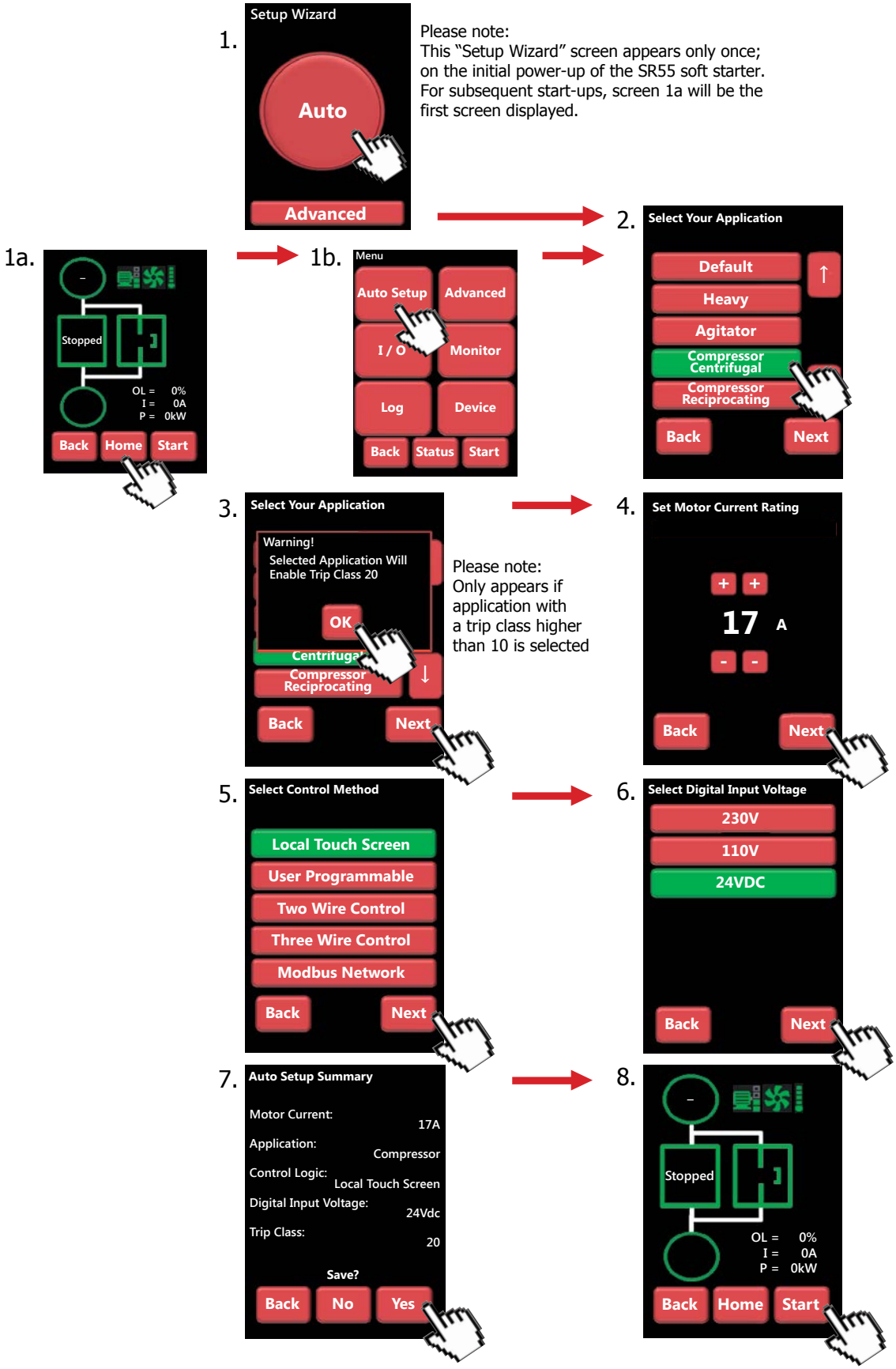

Auto Setup Procedure – Parameter Settings

Choose “Auto” setup from the “Setup Wizard” or from the “Home” menu, and set the following parameter groups:

1) Application
2) Motor Current Rating
3) Control Method
4) Digital Input Voltage

The SR55 will automatically set the rest of the parameters as shown in the following table:

Auto Setup Parameter Settings

#	Application	Start pedestal	Stop pedestal	Start time	Soft stop time	Trip Class	Current limit level	Current limit time	Optimize rate	Auto pedestal	Auto End Start 2	Auto End Start 1	Auto End 3	Delta Operation	Auto stop	Soft stop smoothing	spare	Auto ramp	Auto end stop	Impact load	Current limit - stopping	Current limit time - stopping
–	Unit	%	%	s	s	–	FLC	s	–	En	En	En	En	En	En	En	En	En	En	En	FLC	s
0	Default	20	10	10	0	10	3.5	30	5	0	0	0	1	1	0	0	0	0	0	0	8	2
1	Heavy	40	10	10	0	20	4	40	5	1	0	1	1	1	0	0	0	0	0	0	8	2
2	Agitator	30	10	10	0	10	3.5	25	5	1	0	1	1	1	0	0	0	0	0	0	8	2
3	Compressor - Centrifugal	35	10	15	0	20	3.5	25	5	1	0	1	1	1	0	0	0	0	0	0	8	2
4	Compressor - Reciprocating	45	10	15	0	20	3.5	25	15	1	0	1	1	1	0	0	0	0	0	0	8	2
5	Compressor - Screw	40	10	15	0	20	3.5	25	5	1	0	1	1	1	0	0	0	0	0	0	8	2
6	Compressor - Vane	35	10	7	0	10	3.5	25	5	1	0	1	0	1	0	0	0	0	0	0	8	2
7	Compressor - Scroll	35	10	7	0	10	3.5	25	15	1	0	1	0	1	0	0	0	0	0	0	8	2
8	Ball mill	40	10	10	0	20	5.5	25	5	1	0	1	0	1	0	0	0	0	0	0	8	2
9	Centrifuge	40	10	10	0	30	2.5	300	5	1	0	1	0	1	0	0	0	0	0	0	8	2
10	Bow Thruster - Zero Pitch	10	10	10	0	10	2.5	25	5	1	1	0	1	1	0	0	0	0	0	0	8	2
11	Bow Thruster - Loaded	10	10	10	0	20	4	25	5	1	1	0	1	1	0	0	1	0	0	0	8	2
12	Conveyor - Unloaded	10	10	10	7	10	3.5	30	5	1	0	1	0	1	1	1	1	0	1	0	2	10
13	Conveyor - Loaded	10	10	10	7	20	5.5	30	5	1	0	1	0	1	1	1	0	0	1	0	2	10
14	Crusher	40	10	10	0	30	3.5	60	5	1	0	1	0	1	0	0	0	0	0	0	8	2
15	Fan - Low Inertia	30	10	15	0	10	3.5	30	5	1	0	1	0	1	0	1	0	0	0	0	8	2
16	Fan - High Inertia	40	10	10	0	30	3.5	60	5	1	0	1	0	1	0	0	0	0	0	0	8	2
17	Feeder - screw	20	10	10	0	10	3.5	25	5	1	0	1	0	1	0	0	0	0	0	0	8	2
18	Grinder	40	10	10	0	20	3.5	40	5	1	0	1	0	1	0	0	0	0	0	0	8	2
19	Hammer mill	40	10	10	0	20	3.5	40	5	1	0	1	0	1	0	0	0	0	0	0	8	2
20	Lathe machines	10	10	15	0	10	3.5	25	5	1	0	1	0	1	0	0	0	0	0	0	8	2
21	Mills - flour Etc	40	10	10	0	20	3.5	40	5	1	0	1	0	1	0	0	0	0	0	0	8	2
22	Mixer - Unloaded	10	10	10	0	10	3.5	25	5	1	0	1	0	1	0	0	0	0	0	0	8	2
23	Mixer - Loaded	10	10	10	0	20	4	25	5	1	0	1	0	1	0	0	0	0	0	0	8	2
24	Moulding Machine	10	10	10	0	10	4.5	25	5	1	0	1	0	1	0	0	0	0	0	1	8	2
25	Pelletisers	40	10	10	0	20	5.5	25	5	1	0	1	0	1	0	0	0	0	0	0	8	2
26	Plastic and textile machines	10	10	10	0	10	4.5	25	5	1	0	1	0	1	0	0	1	0	0	1	8	2
27	Press, flywheel	40	10	10	0	20	3.5	40	5	1	0	1	0	1	0	0	1	0	0	1	8	2
28	Pump - Submersible Centrifugal	10	10	10	60	10	3.5	25	5	1	0	0	0	1	1	1	1	0	1	0	2	25

Auto Setup Parameter Settings (continued from previous page)																						
#	Application	Start pedestal	Stop pedestal	Start time	Soft stop time	Trip Class	Current limit level	Current limit time	Optimize rate	Auto pedestal	Auto End Start 2	Auto End Start 1	Auto End 3	Delta Operation	Auto stop	Soft stop smoothing	spare	Auto ramp	Auto end stop	Impact load	Current limit - stopping	Current limit time - stopping
–	Unit	%	%	s	s	–	FLC	s	–	En	En	En	En	En	En	En	En	En	En	En	FLC	s
29	Pump - Submersible Rotodynamic	10	10	10	60	10	3.5	25	5	1	0	0	0	1	1	1	1	0	1	0	2	25
30	Pump - Positive displacement Reciprocating	10	10	10	60	20	3.5	25	15	1	0	0	0	1	1	1	0	0	1	0	2	25
31	Pump - Positive displacement Rotary	10	10	10	60	20	3.5	25	15	1	0	0	0	1	1	1	0	0	1	0	2	25
32	Pump Jack	40	10	10	0	20	3.5	40	5	1	0	1	0	1	0	0	0	0	0	1	8	2
33	Rolling mill	40	10	10	0	20	3.5	40	5	1	0	1	0	1	0	0	0	0	0	0	8	2
34	Roots Blower	30	10	10	0	20	4.5	25	5	1	0	1	0	1	0	0	0	0	0	0	8	2
35	Saw - Band	10	10	10	0	10	3.5	25	5	1	0	1	0	1	0	0	0	0	0	0	8	2
36	Saw - Circular	40	10	10	0	20	3.5	40	5	1	0	1	0	1	0	0	0	0	0	0	8	2
37	Screen - vibrating	40	10	10	0	20	4.5	40	5	1	0	1	0	1	0	0	0	0	0	0	8	2
38	Shredder	40	10	10	0	30	3.5	60	5	1	0	1	0	1	0	0	0	0	0	0	8	2
39	Transformers, voltage regulators	10	10	5	0	10	3.5	25	5	0	0	0	0	1	0	0	0	0	0	0	8	2
40	Tumblers	20	10	10	0	20	4	25	5	1	0	1	0	0	0	0	0	0	0	0	8	2
41	Wood chipper	40	10	10	0	30	3.5	60	5	1	0	1	0	0	0	0	0	0	0	0	8	2

Auto Reset Function

The Auto Reset function automatically resets a selected number of faults and then attempts a start without user intervention. The time between the resets and the number of reset attempts are both programmable. If the Auto Reset has been successful, the Starter must operate trip free for a set time before the counters are re-initialized. If the number of attempts exceeds the set value, the Auto Reset terminates, and the counters will be re-initialized when the user gives a Reset or Stop signal.

***WARNING:** When Auto Reset is enabled, a tripped motor may restart automatically after the Reset Delay time. This may result in equipment damage or personal injury if the function is used in an unsuitable application. Do not use this function without considering applicable local, national, and international standards, regulations, or industry guidelines.*

The Auto-Reset function is accessible from the Advanced Menu (see Auto Reset section of parameter summaries on page 3–94):

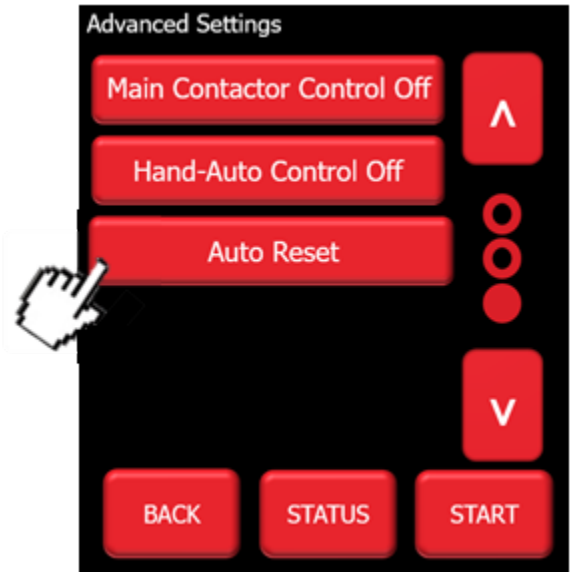

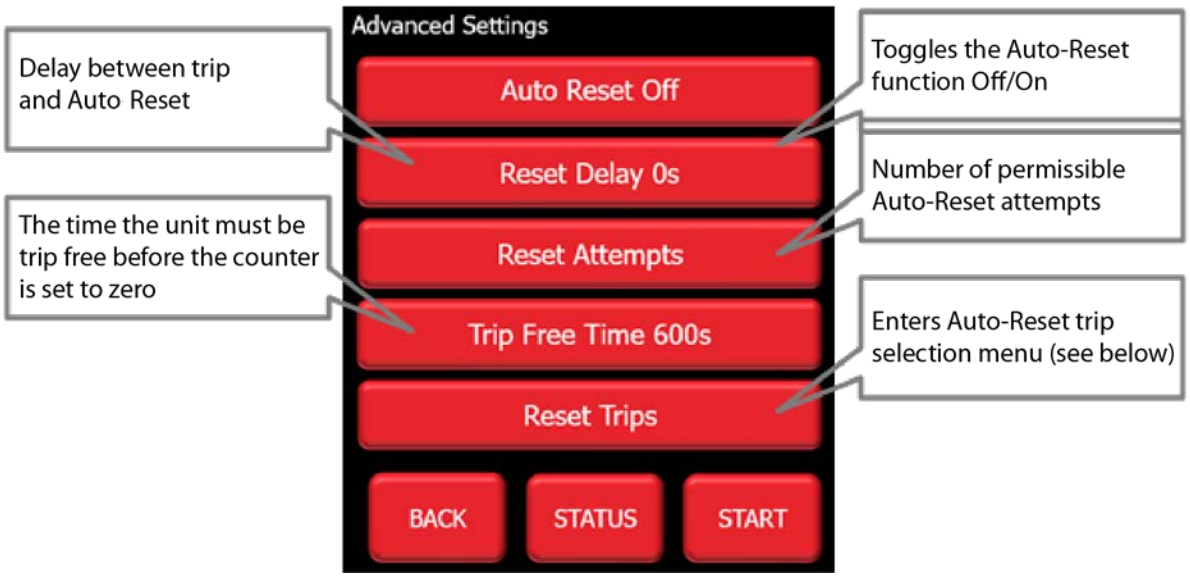

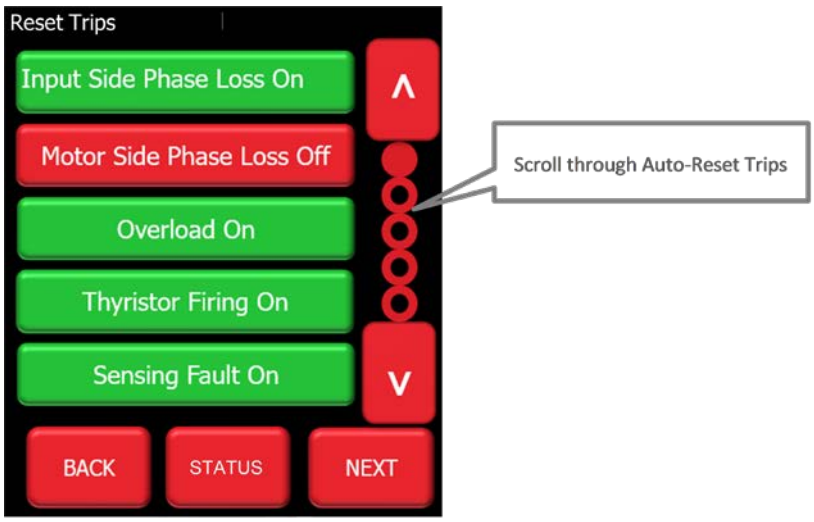

NOTE: The status of the Auto-Reset function may be observed in the 'Monitor' menu (third page).

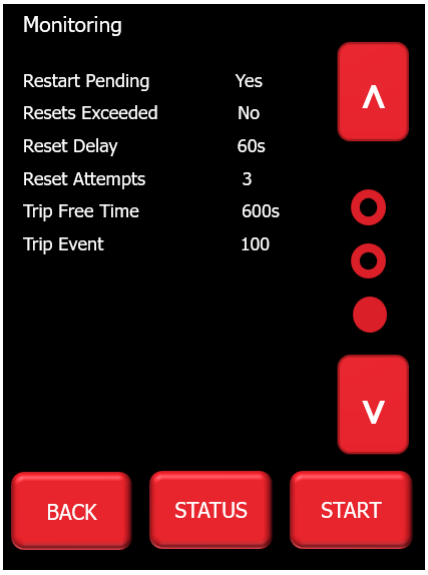

Mapping Auto Reset Status to Digital Outputs

Auto Reset Pending and Auto Reset Exceeded may be mapped to the Digital Outputs (D1 – D4). The selection screen is located in the I/O Menu:

I/O – DIGITAL OUTPUTS – DIGITAL OUTPUT (1 to 4) – SELECT FUNCTION

Two-Wire, Three-Wire and Communications control

The Auto Reset operates with two wire, three wire and communications start/stop. Generally, this is not a problem if the control supply is maintained, although warning should be given that in 3 wire and communications control the motor may start without a direct start signal (although it is implied as no stop had been given during the reset delay period).

Control Supply Loss

When the control supply is removed, the micro-controller is unable to make calculations in real time. To overcome this the calculations are made retrospectively when the starter powers up.

Two Wire: Following a control supply loss the Start signal must be retained (Fig 2).

Three Wire: The state of the start signal is saved when the control supply is removed, and if it is set to 'start,' the Auto Reset will continue at power up. When operating in this mode, the motor may start at power up without a start signal being present (Fig 3).

Modbus/Communications

The state of the start signal is saved when the control supply is removed and if it is set to 'start,' the Auto Reset will continue at power up. When operating in this mode, the motor may start at power up without a start signal being present (Fig 3).

Auto Restart Termination: If the time to re-establish the power exceeds the Reset Delay x Reset Attempts, the Auto Reset terminates.

Overload Trip

Following an overload trip, the overload will be at 100% and then cool exponentially to 0% after several minutes.

If a restart is attempted too soon, the starter will trip again as the overload would not have cooled to a sufficient level (Fig 5).

The Reset Delay must be long enough to allow the overload to cool. This also applies to the heatsink over-temperature trip.

Remote Start on Trip

If Auto Reset is turned on, the Remote Start On Trip is disabled and will be ignored.

Hand Auto

If the Hand Auto option is selected, the Hand selection will override the Auto Reset. The Auto Reset will be terminated, and the counters will be re-initialized.

Fig 1 : Auto Reset - Two Wire -Three Phase Supply Loss

The timing diagrams show the auto reset with a maintained two wire control system
The fault shown is a 3-phase supply loss only, the Control Supply maintained
The 3-Phase power is re-established (after the 2nd attempt) before the Reset Attempts counter is depleted
This assumes the start signal is maintained, if it is removed the Auto Reset terminates
Once power has been re-established there are no further outages and the counters are reset after the trip free time.

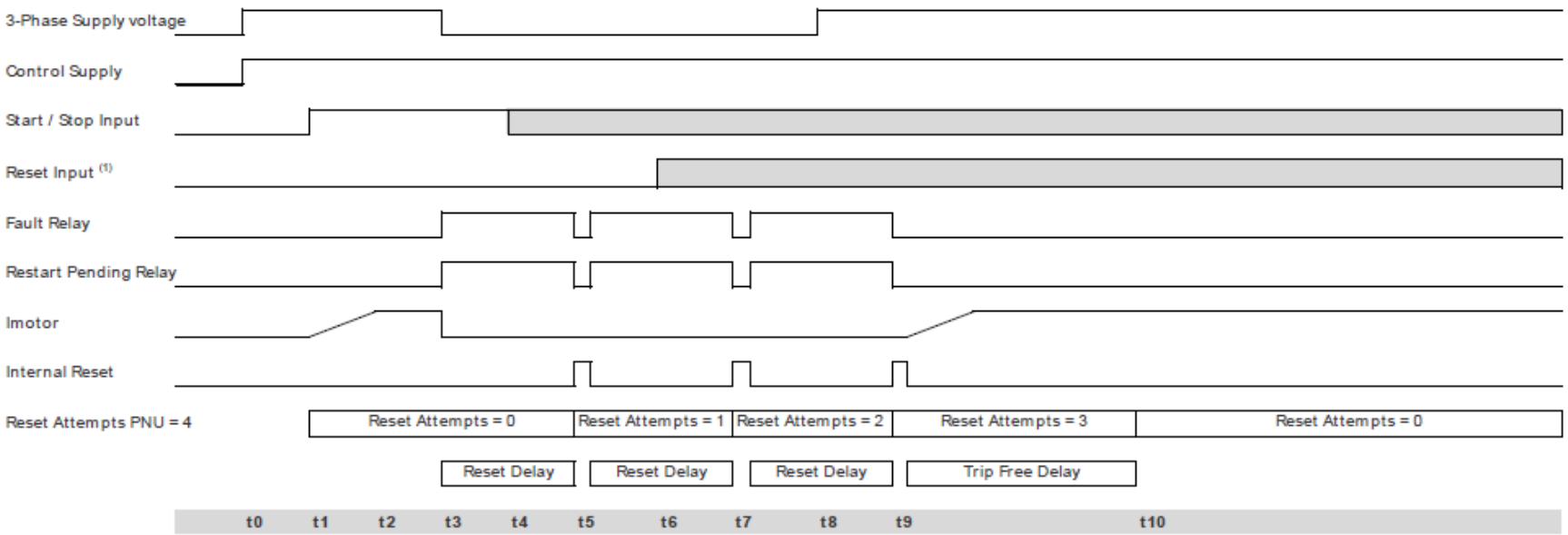

Sequence of events

t0 3 phase supply applied
t1 Start signal applied, motor starts
t2 Motor reaches full voltage
t3 3 phase supply removed
t4 Start signal must still be applied
If it has been removed Auto Reset feature re-initialises
t5 Reset delay = 0 Restart Attempt 1
t6 Rest Signal must be low
If the trip is reset the Auto Reset feature re-initialises
t7 Reset delay = 0 Restart Attempt 2
t8 3-Phase re-established
t9 Reset delay = 0 Restart Attempt 3
t10 Trip Free Delay = 0 Restart Attempt = 0

User Parameters (R/W)

PNU	Range	Default
Auto Reset	On/Off	Off
Reset Delay	0-7200s	0s
Reset Attempts	0-10	0
Reset Trips	All resettable trips	-
Trip Free Time	120-7200	600s

Monitor Parameters (R/O)

PNU	Range
Reset Attempts Remaining	10-0
Reset Delay Remaining	7200s-0s
Restart Pending	1-0
Trip Free Time Remaining	7200s-0s

Notes

For Two Wire control reset occurs automatically when the start signal changes state from low to high, reset shown is programmable reset input (1)

Fig 2 : Auto Reset - Two Wire - Control Supply Loss

The timing diagrams show the auto reset with a maintained two wire control system
The fault shown is a 3-phase supply loss **and** Control supply loss
The 3-Phase power and control supply are re-established (after the 2nd attempt) before the Reset Attempts counter is depleted
This assumes the start signal is maintained, if it is removed the Auto Reset terminates
Once power has been re-established there are no further outages and the counters are reset after the trip free time.

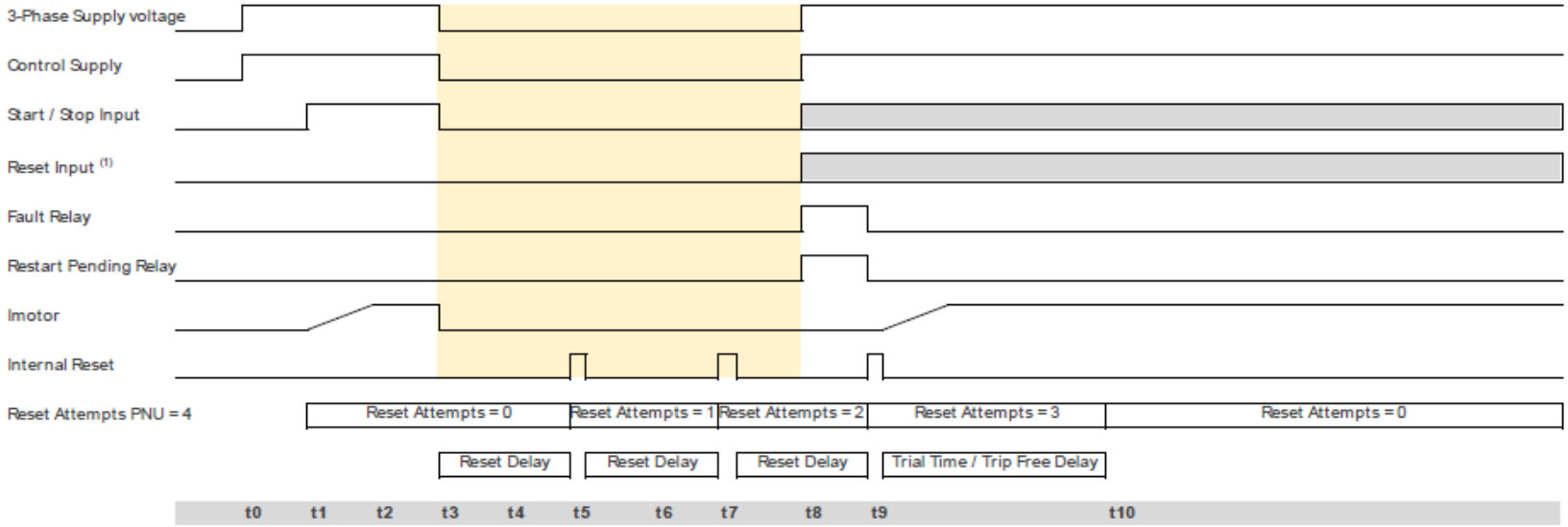

Sequence of events
t0 3 phase supply applied
t1 Start signal applied, motor starts
t2 Motor reaches full voltage
t3 3 phase supply removed
t5 Reset delay = 0 Restart Attempt 1
t7 Reset delay = 0 Restart Attempt 2
t8 3-Phase re-established
Start signal must still be applied
If it has been removed Auto Reset feature re-initialises
If the trip is reset the Auto Reset feature re-initialises
t9 Reset delay = 0 Restart Attempt 3
t10 Trip Free Delay = 0 Restart Attempt = 0

User Parameters (R/W)

PNU	Range	Default
Auto Reset	On/Off	Off
Reset Delay	0-7200s	0s
Reset Attempts	0-10	0
Reset Trips	All resettable trip	-
Trip Free Time	120-7200	600s

Monitor Parameters (R/O)

PNU	Range
Reset Attempts Remaining	10-0
Reset Delay Remaining	7200s-0s
Restart Pending	1-0
Trip Free Time Remaining	7200s-0s

Notes

The Starter is powered down between t3 and t8 (yellow shaded region)
During this time controller is unable to make the calculations in real time
To overcome this the calculations are made retrospectively at time t8
The Start Signal must be maintained, if it is not the Auto Restart will be terminated
For Two Wire control reset occurs automatically when the start signal changes state from low to high, reset shown is programmable reset input (1). If the time to re-establish the power exceeds (Reset Delay x Reset Attempts) to Auto Reset terminates

Fig 3 : Auto Reset - Three Wire - Three Phase Supply Loss

The timing diagrams show the auto reset with Three wire / Modbus control
The fault shown is a 3-phase supply loss only, the Control Supply maintained
The 3-Phase power is re-established (after the 2nd attempt) before the Reset Attempts counter is depleted
This assumes the momentary stop signal is not activated, if it is the Auto Reset terminates
Once power has been re-established there are no further outages and the counters are reset after the trip free time.

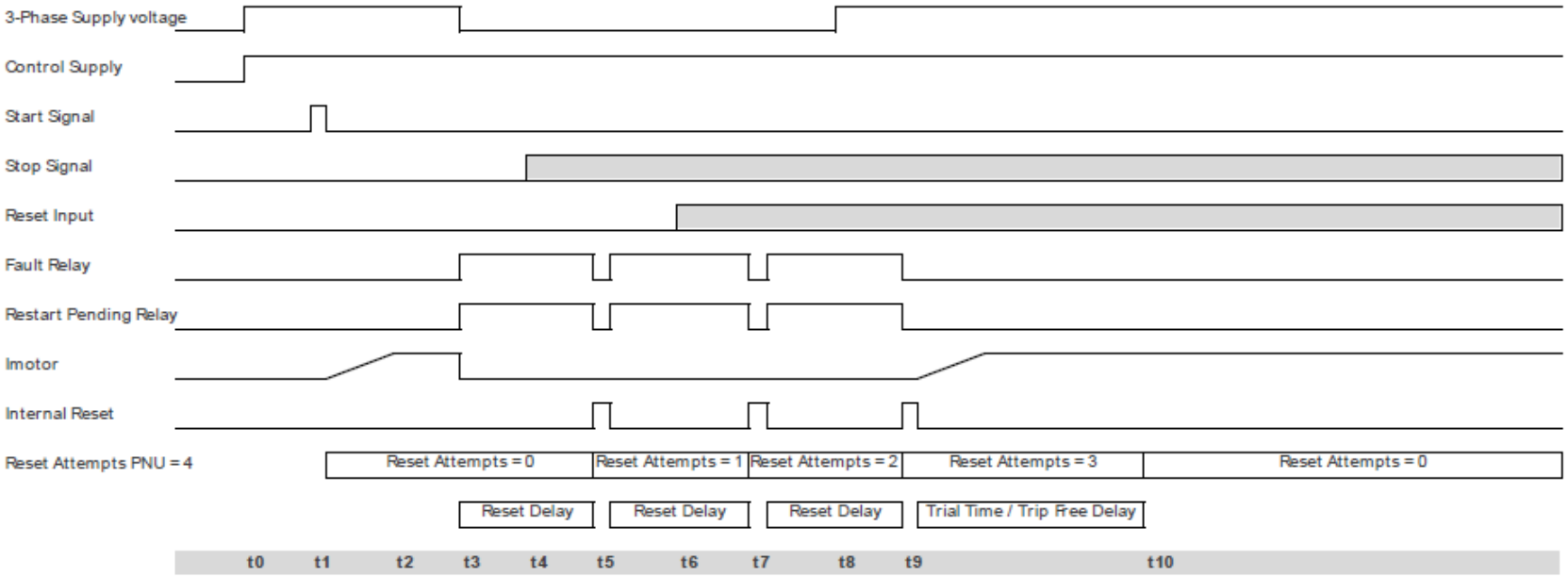

Sequence of events

t0 3 phase supply applied
t1 Start signal applied, motor starts
t2 Motor reaches full voltage
t3 3 phase supply removed
t4 Start signal must still be applied
If it has been removed Auto Reset feature re-initialises
t5 Reset delay = 0 Restart Attempt 1
t6 Rest Signal must be low
If the trip is reset the Auto Reset feature re-initialises
t7 Reset delay = 0 Restart Attempt 2
t8 3-Phase re-established
t9 Reset delay = 0 Restart Attempt 3
t10 Trip Free Delay = 0 Restart Attempt = 0

User Parameters (R/W)

PNU	Range	Default
Auto Reset	On/Off	Off
Reset Delay	0-7200s	0s
Reset Attempts	0-10	0
Reset Trips	All resettable trip	-
Trip Free Time	120-7200	600s

Monitor Parameters (R/O)

PNU	Range
Reset Attempts Remaining	10-0
Reset Delay Remaining	7200s-0s
Restart Pending	1-0
Trip Free Time Remaining	7200s-0s

Notes

Fig 4 : Auto Reset - Three Wire - Control Supply Loss

The timing diagrams show the auto reset with Three wire / Modbus control
The fault shown is a 3-phase supply loss **and** Control supply loss
The 3-Phase power and control supply are re-established (after the 2nd attempt) before the Reset Attempts counter is depleted
This assumes the momentary stop signal is not activated, if it is the Auto Reset terminates
Once power has been re-established there are no further outages and the counters are reset after the trip free time.

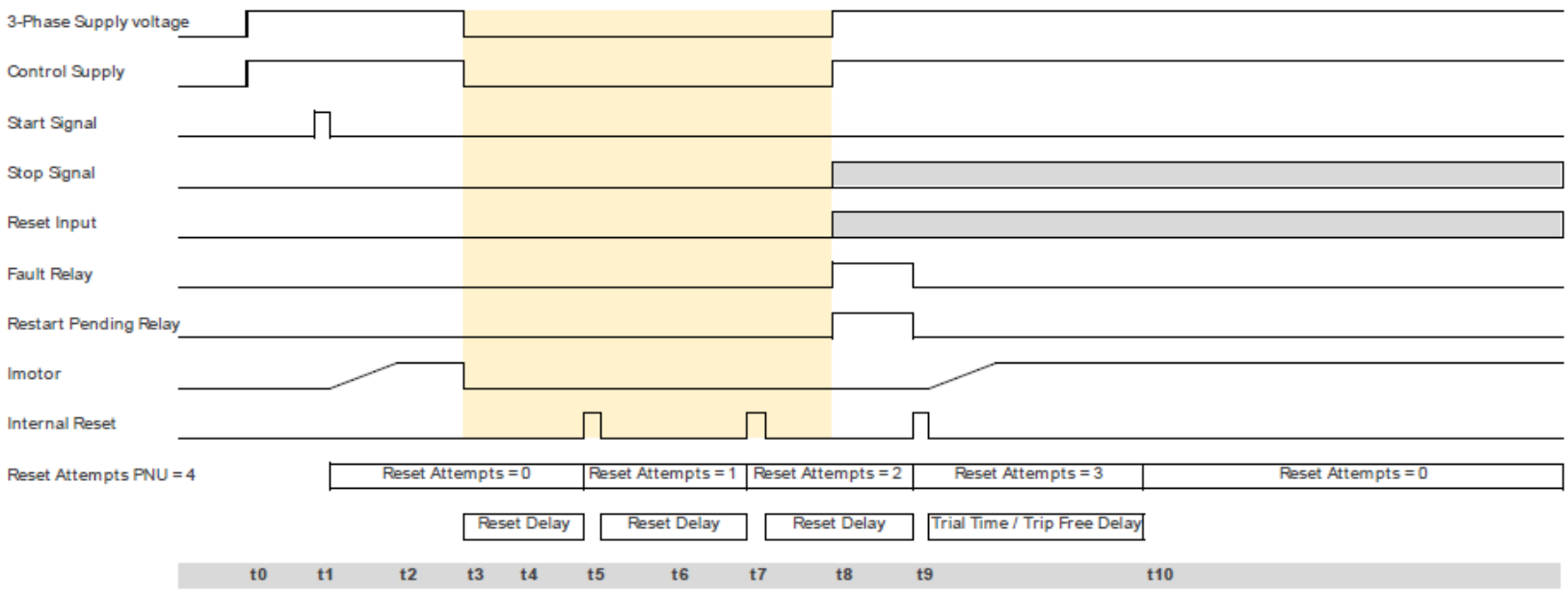

Sequence of events

t0 3 phase supply applied
t1 Start signal applied, motor starts
t2 Motor reaches full voltage
t3 3 phase supply removed
t5 Reset delay = 0 Restart Attempt 1
t7 Reset delay = 0 Restart Attempt 2
t8 3-Phase re-established
Start signal must still be applied
If it has been removed Auto Reset feature re-initialises
Rest Signal must be low
If the trip is reset the Auto Reset feature re-initialises
t9 Reset delay = 0 Restart Attempt 3
t10 Trip Free Delay = 0 Restart Attempt = 0

User Parameters (R/W)

PNU	Range	Default
Auto Reset	On/Off	Off
Reset Delay	0-7200s	0s
Reset Attempts	0-10	0
Reset Trips	All resettable trips	-
Trip Free Time	120-7200	600s

Monitor Parameters (R/O)

PNU	Range
Reset Attempts Remaining	10-0
Reset Delay Remaining	7200s-0s
Restart Pending	1-0
Trip Free Time Remaining	7200s-0s

Notes

The controller is powered down between t3 and t8 (yellow shaded region)
During this time controller is unable to make the calculations in real time
To overcome this the calculations are made retrospectively at time t8
Start signal state saved at power down and loaded at power up. **This means it will start without a start signal being present**
If the time to re-establish the power exceeds (Reset Delay x Reset Attempts) to Auto Reset terminates

Fig 5 : Auto Reset - Two Wire - Overload

The timing diagrams show the auto reset with a maintained two wire control system
The fault shown is an overload trip, the Control Supply maintained
In this instance the Auto Reset clears the trip but the overload (%) will take a certain amount of time to decay
If insufficient time is left before re-starts the overload will trip again repeatably until the Reset Attempts count exceeds it set value.
This must be considered and enough time left to allow the overload to decay to a low level

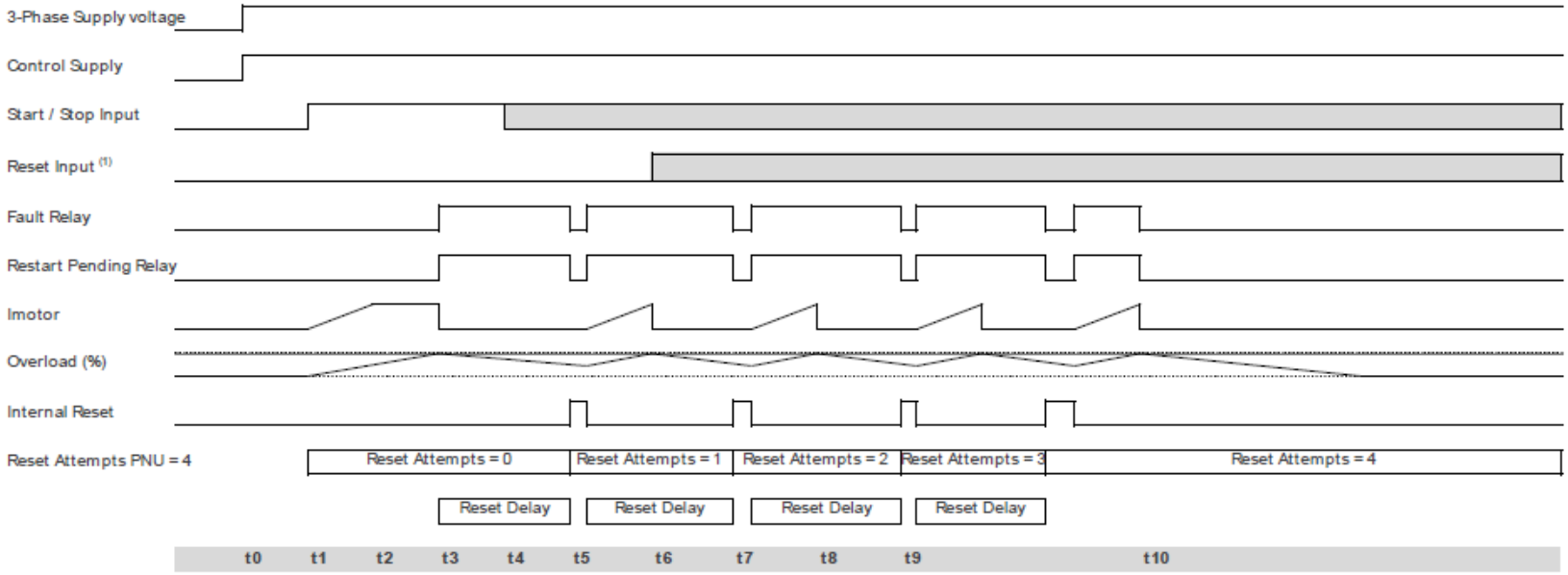

Sequence of events

t0 3 phase supply applied
t1 Start signal applied, motor starts
t2 Motor reaches full voltage
t3 3 phase supply removed
t4 Start signal must still be applied
If it has been removed Auto Reset feature re-initialises
t5 Reset delay = 0 Restart Attempt 1
t6 Rest Signal must be low
If the trip is reset the Auto Reset feature re-initialises
t7 Reset delay = 0 Restart Attempt 2
t8 3-Phase re-established
t9 Reset delay = 0 Restart Attempt 3
t10 Trip Free Delay = 0 Restart Attempt = 0

User Parameters (R/W)

PNU	Range	Default
Auto Reset	On/Off	Off
Reset Delay	0-7200s	0s
Reset Attempts	0-10	0
Reset Trips	All resettable trips	-
Trip Free Time	120-7200	600s

Monitor Parameters (R/O)

PNU	Range
Reset Attempts Remaining	10-0
Reset Delay Remaining	7200s-0s
Restart Pending	1-0
Trip Free Time Remaining	7200s-0s

Notes

In this instance the starter has failed to Auto Restart in the set number of attempts
The starter will remain in the tripped state until reset
To overcome this the Reset Delay time should be extended to allow the overload to cool
For Two Wire control reset occurs automatically when the start signal changes state from low to high, reset shown is programmable reset input (1)

Parameter Summary

Summary of Parameters Not Configurable Through Touchscreen Menu

These parameters are configurable through network communications.

Summary – Parameters Not Configurable Through Touchscreen								
Group	**Parameter**	**Units**	**Range**	**Read / Write**	**Modbus**		**Default Setting**	**User Setting**
					Address	**Hex**		
Control Commands *(for Digital Inputs)* [detailed info starts page 3–25]	P0.0 – Start/Stop	toggle	OFF (Stop) / ON (Start)	R/W	17920	4600	OFF	
	P0.1 – Freeze Ramp	toggle	OFF / ON	R/W	18240	4740	OFF	
	P0.2 – Reset	toggle	OFF / ON	R/W	18368	47C0	OFF	
	P0.3 – External Trip	toggle	OFF / ON	R/W	18880	49C0	OFF	
Status Indications [detailed info starts page 3–26]	P0.4 – Ready	–	OFF / ON	Read	37184	9140	OFF	–
	P0.5 – Enabled	–	OFF / ON	Read	37248	9180	OFF	–
	P0.6 – Error	–	OFF / ON	Read	37312	91C0	OFF	–
	P0.7 – Running	–	OFF / ON	Read	37632	9300	OFF	–
	P0.8 – End Of Start	–	OFF / ON	Read	37760	9380	OFF	–
	P0.9 – Current Limit	–	OFF / ON	Read	37824	93C0	OFF	–
	P0.10 – iERS Active	–	OFF / ON	Read	38080	94C0	OFF	–
	P0.12 – I/O Status Register	–	0 to 255	Read	62016	F240	OFF	–
Block Transfer [detailed info starts page 3–24]	P0.20~P0.35 – Block Transfer Address Pointers	–	0 to 65535	R/W	17600 ~17615	44C0 ~44CF	OFF	
	P0.40~P0.55 – Block Transfer Data Locations	–	0 to 4,294,967,295	R/W	17664 ~17694	4500 ~451E	OFF	

Summary of Parameters for Auto Setup

Summary – Parameters for Touchscreen Setup – "Auto Setup" Category									
	Group	**Parameter**	**Units**	**Range**	**Read / Write**	**Modbus**		**Default Setting**	**User Setting**
						Address	**Hex**		
Auto Setup	***Auto Setup*** [detailed info starts page 3–30]	P0.11 – Application	n/a	See the previous "Auto Setup Parameter Settings" table (*page 3–4*)	R/W	19200	4B00	Default	
		P5.1 – Trip Class (Automatically selected from Application selection)	n/a	10, 20, 30	R/W	25664	6440	10	
		P5.0 – Motor Current	A	10% to 100% of SR55 rated current	R/W	25728	6480	100%	
		P7.0 – Control Method	n/a	Local Touch Screen User Programmable Two Wire Control Three Wire Control Modbus Network	R/W	59392	E800	Local Touch Screen	
		P10.0 – Digital Input Voltage	V	230VAC, 110VAC, 24VDC	R/W	10880	2A80	230VAC	

Summary of Parameters for Individual Parameter Setup (grouped by touchscreen navigation)

Parameters from "Advanced" Menu Category – Summary

Summary – Parameters for Touchscreen Setup – "Advanced" Category									
	Group	**Parameter**	**Units**	**Range**	**Read / Write**	**Modbus Address**	**Modbus Hex**	**Default Setting**	**User Setting**
Category – Advanced	P1.0 – Save Parameters		toggle	NO / YES	R/W	62144	F2C0	NO	
	(P2) Automatic Settings [detailed info starts page 3–32]	P2.0 – Automatic Pedestal	toggle	OFF / ON	R/W	19840	4D80	OFF	
		P2.1 – Automatic Ramp	toggle	OFF / ON	R/W	20352	4F80	OFF	
		P2.2 – Automatic End Start (1)	toggle	OFF / ON	R/W	19968	4E00	OFF	
		P2.3 – Automatic Stop	toggle	OFF / ON	R/W	20160	4EC0	OFF	
		P2.4 – Automatic Stop Profile	%	0 to 100	R/W	20608	5080	50	
		P2.5 – Automatic End Stop	toggle	OFF / ON	R/W	20416	4FC0	OFF	
		P2.6 – Automatic Impact Load	toggle	OFF / ON	R/W	20480	5000	OFF	
		P2.7 – Auto Smooth Stop	toggle	OFF / ON	R/W	20224	4F00	OFF	
		P2.8 – Auto Smoothing Level	%	10 to 100	R/W	20672	50C0	50	
		P2.9 – Automatic End Start (2)	toggle	OFF / ON	R/W	19904	4DC0	OFF	
		P2.10 – Automatic End Start (3)	toggle	OFF / ON	R/W	20032	4E40	OFF	
		P2.11 – Rate End Start (3)	%	0 to 100	R/W	768	0300	50	
	(P3) Start Settings [detailed info starts page 3–35]	P3.0 – Start Time	s	1 to 300	R/W	7104	1BC0	10	
		P3.1 – Start Pedestal	%	10 to 100	R/W	704	02C0	20	
		P3.2 – Start Current Limit → Start Current Limit Trip	toggle	OFF / ON	R/W	53790	D21E	ON	
		P3.3 – Start Current Limit → Start Current Limit Level	A	100% mtr FLA to 450% SR55 rated A	R/W	26880	6900	350% mtr FLA	
		P3.4 – Start Current Limit → Start Current Limit Time	s	1 to 300	R/W	26944	6940	30	
		P3.5 – Kick Start → Kick Start	toggle	OFF / ON	R/W	320	0140	OFF	
		P3.6 – Kick Start → Kick Start Time	ms	10 to 2,000	R/W	7040	1B80	100	
		P3.7 – Kick Start → Kick Start Pedestal	%	30 to 80	R/W	640	0280	75	
		P3.8 – Contactor Delay	ms	20 to 800	R/W	8320	2080	160	
	(P4) Stop Settings [detailed info starts page 3–38]	P4.0 – Stop Time	s	0 to 300	R/W	7296	1C80	0	
		P4.1 – Stop Pedestal	%	10 to 40	R/W	896	0380	10	
		P4.2 – Stop Current Limit → Stop Current Limit Trip	toggle	OFF / ON	R/W	53791	D21F	OFF	
		P4.3 – Stop Current Limit → Stop Current Limit Level	A	100% mtr FLA to 450% SR55 rated A	R/W	28800	7080	350% mtr FLA	
		P4.4 – Stop Current Limit → Stop Current Limit Time	s	1 to 300	R/W	28864	70C0	10	

Summary – Parameters for Touchscreen Setup – "Advanced" Category (continued)									
–	Group	Parameter	Units	Range	Read / Write	Modbus Address	Modbus Hex	Default Setting	User Setting
Category – Advanced	(P5) Motor Protection [detailed info starts page 3–39]	P5.0 – Motor Current	A	10% to 100% of SR55 rated A	R/W	25728	6480	100%	
		P5.1 – Trip Class	class	10, 20, 30	R/W	25664	6440	10	
		Low Current Settings → P5.2 – Low Current Trip	toggle	OFF / ON	R/W	53787	D21B	OFF	
		Low Current Settings → P5.3 – Low Current Trip Level	A	25% to 100% of motor FLA	R/W	26304	66C0	25%	
		Low Current Settings → P5.4 – Low Current Trip Time	ms	100 to 9,000	R/W	26368	6700	100	
		Shearpin Settings → P5.5 – Shearpin Trip	toggle	OFF / ON	R/W	53793	D221	ON	
		Shearpin Settings → P5.6 – Shearpin Trip Current	A	100% mtr FLA to 450% SR55 rated A	R/W	27584	6BC0	450% SR55 A	
		Shearpin Settings → P5.7 – Shearpin Trip Time	ms	100 to 9,000	R/W	27648	6C00	100	
		Overload Settings → P5.8 – Overload Trip	toggle	OFF / ON	R/W	53792	D220	ON	
		Overload Settings → P5.9 – Overload Level	A	50% to 125% of motor FLA	R/W	28224	6E40	115%	
	(P6) iERS [detailed info starts page 3–42]	P6.0 – iERS	toggle	OFF / ON	R/W	21120	5280	ON *	
		P6.1 – Dwell Time	s	1 to 300	R/W	7360	1CC0	5	
		P6.2 – iERS Rate	%	0 to 100	R/W	21184	52C0	25	
		P6.3 – iERS Level	%	0 to 100	R/W	21376	5380	100	
		P6.4 – Fixed Voltage (Level)	V	100 to 500	R/W	35200	8980	500	
		P6.5 – Fixed Voltage	toggle	OFF / ON	R/W	35264	89C0	OFF	
		* *NOTE: iERS (P6.0) default setting is "OFF" beginning in firmware version 59.35.*							
	(P7) [detailed info page 3–44]	P7.0 – Control Method	–	Local Touch Screen User Programmable Two Wire Control Three Wire Control Modbus Network	R/W	59392	E800	Local Touch Screen	
	(P8) Trip Settings [detailed info starts page 3–45]	P8.0 – Trip Sensitivity	%	0 to 100	R/W	44864	AF40	0	
		P8.1 – Cover Open Trip	toggle	OFF / ON	R/W	53803	D22B	OFF	
		P8.2 – Shearpin Trip	toggle	OFF / ON	R/W	53793	D221	ON	
		P8.3 – Overload Trip	toggle	OFF / ON	R/W	53792	D220	ON	
		P8.4 – Low Current Trip	toggle	OFF / ON	R/W	53787	D21B	OFF	
		P8.5 – Start Current Limit Trip	toggle	OFF / ON	R/W	53790	D21E	ON	
		P8.6 – Stop Current Limit Trip	toggle	OFF / ON	R/W	53791	D21F	OFF	
		P8.7 – PTC Motor Thermistor Trip	toggle	OFF / ON	R/W	53794	D222	OFF	
		P8.8 – L1-L2-L3 Trip	toggle	OFF / ON	R/W	53808	D230	OFF	
		P8.9 – L1-L3-L2 Trip	toggle	OFF / ON	R/W	53807	D22F	OFF	
		P8.10 – Remote Start Trip	toggle	OFF / ON	R/W	53804	D22C	ON	
		P8.11 – Current Sensor Trip	toggle	OFF / ON	R/W	53775	D20F	OFF	
		P8.12 – Fan Trip	toggle	OFF / ON	R/W	53782	D216	ON	
		P8.13 – Communications Trip	toggle	OFF / ON	R/W	53796	D224	ON	
		P8.14 – Shut Down (1)	toggle	OFF / ON	R/W	53769	D209	ON	
		P8.15 – Shut Down (2)	toggle	OFF / ON	R/W	53770	D20A	ON	
		P8.16 – Thyristor Firing Trip	toggle	OFF / ON	R/W	53774	D20E	ON	
		P8.17 – Motor Side Phase Loss	toggle	OFF / ON	R/W	53777	D211	ON	
		P8.18 – Sensing Fault Trip	toggle	OFF / ON	R/W	53781	D215	ON	
		P8.19 – Thermal Sensor Trip	toggle	OFF / ON	R/W	53768	D208	ON	
		P8.20 – External Trip Enable	toggle	OFF / ON	R/W	53795	D223	OFF	
		P8.21 – Main Board Trip	toggle	OFF / ON	R/W	53800	D228	ON	
		P8.22 – Keypad Trip	toggle	OFF / ON	R/W	53798	D226	OFF	
		P8.23 – Logging Trip	toggle	OFF / ON	R/W	53799	D227	OFF	
		P8.24 – Input Side Phase Loss	toggle	OFF / ON	R/W	53762	D202	ON	

Summary – Parameters for Touchscreen Setup – "Advanced" Category (continued)									
–	Group	Parameter	Units	Range	Read / Write	Modbus Address	Modbus Hex	Default Setting	User Setting
Adv	(P9) [page 3–52]	P9.0 – Firing Mode	toggle	In-Delta / In-Line	R/W	128	0080	In-Line	
		P9.1 – Legacy Delta Mode	toggle	OFF / ON	R/W	192	00C0	OFF	
		P9.2 – Main Contactor Control	toggle	OFF / ON	R/W	14144	3740	OFF	
		P9.3 – Hand-Auto Control	toggle	OFF / ON	R/W	28160	6E00	OFF	

Parameters From "I/O" Menu Category – Summary

Summary – Parameters for Touchscreen Setup – "I/O" Category									
	Group	Parameter	Units	Range	Read / Write	Modbus Address	Modbus Hex	Default Setting	User Setting
Category – I/O	(P10) Digital Inputs [detailed info starts page 3–54]	P10.0 – Digital Input Voltage	V	230VAC, 110VAC, 24VDC	R/W	10880	2A80	230VAC	
		P7.0 – Control Method	–	Local Touch Screen User Programmable Two Wire Control Three Wire Control Modbus Network	R/W	59392	E800	Local Touch Screen	
		P10.1 – Digital Input 1 (D1-1I) → Select Function	–	Off Start / Stop Freeze Ramp Reset iERS External Trip	R/W	10944	2AC0	Start / Stop	
		P10.2 – Digital Input 1 (D1-1I) → High Input =1 Sets Value	toggle	OFF / ON	R/W	11264	2C00	ON	
		P10.3 – Digital Input 2 (D1-2I) → Select Function	–	same as DI1 function selections	R/W	10945	2AC1	OFF	
		P10.4 – Digital Input 2 (D1-2I) → High Input =1 Sets Value	toggle	OFF / ON	R/W	11266	2C02	ON	
		P10.5 – Digital Input 3 (D2-1I) → Select Function	–	same as DI1 function selections	R/W	10946	2AC2	Reset	
		P10.6 – Digital Input 3 (D2-1I) → High Input =1 Sets Value	toggle	OFF / ON	R/W	11268	2C04	ON	
	(P11) Digital Outputs [detailed info starts page 3–57]	P11.0 – Digital Output 1 N/C (12) → Select Function	–	Off Ready Enabled Error Running End Of Start Current Limit iERS Active Auto Reset Pending Auto Reset Exceeded Shearpin Low Current	R/W	11584	2D40	Error	
		P11.1 – Digital Output 1 N/C (12) → High Output =1 When Value	toggle	OFF / ON	R/W	11904	2E80	ON	
		P11.2 – Digital Output 2 N/O (24) → Select Function	–	same as DO1 function selections	R/W	11585	2D41	Error	
		P11.3 – Digital Output 2 N/O (24) → High Output =1 When Value	toggle	OFF / ON	R/W	11906	2E82	ON	
		P11.4 – Digital Output 3 N/O (34) → Select Function	–	same as DO1 function selections	R/W	11586	2D42	Run-ning	
		P11.5 – Digital Output 3 N/O (34) → High Output =1 When Value	toggle	OFF / ON	R/W	11908	2E84	ON	
		P11.6 – Digital Output 4 N/O (44) → Select Function	–	same as DO1 function selections	R/W	11587	2D43	End Of Start	
		P11.7 – Digital Output 4 N/O (44) → High Output =1 When Value	toggle	OFF / ON	R/W	11910	2E86	ON	
	(P12) Analog Inputs [detailed info starts page 3–60]	P12.0 – Analog Input Type	toggle	0–10V / 4–20mA	R/W	9600	2580	0–10V	
		P12.1 – Select Function	–	Off Current Limit Start Current Shearpin Current Overload	R/W	9664	25C0	OFF	
		P12.2 – Scaling Level	–	0 to 16,384	R/W	9728	2600	16,384	

Parameter Summary for Touchscreen Setup – "I/O" Category (continued)									
–	Group	Parameter	Units	Range	Read / Write	Modbus PNU	Modbus Hex	Default Setting	User Setting
Category – I/O	(P13) Analog Outputs [detailed info starts page 3–61]	P13.0 – Analog Output Type	toggle	0–10V / 4–20mA	R/W	8960	2300	0–10V	
		P13.1 – Select Function	–	Off Current Measured Overload Overload SCR P-Total	R/W	9024	2340	OFF	
		P13.2 – Scaling Level	–	0 to 16,384	R/W	9088	2380	0	
	(P14) [details page 3–62]	P14.0 – PTC Motor Thermistor Trip	toggle	OFF / ON	R/W	53794	D222	OFF	

Parameters from "Monitor" Menu Category – Summary

Summary – Parameters for Touchscreen Setup – "Monitor" Category									
	Group	Parameter	Units	Range	Read / Write	Modbus Address	Modbus Hex	Default Setting	User Setting
Category – Monitor	(P15) Monitoring [detailed info starts page 3–63]	P15.0 – Line Frequency	Hz	45 to 65	Read	32000	7D00	n/a	–
		P15.1 – Phase Rotation	–	L1-L2-L3 or L1-L3-L2	Read	32064	7D40	L1-L2-L3	–
		P15.2 – I1	A	0 to 10,000	Read	33536	8300	0	–
		P15.3 – I2	A	0 to 10,000	Read	33538	8302	0	–
		P15.4 – I3	A	0 to 10,000	Read	33540	8304	0	–
		P15.5 – Current I rms	A	0 to 10,000	Read	32896	8080	0	–
		P15.6 – V rms (Approx)	V	0 to 500	Read	32960	80C0	0	–
		P15.7 – Real Power Factor	–	0 to 1	Read	33024	8100	0	–
		P15.8 – True Power P	kW	0 to 10,000	Read	34688	8780	0	–
		P15.9 – Apparent Power S	kVA	0 to 10,000	Read	34816	8800	0	–
		P15.10 – Reactive Power Q	kVAR	0 to 10,000	Read	34944	8880	0	–
		P15.11 – iERS Saving Level	%	0 to 100	Read	35008	88C0	0	–
		P15.12 – Delay Angle	degree	0° to 55°	Read	22400	5780	0	–
		P15.13 – Backstop	degree	0° to 55°	Read	23040	5A00	0	–
		P15.14 – Delay Max	degree	0° to 55°	Read	22464	57C0	0	–
		P15.15 – Pres PF Degrees	degree	0° to 90°	Read	21824	5540	0	–
		P15.16 – Ref PF Degrees	degree	0° to 90°	Read	21760	5500	0	–
		P15.17 – Start Saving Level	%	50% to 80% of mtr FLA	Read	21320	5348	80%	–
		P18.0 – Last Peak (Start) Current	A	0 to 10,000	Read	38400	9600	0	–
		P15.18 – HeatSink Temp	°C	-20°C to 80°C	Read	36544	8EC0	ambient	–
		P15.19 – Motor Thermistor	–	0 to 1024	Read	10432	28C0	0	–
		P15.20 – Overload	%	0 to 100	Read	33408	8280	0	–

Parameters from "Log" Menu Category – Summary

Summary – Parameters for Touchscreen Setup – "Log" Category									
	Group	**Parameter**	**Units**	**Range**	**Read / Write**	**Modbus Address**	**Modbus Hex**	**Default Setting**	**User Setting**
Category – Log	***(P16)* Event Times*** for Last Peak Start Currents, Last Temperatures, Last Overloads [detailed info starts page 3–69]	P16.0 – (Event Time) Last Peak Start Current / Last Temperature / Last Overload	hh : mm : ss	Time since midnight; Days since 01/01/1984	Read	38464	9640	GMT	–
		P16.1 – (Event Time) Last Peak Start Current / Last Temperature / Last Overload -1			Read	38467	9643		–
		P16.2 – (Event Time) Last Peak Start Current / Last Temperature / Last Overload -2			Read	38470	9646		–
		P16.3 – (Event Time) Last Peak Start Current / Last Temperature / Last Overload -3			Read	38473	9649		–
		P16.4 – (Event Time) Last Peak Start Current / Last Temperature / Last Overload -4			Read	38476	964C		–
		P16.5 – (Event Time) Last Peak Start Current / Last Temperature / Last Overload -5			Read	38479	964F		–
		P16.6 – (Event Time) Last Peak Start Current / Last Temperature / Last Overload -6			Read	38482	9652		–
		P16.7 – (Event Time) Last Peak Start Current / Last Temperature / Last Overload -7			Read	38485	9655		–
		P16.8 – (Event Time) Last Peak Start Current / Last Temperature / Last Overload -8			Read	38488	9658		–
		P16.9 – (Event Time) Last Peak Start Current / Last Temperature / Last Overload -9			Read	38491	965B		–
	** P16 event times are associated with parameters P18, P20, and P21, and the times are displayed on each of those logs.*								
	(P17) Trip Log [detailed info starts page 3–72]	P17.0 – Last Trip	–	0 to 65,535	Read	60608	ECC0	0	–
		P17.1 – Last Trip -1	–	0 to 65,535	Read	60609	ECC1	0	–
		P17.2 – Last Trip -2	–	0 to 65,535	Read	60610	ECC2	0	–
		P17.3 – Last Trip -3	–	0 to 65,535	Read	60611	ECC3	0	–
		P17.4 – Last Trip -4	–	0 to 65,535	Read	60612	ECC4	0	–
		P17.5 – Last Trip -5	–	0 to 65,535	Read	60613	ECC5	0	–
		P17.6 – Last Trip -6	–	0 to 65,535	Read	60614	ECC6	0	–
		P17.7 – Last Trip -7	–	0 to 65,535	Read	60615	ECC7	0	–
		P17.8 – Last Trip -8	–	0 to 65,535	Read	60616	ECC8	0	–
		P17.9 – Last Trip -9	–	0 to 65,535	Read	60617	ECC9	0	–
	(P18) Start Current Log [detailed info starts page 3–75]	P18.0 – Last Peak (Start) Current	A	0 to 10,000	Read	38400	9600	0	–
		P18.1 – Last Peak Start Current -1	A	0 to 10,000	Read	38402	9602	0	–
		P18.2 – Last Peak Start Current -2	A	0 to 10,000	Read	38404	9604	0	–
		P18.3 – Last Peak Start Current -3	A	0 to 10,000	Read	38406	9606	0	–
		P18.4 – Last Peak Start Current -4	A	0 to 10,000	Read	38408	9608	0	–
		P18.5 – Last Peak Start Current -5	A	0 to 10,000	Read	38410	960A	0	–
		P18.6 – Last Peak Start Current -6	A	0 to 10,000	Read	38412	960C	0	–
		P18.7 – Last Peak Start Current -7	A	0 to 10,000	Read	38414	960E	0	–
		P18.8 – Last Peak Start Current -8	A	0 to 10,000	Read	38416	9610	0	–
		P18.9 – Last Peak Start Current -9	A	0 to 10,000	Read	38418	9612	0	–

Summary – Parameters for Touchscreen Setup – "Log" Category (continued)									
–	Group	Parameter	Units	Range	Read / Write	Modbus Address	Modbus Hex	Default Setting	User Setting
Category – Log	(P19) Stop Current Log [detailed info starts page 3–78]	P19.0 – Last Peak Stop Current	A	0 to 10,000	Read	39040	9880	0	–
		P19.1 – Last Peak Stop Current -1	A	0 to 10,000	Read	39042	9882	0	–
		P19.2 – Last Peak Stop Current -2	A	0 to 10,000	Read	39044	9884	0	–
		P19.3 – Last Peak Stop Current -3	A	0 to 10,000	Read	39046	9886	0	–
		P19.4 – Last Peak Stop Current -4	A	0 to 10,000	Read	39048	9888	0	–
		P19.5 – Last Peak Stop Current -5	A	0 to 10,000	Read	39050	988A	0	–
		P19.6 – Last Peak Stop Current -6	A	0 to 10,000	Read	39052	988C	0	–
		P19.7 – Last Peak Stop Current -7	A	0 to 10,000	Read	39054	988E	0	–
		P19.8 – Last Peak Stop Current -8	A	0 to 10,000	Read	39056	9890	0	–
		P19.9 – Last Peak Stop Current -9	A	0 to 10,000	Read	39058	9892	0	–
	(P20) Temperature Log [detailed info starts page 3–81]	P20.0 – Last Temperature	°C	-20°C to 80°C	Read	39680	9B00	ambient	–
		P20.1 – Last Temperature -1	°C	-20°C to 80°C	Read	39681	9B01	ambient	–
		P20.2 – Last Temperature -2	°C	-20°C to 80°C	Read	39682	9B02	ambient	–
		P20.3 – Last Temperature -3	°C	-20°C to 80°C	Read	39683	9B03	ambient	–
		P20.4 – Last Temperature -4	°C	-20°C to 80°C	Read	39684	9B04	ambient	–
		P20.5 – Last Temperature -5	°C	-20°C to 80°C	Read	39685	9B05	ambient	–
		P20.6 – Last Temperature -6	°C	-20°C to 80°C	Read	39686	9B06	ambient	–
		P20.7 – Last Temperature -7	°C	-20°C to 80°C	Read	39687	9B07	ambient	–
		P20.8 – Last Temperature -8	°C	-20°C to 80°C	Read	39688	9B08	ambient	–
		P20.9 – Last Temperature -9	°C	-20°C to 80°C	Read	39689	9B09	ambient	–
	(P21) Overload Log [detailed info starts page 3–85]	P21.0 – Last Overload	%	0 to 100	Read	40320	9D80	0	–
		P21.1 – Last Overload -1	%	0 to 100	Read	40321	9D81	0	–
		P21.2 – Last Overload -2	%	0 to 100	Read	40322	9D82	0	–
		P21.3 – Last Overload -3	%	0 to 100	Read	40323	9D83	0	–
		P21.4 – Last Overload -4	%	0 to 100	Read	40324	9D84	0	–
		P21.5 – Last Overload -5	%	0 to 100	Read	40325	9D85	0	–
		P21.6 – Last Overload -6	%	0 to 100	Read	40326	9D86	0	–
		P21.7 – Last Overload -7	%	0 to 100	Read	40327	9D87	0	–
		P21.8 – Last Overload -8	%	0 to 100	Read	40328	9D88	0	–
		P21.9 – Last Overload -9	%	0 to 100	Read	40329	9D89	0	–
	(P22) Totals Log [page 3–87]	P22.0 – Number of Starts	–	0 to 4,294,836,225	Read	35840	8C00	0	–
	(P23) [page 3–87]	P23.0 – Download Log File	–	–	R/W	n/a	n/a	–	
	(P24) [page 3–87]	P24.0 – Clear Trip Log	–	–	R/W	n/a	n/a	–	

Parameters from "Device" Menu Category – Summary

Summary – Parameters for Touchscreen Setup – "Device" Category									
	Group	**Parameter**	**Units**	**Range**	**Read / Write**	**Modbus Address**	**Modbus Hex**	**Default Setting**	**User Setting**
Category – Device	***(P25)*** [detailed info starts page 3–88; **See important P25.4 PASSCODE WARNING!**]	P25.0 – Update Firmware	–	–	R/W	–	–	–	
		P25.1 – Date	–	current date	R/W	–	–	–	
		P25.2 – Time	hh:mm:ss	GMT / local	R/W	14720	3980	GMT	
		P25.3 – Language	–	*refer to the "Parameter Details" section for list of available languages*	R/W	13376	3440	English	
		P25.4 – Passcode	–	0 to 255 per Byte	R/W	12864 12865 12866 12867	3240 3241 3242 3243	n/a	
		P25.5 – Backlight Timeout	s	0 to 3,600	R/W	14208	3780	60	
	(P26) Networks [detailed info starts page 3–90]	P26.0 – Modbus Network Address	–	1 to 32	R/W	16000	3E80	1	
		P26.1 – Modbus Network Baud Rate	Baud	9,600 19,200 38,400 57,600 115,200	R/W	16064	3EC0	19,200	
		P26.2 – Modbus Network Parity	–	none / odd / even	R/W	16128	3F00	even	
		P26.3 – Modbus Network Traffic LEDs	toggle	OFF / ON	R/W	14080	3700	OFF	
		P26.4 – Anybus / ModbusTCP / EtherNetIP	–	Address Serial Number Firmware Version Connection	Read	–	–	–	–
		P26.5 – Timeout	ms	0 to 60,000	R/W	15808	3DC0	5,000	
		P26.6 – Communications Shutdown	toggle	OFF / ON	R/W	53802	D22A	ON	
	(P27) [detailed info starts page 3–92; **See important P27.0 & P27.2 PASSCODE WARNINGS!**]	***P27.0 – Reset Defaults***	***–***	***Yes / No***	***R/W***	***62080***	***F280***	***No***	
		P27.1 – About	–	SR55 model #, serial #, software versions	Read	–	–	–	–
		P27.2 – Screen Lock	toggle	OFF / ON	R/W	12992	32C0	OFF	
		P27.3 – Date Format	–	dd/mm/yyyy mm/dd/yyyy	R/W	13248	33C0	dd/mm/yyyy	
		P27.4 – Temperature Format	degrees	°C / °F	R/W	13312	3400	°C	
		P27.5 – Parameters to USB		***Yes / No***	***R/W***	***62272***	***F340***	***No***	
		P27.6 – Parameters from USB		***Yes / No***	***R/W***	***62336***	***F380***	***No***	
		P27.7 – Service Code	for manufacturer's use only			13120	3340		

Parameters from "Auto Reset" Menu Category – Summary

Summary – Parameters for Touchscreen Setup – Auto Reset Category									
	Group	**Parameter**	**Units**	**Range**	**Read / Write**	**Modbus**		**Default Setting**	**User Setting**
						Address	**Hex**		
Category – Auto Reset		Auto Reset	N/A	OFF/ON	R/W	20736	5100	Off	
		Reset Delay	s	0 to 7200	R/W	20737	5101	0	
		Reset Attempts	N/A	0 to 10	R/W	14144	3740	0	
		Trip Free Time	s	0 to 7200	R/W	20736	5100	600	
		Input Side Phase Loss	N/A	OFF/ON	R/W	20800	5140	ON	
		Thermal	N/A	OFF/ON	R/W	20801	5141	ON	
		Thyristor Firing	N/A	OFF/ON	R/W	20802	5142	ON	
		Motor Side Phase Loss	N/A	OFF/ON	R/W	20803	5143	ON	
		Control Voltage Low	N/A	OFF/ON	R/W	20805	5145	ON	
		Sensing Fault	N/A	OFF/ON	R/W	20806	5146	ON	
		Fan	N/A	OFF/ON	R/W	20809	5149	ON	–
		Low Current	N/A	OFF/ON	R/W	20810	514A	ON	
		Current Limit Time Out	N/A	OFF/ON	R/W	20811	514B	ON	
		Overload	N/A	OFF/ON	R/W	20812	514C	ON	
		Shearpin	N/A	OFF/ON	R/W	20813	514D	ON	–
		PTC Thermistor	N/A	OFF/ON	R/W	20814	514E	ON	
		External	N/A	OFF/ON	R/W	20815	514F	ON	
		Communications	N/A	OFF/ON	R/W	20813	5150	ON	
		Bypass	N/A	OFF/ON	R/W	20817	5151	ON	
		Cover	N/A	OFF/ON	R/W	20818	5152	OFF	
		Phase Rotation	N/A	OFF/ON	R/W	20820	5154	OFF	
		Operation 4	N/A	OFF/ON	R/W	20821	5155	ON	
		Current Sensor	N/A	OFF/ON	R/W	20822	5156	ON	
		Operation 3	N/A	OFF/ON	R/W	20823	5157	ON	
		Operation 1	N/A	OFF/ON	R/W	20824	5158	ON	
		Operation 2	N/A	OFF/ON	R/W	20825	5159	ON	
		Operation 5	N/A	OFF/ON	R/W	20826	515A	ON	

Block Transfer Parameters

Parameters P0.20~P0.35 and P0.40~P0.55

NOTE: These Block Transfer parameters can only be accessed through Modbus; not through the Touchscreen Menu.

Block Transfer allows parameters from many different Parameter Groups to be consolidated into one Modbus communication message. This procedure can greatly simplify PLC programming and reduce network traffic. A maximum of 16 parameters can be grouped together into one block. The sixteen (16) two-byte Block Transfer Address Pointer Registers have 16 correlating four-byte Block Transfer Data Registers that correspond with the Pointer registers. The Pointer registers act as the data conduits for each select address. Once set, the addresses can be saved in non-volatile memory if required.

- *Pointer Parameters P0.20~P0.35 are where to enter the addresses that you want to consolidate.*
- *Data Location Parameters P0.40~P0.55 are locations to push data into, or to pull data out of.*

The following table shows the relationship between the Transfer registers and Data registers:

SR55 Parameters Summary – Serial Communication Parameters – Block Transfer Parameter Map													
Block Transfer Address Pointers							***Block Transfer Data***						
Address Description	***Para-meter***	***Range***	***Read/ Write***	***Modbus Address***		***Default Setting***	***Address Description***	***Para-meter***	***Range***	***Read/ Write***	***Modbus Address***		***Default Setting***
				Address	***Hex***						***Address***	***Hex ****	
Transfer 1	***P0.20***	0~65535	R/W	17600	44C0	OFF	Data 1	***P0.40***	0~ 4,294,967,295	R/W	17664	4500	OFF
Transfer 2	***P0.21***			17601	44C1	OFF	Data 2	***P0.41***			17666	4502	OFF
Transfer 3	***P0.22***			17602	44C2	OFF	Data 3	***P0.42***			17668	4504	OFF
Transfer 4	***P0.23***			17603	44C3	OFF	Data 4	***P0.43***			17670	4506	OFF
Transfer 5	***P0.24***			17604	44C4	OFF	Data 5	***P0.44***			17672	4508	OFF
Transfer 6	***P0.25***			17605	44C5	OFF	Data 6	***P0.45***			17674	450A	OFF
Transfer 7	***P0.26***			17606	44C6	OFF	Data 7	***P0.46***			17676	450C	OFF
Transfer 8	***P0.27***			17607	44C7	OFF	Data 8	***P0.47***			17678	450E	OFF
Transfer 9	***P0.28***			17608	44C8	OFF	Data 9	***P0.48***			17680	4510	OFF
Transfer 10	***P0.29***			17609	44C9	OFF	Data 10	***P0.49***			17682	4512	OFF
Transfer 11	***P0.30***			17610	44CA	OFF	Data 11	***P0.50***			17684	4514	OFF
Transfer 12	***P0.31***			17611	44CB	OFF	Data 12	***P0.51***			17686	4516	OFF
Transfer 13	***P0.32***			17612	44CC	OFF	Data 13	***P0.52***			17688	4518	OFF
Transfer 14	***P0.33***			17613	44CD	OFF	Data 14	***P0.53***			17690	451A	OFF
Transfer 15	***P0.34***			17614	44CE	OFF	Data 15	***P0.54***			17692	451C	OFF
Transfer 16	***P0.35***			17615	44CF	OFF	Data 16	***P0.55***			17694	451E	OFF

The address registers can take any data type that can fit into four (4) bytes, so any address that yields six (6) bytes of data (such as time) will be incomplete. For accessing data that is more than four (4) bytes, that register should be read from or written to directly, rather than by the Block Transfer method.

Block Transfer Example

The following table shows an example of different data sizes:

Block Transfer Example						
Transfer Address	***Parameter***	***Data Address***	***Data Shown in 4 Bytes***			
17600	P3.3 – Start Current Limit Level	17664	0x00	0x00	0xe8	0x6c
17601	P3.4 – Start Current Limit Time	17666	0x00	0x00	0x01	0x0e
17602	P3.1 – Start Pedestal	17668	0x00	0x00	0x0c	0xcd
17603	P6.0 – iERS (enable)	17670	0x00	0x00	0x00	0x00
17604	P6.2 – iERS Rate	17672	0x00	0x00	0x00	0x00
17605	P15.17 – Start Saving Level	17674	0x00	0x00	0x00	0x00

Parameter Details

This section describes the individual parameters and the functions that they perform.

SR55 parameters are defined as holding type registers.

Parameters Not Configurable Through Touchscreen Menu

These parameters are configurable only through network communications.

Parameters Associated With Digital Inputs

*P0.0 – **Start/Stop** (Digital Input Control Command Function)*

Hold. Reg. Type: Read/Write

Description:

Starts or Stops the SR55.

- To map to digital input, refer to P10.2, P10.4, P10.6.

Range:	*Modbus Decimal Value:*	*Default (decimal):*
• Off : Stops or Soft Stops the SR55.	• 0	• Off (0)
• On : Starts the SR55.	• 1	

Modbus Address: 17920 (4600 hex)

Modbus Format: 16-bit unsigned

Touchscreen Menu Path: none

*P0.1 – **Freeze Ramp** (Digital Input Control Command Function)*

Hold. Reg. Type: Read/Write

Description:

If set to On, this parameter will hold the Start Ramp even if "Current I_{rms}" is less than the "Current Limit Level."

- To map to digital input, refer to P10.2, P10.4, P10.6.

Range:	*Modbus Decimal Value:*	*Default (decimal):*
• Off : The Soft Start Ramp is not held and the SR55 will start in the time set.	• 0	• Off (0)
• On : The Soft Start Ramp is held and the SR55 will take longer than the time set to start.	• 1	

Modbus Address: 18240 (4740 hex)

Modbus Format: 16-bit unsigned

Touchscreen Menu Path: none

*P0.2 – **Reset** (Digital Input Control Command Function)*

Hold. Reg. Type: Read/Write

Description:

To reset pulse high and then low when resetting using communications.

- If using the touchscreen, the Start button will change to a Reset button during a fault condition.
- Clear the fault and press Reset.
- To map to digital input, refer to P10.2, P10.4, P10.6.

Range:	*Modbus Decimal Value:*	*Default (decimal):*
• Off : The final state required for a reset.	• 0	• Off (0)
• On : The initial state required for a reset.	• 1	

Modbus Address: 18368 (47C0 hex)

Modbus Format: 16-bit unsigned

Touchscreen Menu Path: none

Parameter Details – Not Configurable Through Touchscreen – Associated With Digital Inputs (continued)

*P0.3 – **External Trip** (Digital Input Control Command Function)*

Hold. Reg. Type: Read/Write

Description:

Control command for Digital Input: External Trip.

- Ensure start signal is low before reset.
- To map to digital input, refer to P10.2, P10.4, P10.6.

Range:	*Modbus Decimal Value:*	*Default (decimal):*
• Off : The SR55 will not trip.	• 0	• Off (0)
• On : If "External Trip" is enabled, the SR55 trips.	• 1	

Modbus Address: 18880 (49C0 hex)

Modbus Format: 16-bit unsigned

Touchscreen Menu Path: none

Parameters Associated With Digital Outputs

*P0.4 – **Ready***

Hold. Reg. Type: Read Only

Description:

STATUS INDICATION : Ready

- To map to Digital Output, refer to P11.0, P11.2, P11.4, P11.6.

Range:	*Modbus Decimal Value:*	*Default (decimal):*
• Off : The SR55 has not powered up successfully, or failed to reset from a trip.	• 0	• Off (0)
• On : Indicates that the SR55 is healthy and ready for a start. Remains on when Running.	• 1	

Modbus Address: 37184 (9140 hex)

Modbus Format: 16-bit unsigned

Touchscreen Menu Path: none

*P0.5 – **Enabled***

Hold. Reg. Type: Read Only

Description:

STATUS INDICATION : Enabled

- To map to Digital Output, refer to P11.0, P11.2, P11.4, P11.6.

Range:	*Modbus Decimal Value:*	*Default (decimal):*
• Off : The SR55 has not powered up successfully, or failed to reset from a trip.	• 0	• Off (0)
• On : Indicates that the SR55 is enabled and ready for a start. Remains on when Running.	• 1	

Modbus Address: 37248 (9180 hex)

Modbus Format: 16-bit unsigned

Touchscreen Menu Path: none

Parameter Details – Not Configurable Through Touchscreen – Associated With Digital Outputs (continued)

*P0.6 – **Error***

Hold. Reg. Type: Read Only

Description:

STATUS INDICATION : Error. The fault must be cleared before a reset.

- To map to Digital Output, refer to P11.0, P11.2, P11.4, P11.6.

Range:	*Modbus Decimal Value:*	*Default (decimal):*
• Off : The SR55 is fault free.	• 0	• Off (0)
• On : Indicates that SR55 has detected a fault and has shut down.	• 1	

Modbus Address: 37312 (91C0 hex)

Modbus Format: 16-bit unsigned

Touchscreen Menu Path: none

*P0.7 – **Running***

Hold. Reg. Type: Read Only

Description:

STATUS INDICATION : Running

- To map to Digital Output, refer to P11.0, P11.2, P11.4, P11.6.

Range:	*Modbus Decimal Value:*	*Default (decimal):*
• Off : The SR55 has detected a fault and tripped, or has been stopped.	• 0	• Off (0)
• On : Indicates that the motor is running and is being actively controlled by the SR55.	• 1	

Modbus Address: 37632 (9300 hex)

Modbus Format: 16-bit unsigned

Touchscreen Menu Path: none

*P0.8 – **End Of Start***

Hold. Reg. Type: Read Only

Description:

STATUS INDICATION : End Of Start

- To map to Digital Output, refer to P11.0, P11.2, P11.4, P11.6.

Range:	*Modbus Decimal Value:*	*Default (decimal):*
• Off : The SR55 is disabled or ramping down.	• 0	• Off (0)
• On : Indicates that the Soft Start ramp has been completed.	• 1	

Modbus Address: 37760 (9380 hex)

Modbus Format: 16-bit unsigned

Touchscreen Menu Path: none

*P0.9 – **Current Limit***

Hold. Reg. Type: Read Only

Description:

STATUS INDICATION : Current Limit

- To map to Digital Output, refer to P11.0, P11.2, P11.4, P11.6.

Range:	*Modbus Decimal Value:*	*Default (decimal):*
• Off : The ramp is not being held because " Current I_{rms} " is less than "Current Limit Level."	• 0	• Off (0)
• On : The ramp is being held because "Current I_{rms}" is greater or equal to "Current Limit Level."	• 1	

Modbus Address: 37824 (93C0 hex)

Modbus Format: 16-bit unsigned

Touchscreen Menu Path: none

Parameter Details – Not Configurable Through Touchscreen – Associated With Digital Outputs (continued)

*P0.10 – **iERS Active***

Hold. Reg. Type: Read Only

Description:

STATUS INDICATION : iERS Active

- To map to Digital Output, refer to P11.0, P11.2, P11.4, P11.6.

Range:	*Modbus Decimal Value:*	*Default (decimal):*
• Off : The iERS saving mode has been disabled either internally or via "iERS."	• 0	• Off (0)
• On : Indicates that the SR55 is operating in the iERS energy saving Mode.	• 1	

Modbus Address: 38080 (94C0 hex)

Modbus Format: 16-bit unsigned

Touchscreen Menu Path:

none

P0.12 – I/O Status Register

Hold. Reg. Type: Read Only

Description:

Displays the current status of the hardware inputs and outputs.

b0 (Input D1-1I)	b1 (Input D1-2I)	b2 (input D2-1I)	b3 (undefined)
b4 (Output 12)	b5 (Output 24)	b6 (Output 34)	b7 (Output 44)

Range:	*Modbus Decimal Value:*	*Default (decimal):*
• 0 to 255	• 0	• OFF (0)
	• 1	

Modbus Address: 62016 (F240 hex)

Modbus Format: 16-bit unsigned

Touchscreen Menu Path:

none

Parameters Associated With Block Transfers

P0.20~P0.35 – Block Transfer Address Pointers

Hold. Reg. Type: Read/Write

Description:

Address pointers for data block transfer.

- For details, please refer to "Block Transfer Parameters" on page 3–24.

Range:
- 0~65535

Modbus Decimal Value:
- 65535

Default (decimal):
- Off (0)

Modbus Addresses:

17600 (44C0 hex)
17601 (44C1 hex)
17602 (44C2 hex)
17603 (44C3 hex)
17604 (44C4 hex)
17605 (44C5 hex)
17606 (44C6 hex)
17607 (44C7 hex)
17608 (44C8 hex)
17609 (44C9 hex)
17610 (44CA hex)
17611 (44CB hex)
17612 (44CC hex)
17613 (44CD hex)
17614 (44CE hex)
17615 (44CF hex)

Modbus Format:
16-bit unsigned

Touchscreen Menu Path:
none

P0.40~P0.55 – Block Transfer Data Locations

Hold. Reg. Type: Read/Write

Description:

Data locations for data block transfer.

- For details, please refer to "Block Transfer Parameters" on page 3–24.

Range:
- 0~4,294,967,295

Modbus Decimal Value:
- 4,294,967,295

Default (decimal):
- Off (0)

Modbus Addresses:

P0.40	17664/17665 (4500/4501 hex)
P0.41	17666/17667 (4502/4503 hex)
P0.42	17668/17669 (4504/4505 hex)
P0.43	17670/17671 (4506/4507 hex)
P0.44	17672/17673 (4508/4509 hex)
P0.45	17674/17675 (450A/450B hex)
P0.46	17676/17677 (450C/450D hex)
P0.47	17678/17679 (450E/450F hex)
P0.48	17680/17681 (4510/4511 hex)
P0.49	17682/17683 (4512/4513 hex)
P0.50	17684/17685 (4514/4515 hex)
P0.51	17686/17687 (4516/4517 hex)
P0.52	17688/17689 (4518/4519 hex)
P0.53	17690/17691 (451A/451B hex)
P0.54	17692/17693 (451C/451D hex)
P0.55	17694/17695 (451E/451F hex)

Modbus Format:
32-bit unsigned

Touchscreen Menu Path:
none

Parameter Details (continued)

Parameters in Sequence and Grouped by Touchscreen Navigation

SR55 parameters are defined as holding type registers.

"Auto Setup" Menu of Parameters

*P0.11 – **Application***

Holding Register Type: Read/Write

Description:

- The SR55 has numerous built-in preset applications. Select the application best suited to your load. The selected application will automatically change several parameters and functions. Depending on the application loaded, the "Trip Class" may also change.
- Refer to the previous "Auto Setup Parameter Settings" table for more details (page 3–4).

Range: See the previous "Auto Setup Parameter Settings" table (page 3–4).

Modbus Decimal Value: n/a

Default (decimal): Default (0)

Modbus Address: 19200 (4B00 hex)

Modbus Format: 16-bit unsigned

Touchscreen Menu Path:
Home → Auto Setup → Application

*P5.1 – **Trip Class***

Holding Register Type: Read/Write

Description:

- The trip class is a numeric value that correlates the trip time with overload level. Select Trip class according to application requirements.
- The trip time depends on the selected Trip Class, the duration of the overload and the level of the overcurrent. Refer to the Motor Overload 'cold' trip curves given in the Quick-Start Guide.
- When "Class 20" or "Class30" are selected, the SR55 current rating will be reduced to a lower value.

Range:
- 10
- 20
- 30

Modbus Decimal Value:
- 10
- 20
- 30

Default (decimal):
- 10 (10)

Modbus Address: 25664 (6440 hex)

Modbus Format: 16-bit unsigned

Touchscreen Menu Path:
Home → Auto Setup → Application → Trip Class
(also Home → Advanced → Motor Protection → Trip Class)
(also automatically set in "Auto Setup" mode, depending on the application selected)

*P5.0 – **Motor Current***

Hold. Reg. Type: Read/Write

Description:

- This should be set to the Full Load Current shown on the motor plate.
- The overload works with multiples of the set "Motor Current" (also referred to as Motor FLA).

Range: 10% to 100% of SR55 rated current (displayed in amps)

Modbus Decimal Value: linear scale: 1 = 1mA

Default: 100%

Modbus Address: 25728/2529 (6480/6481 hex)

Modbus Format: 32-bit unsigned

Touchscreen Menu Path:
Home → Auto Setup → Motor Current
(also Home → Advanced → Motor Protection → Motor Current)

Parameter Details – "Auto Setup" Menu of Parameters (continued)

*P7.0 – **Control Method*** — *Holding Register Type:* Read/Write

Description:

- Local Touch Screen : Control using the buttons on the keypad.
- User Programmable : Control using the terminals, function defined in "I/O" menu.
- Two Wire Control : Control using terminals; functions fixed as shown on screen.
  D1-1I = High: Reset & Start / Low: Stop
- Three Wire Control : Control using terminals; functions fixed as shown on screen.
  D1-1I = High Start
  D1-2I = Low Stop
  D2-1I = High Reset
- Modbus Network : Control via remote Modbus network or remote touchscreen.

Range:	*Modbus Decimal Value:*	*Default (decimal):*
• Local Touch Screen	• 0	• Local (0)
• User Programmable	• 1	
• Two Wire Control	• 2	
• Three Wire Control	• 3	
• Modbus Network	• 4	

Modbus Address: 59392 (E800 hex)

Modbus Format: 16-bit unsigned

Touchscreen Menu Path:
Home → Auto Setup → Control Method
(also Home → Advanced → Control Method) (also Home → I/O → Digital Inputs → Control Method)

*P10.0 – **Digital Input Voltage*** — *Hold. Reg. Type:* Read/Write

Description:

The digital inputs D1-1I, D1-2I, D2-1I are designed to work with a range of control supplies.

- It is important to ensure the "Digital Input Voltage" corresponds to the voltage applied to the input. ***Failure to do so may result in damage.***

Range:	*Modbus Decimal Value:*	*Default (decimal):*
• 230VAC : 'Active high level' Input voltage must be in the range 195.5V–253V.	• 0	• 230VAC (0)
• 110VAC : 'Active high level' Input voltage must be in the range 93.5V–121V.	• 1	
• 24VDC : 'Active high level' input voltage must be in the range 20.4V–26.4V.	• 2	

Modbus Address: 10880 (2A80 hex)

Modbus Format: 16-bit unsigned

Touchscreen Menu Path:
Home → Auto Setup → Digital Input Voltage
(also Home → I/O → Digital Inputs → Digital Input Voltage)

"Advanced" Menu of Parameters

*P1.0 – **Save Parameters*** — Hold. Reg. Type: Read/Write

Description:

Saves all Read/Write parameters to non-volatile memory.
Note: This does not save the parameters to an external USB drive.

Range:	Modbus Decimal Value:	Default (decimal):
• No : Parameters remain unchanged.	• 0	• No (0)
• Yes : Parameters are written.	• 1	

Modbus Address:

Modbus Format:

Touchscreen Menu Path:

Advanced "Automatic Settings" Parameters

*P2.0 – **Automatic Pedestal*** — Hold. Reg. Type: Read/Write

Description:

Automatically controls the starting torque by adjusting the start voltage.

Range:	Modbus Decimal Value:	Default (decimal):
• Off : The initial torque is defined by the "Start Pedestal."	• 0	• Off (0)
• On : The initial torque is increased until the motor starts to rotate at a moderate speed.	• 1	

Modbus Address: 19840 (4D80 hex)

Modbus Format: 16-bit unsigned

Touchscreen Menu Path:

Home → Advanced → Automatic Settings → Automatic Pedestal

*P2.1 – **Automatic Ramp*** — Hold. Reg. Type: Read/Write

Description:

Automatically controls the torque applied to the motor during the soft start by automatically adjusting "Start Time" and "Current Limit."

Range:	Modbus Decimal Value:	Default (decimal):
• Off : The ramp time depends on the "Start Time" and "Current Limit."	• 0	• Off (0)
• On : The torque is adjusted to suit the load.	• 1	

Modbus Address: 20352 (4F80 hex)

Modbus Format: 16-bit unsigned

Touchscreen Menu Path:

Home → Advanced → Automatic Settings → Automatic Ramp

*P2.2 – **Automatic End Start (1)*** — Hold. Reg. Type: Read/Write

Description:

Automatically controls the time taken for the motor to start.

Range:	Modbus Decimal Value:	Default (decimal):
• Off : The ramp time depends on the "Start Time" and "Current Limit."	• 0	• Off (0)
• On : The ramp time is shortened if the motor is at speed before the end of the "Start Time."	• 1	

Modbus Address: 19968 (4E00 hex)

Modbus Format: 16-bit unsigned

Touchscreen Menu Path:

Home → Advanced → Automatic Settings → Automatic End Start (1)

Parameter Details – "Advanced" Menu of Parameters (continued)

P2.3 – Automatic Stop — Hold. Reg. Type: Read/Write

Description:
Automatically controls the soft stop to suit the application.
This feature is particularly useful with pumping applications

Range:	Modbus Decimal Value:	Default (decimal):
• Off : The deceleration to the point where the soft stop becomes useful will be slower.	• 0	• Off (0)
• On : If the motor is lightly loaded it decelerates rapidly to the point where the soft stop becomes useful.	• 1	

Modbus Address: 20160 (4EC0 hex)
Modbus Format: 16-bit unsigned
Touchscreen Menu Path:
Home → Advanced → Automatic Settings → Automatic Stop

P2.4 – Automatic Stop Profile — Type: Read/Write

Description:
Adjusts the response of the "Automatic Stop."
- Increase if the motor speed doesn't drop quickly enough.
- When the value is set to zero, the "Automatic Stop" is effectively disabled.

Range:	Modbus Decimal Value:	Default:
0% – 100%	linear scale (1 = 0.006104 %) 0% – 100% = (0 – 16384) x% / 0.006104% = Modbus dec. value EX: Modbus value of 2900 = 17.7016%	50%

Modbus Address: 20608 (5080 hex)
Modbus Format: 16-bit unsigned
Touchscreen Menu Path:
Home → Advanced → Automatic Settings → Automatic Stop Profile

P2.5 – Automatic End Stop — Hold. Reg. Type: Read/Write

Description:
Automatically controls the "Stop Time."

Range:	Modbus Decimal Value:	Default (decimal):
• Off : The ramp time depends on the "Stop Time" and "Current Limit."	• 0	• Off (0)
• On : The ramp time is shortened if the motor reaches a very low speed before the end of the "Stop Time."	• 1	

Modbus Address: 20416 (4FC0 hex)
Modbus Format: 16-bit unsigned
Touchscreen Menu Path:
Home → Advanced → Automatic Settings → Automatic End Stop

P2.6 – Automatic Impact Load — Hold. Reg. Type: Read/Write

Description:
Automatically controls the maximum iERS saving level.

Range:	Modbus Decimal Value:	Default (decimal):
• Off : The saving potential may be reduced on applications with heavy load cycles , such as injection molding machines.	• 0	• Off (0)
• On : The maximum iERS saving level ("BackStop") is reset to maximum during each load cycle.	• 1	

Modbus Address: 20480 (5000 hex)
Modbus Format: 16-bit unsigned
Touchscreen Menu Path:
Home → Advanced → Automatic Settings → Automatic Impact Load

Parameter Details – "Advanced" Menu of Parameters (continued)

*P2.7 – **Auto Smooth Stop*** — Hold. Reg. Type: Read/Write

Description:

Automatically controls the soft stop to eliminate oscillations that can occur towards the end of the ramp.

Range:	Modbus Decimal Value:	Default (decimal):
• Off : The soft stop is not adjusted, and torque fluctuations may cause instability. This can often occur in pumping applications.	• 0	• Off (0)
• On : The soft stop is adjusted when oscillations are detected. Refer to "Auto smoothing Level."	• 1	

Modbus Address: 20224 (4F00 hex)

Modbus Format: 16-bit unsigned

Touchscreen Menu Path:

Home → Advanced → Automatic Settings → Auto Smooth Stop

*P2.8 – **Auto Smoothing Level*** — Type: Read/Write

Description:

Adjusts the response of the "Automatic smoothing."

- Increase to provide a greater smoothing effect if there are torque fluctuations that occur during the soft stop.
- When set to zero, the smoothing is effectively disabled.

Range:	Modbus Decimal Value:	Default:
10% – 100%	linear scale (1 = 0.006104 %) 10% – 100% = (1638 – 16384) x% / 0.006104% = Modbus dec. value EX: Modbus value of 2900 = 17.7016%	50%

Modbus Address: 20672 (50C0 hex)

Modbus Format: 16-bit unsigned

Touchscreen Menu Path:

Home → Advanced → Automatic Settings → Auto Smoothing Level

*P2.9 – **Automatic End Start (2)*** — Hold. Reg. Type: Read/Write

Description:

Automatically controls the time taken for the motor to start.

Range:	Modbus Decimal Value:	Default (decimal):
• Off : The ramp time depends on the "Start Time" and "Current Limit."	• 0	• Off (0)
• On : The ramp time is shortened if the motor current falls below the current limit level before the end of the "Start Time."	• 1	

Modbus Address: 19904 (4DC0 hex)

Modbus Format: 16-bit unsigned

Touchscreen Menu Path:

Home → Advanced → Automatic Settings → Automatic End Start (2)

Parameter Details – "Advanced" Menu of Parameters (continued)

*P2.10 – **Automatic End Start (3)*** — Hold. Reg. Type: Read/Write

Description:

Automatically controls the time taken for the motor to start.

Range:	Modbus Decimal Value:	Default (decimal):
• Off : The ramp time depends on the "Start Time" and "Current Limit."	• 0	• Off (0)
• On : The ramp time is shortened if torque fluctuations occur before the end of the "Start Time."	• 1	

Modbus Address: 20032 (4E40 hex)

Modbus Format: 16-bit unsigned

Touchscreen Menu Path:

Home → Advanced → Automatic Settings → Automatic End Start (3)

*P2.11 – **Rate End Start (3)*** — Type: Read/Write

Description:

Adjusts the response of the "Automatic End Start(3)."

- Increase to provide a greater smoothing effect if torque fluctuations occur during the soft start.
- When set to zero, the smoothing is effectively disabled.

Range: 0% – 100%

Modbus Decimal Value: linear scale (1 = 0.006104 %)
0% – 100% = (0 – 16384)
x% / 0.006104% = Modbus dec. value
EX: Modbus value of 2900 = 17.7016%

Default: 50%

Modbus Address: 768 (300 hex)

Modbus Format: 16-bit unsigned

Touchscreen Menu Path:

Home → Advanced → Automatic Settings → Rate End Start (3)

Advanced "Start Settings" Parameters

*P3.0 – **Start Time*** — Type: Read/Write

Description:

Time taken to soft start from the "Start Pedestal" to the end of the start.

- Normally set between 5 and 30 seconds.
- Actual time to get to full voltage depends on the "Start Current Limit Level."
- If set too long the motor can be at speed before the end of the time set; refer to "Automatic End Start."

Range: 1s – 300s

Modbus Decimal Value: Linear Scaling (1 = 1s)

Default: 10s

Modbus Address: 7104 (1BC0 hex)

Modbus Format: 16-bit unsigned

Touchscreen Menu Path:

Advanced - Start Settings - Start Time

Parameter Details – "Advanced" Menu of Parameters (continued)

P3.1 – Start Pedestal

Hold. Reg. Type: Read/Write

Description:

- Percentage of the supply voltage applied to motor at the beginning of the soft start.
- Increase to provide more torque If the load fails to break away.
- Decrease if the motor accelerates too quickly.

Range: 10% – 100%

Modbus Decimal Value: linear scale (1 = 0.006104 %)
10% – 100% = (1638 – 16384)
x% / 0.006104% = Modbus dec. value
EX: Modbus value of 2900 = 17.7016%

Default: 20%

Modbus Address: 704 (2C0 hex)

Modbus Format: 16-bit unsigned

Touchscreen Menu Path:
Home → Advanced → Start Settings → Start Pedestal

P3.2 – Start Current Limit Trip

Hold. Reg. Type: Read/Write

Description:
Selects between trip or continue if the current limit has been active for too long.

Range:	Modbus Decimal Value:	Default (decimal):
• Off : The start will continue regardless of the motor current level.	• 0	
• On : The SR55 will trip. This trip is constrained by the Start Current Limit Level and the Start Current Limit Time.	• 1	• On (1)

Modbus Address: 53790 (D21E hex)

Modbus Format: 16-bit unsigned

Touchscreen Menu Path:
Home → Advanced → Start Settings → Start Current Limit Trip
(also Home → Advanced → Trip Settings → Start Current Limit Trip)

P3.3 – Start Current Limit Level

Holding Register Type: Read/Write

Description:
The current in Amps which the soft start ramp is not allowed to go above.

- Normally set to 350% of motor FLA.
- Increase if motor fails to accelerate at required rate.
- The "Current Limit Level" will effect actual time to start. If set too low the motor may not accelerate to full speed.

Range: 100% motor FLA – 450% SR55 rated A

Modbus Decimal Value: Linear Scale (1 = 1mA)

Default: 350% motor FLA

Modbus Address: 26880 (6900 hex)

Modbus Format: 16-bit unsigned

Touchscreen Menu Path:
Home → Advanced → Start Settings → Start Current Limit → Start Current Limit Level

P3.4 – Start Current Limit Time

Holding Register Type: Read/Write

Description:
The maximum time allowed for the current limit.

- If the current limit is still active at the end of this period the SR55 will either 'trip' or 'continue.'

Range:

- 1s – 300s

Modbus Decimal Value: Linear Scale (1 = 1s)

Default: 30s

Modbus Address: 26944 (6940 hex)

Modbus Format: 16-bit unsigned

Touchscreen Menu Path:
Home → Advanced → Start Settings → Start Current Limit → Start Current Limit Time

Parameter Details – "Advanced" Menu of Parameters (continued)

*P3.5 – **Kick Start***

Hold. Reg. Type: Read/Write

Description:

Applies a short duration torque pulse to dislodge 'sticky' loads.

Range:	*Modbus Decimal Value:*	*Default (decimal):*
• Off : The initial starting torque is defined by the "Start Pedestal."	• 0	• Off (0)
• On : The torque pulse is applied at start-up, when complete the torque drops to the "Start Pedestal."	• 1	

Modbus Address: 320 (140 hex)

Modbus Format: 16-bit unsigned

Touchscreen Menu Path:

Home → Advanced → Start Settings → Kick Start
(also Home → Advanced → Start Settings → Kick Start → Kick Start)

*P3.6 – **Kick Start Time***

Type: Read/Write

Description:

Time that the torque pulse is applied to load.

- Increase to provide more torque If the load fails to break away.
- Decrease if the motor accelerates too quickly.

Range:	*Modbus Decimal Value:*	*Default:*
10ms – 2000ms	linear scale (1 = 1 ms)	100ms

Modbus Address: 7040 (1B80 hex)

Modbus Format: 16-bit unsigned

Touchscreen Menu Path:

Home → Advanced → Start Settings → Kick Start Time
(also Home → Advanced → Start Settings → Kick Start → Kick Start Time)

*P3.7 – **Kick Start Pedestal***

Type: Read/Write

Description:

Percentage of the supply voltage applied to the motor during the 'kick' period.

- Increase to provide more torque If the load fails to break away.
- Decrease if the motor accelerates too quickly.

Range:	*Modbus Decimal Value:*	*Default:*
30% – 80%	linear scale (1 = 0.006104 %) 30% – 80% = (4915 – 13106) x% / 0.006104% = Modbus dec. value EX: Modbus value of 10500 = 64.09%	75%

Modbus Address: 640 (280 hex)

Modbus Format: 16-bit unsigned

Touchscreen Menu Path:

Home → Advanced → Start Settings → Kick Start → Kick Start Pedestal

*P3.8 – **Contactor Delay***

Type: Read/Write

Description:

Time allowed for external line-side contactors to close before soft start begins.

- Increase if contactors are driven by buffer relays or motor trips on phase loss when start signal applied.
- Decrease if response to start signal needs to be improved.

Range:	*Modbus Decimal Value:*	*Default:*
20ms – 800ms	linear scale (1 = 1 ms)	160ms

Modbus Address: 8320 (2080 hex)

Modbus Format: 16-bit unsigned

Touchscreen Menu Path:

Home → Advanced → Start Settings → Contactor Delay

Parameter Details – "Advanced" Menu of Parameters (continued)

Advanced "Stop Settings" Parameters

*P4.0 – **Stop Time***

Type: Read/Write

Description:

Normally set between 15 and 60 seconds.

- Actual time to get to 'Stop Pedestal' depends on the ""Stop Current Limit Level."
- If set too long motor may reach zero speed before the end of the time set; refer to "Automatic End Stop."

Range: 0s – 300s

Modbus Decimal Value: linear scale (1 = 1 s)

Default: 0s

Modbus Address: 7296 (1C80 hex)

Modbus Format: 16-bit unsigned

Touchscreen Menu Path:

Home → Advanced → Stop Settings → Stop Time

*P4.1 – **Stop Pedestal***

Type: Read/Write

Description:

Percentage of the supply voltage applied to the motor at the end of the soft stop.

- Increase if the motor crawls at the end of the soft stop.
- Decrease if greater soft-stop effect is required at end of ramp.

Range: 10% – 40%

Modbus Decimal Value: linear scale (1 = 0.006104 %)
10% – 40% = (1638 – 6553)
x% / 0.006104% = Modbus dec. value
EX: Modbus value of 5250 = 32.05%

Default: 10%

Modbus Address: 896 (380 hex)

Modbus Format: 16-bit unsigned

Touchscreen Menu Path:

Home → Advanced → Stop Settings → Stop Pedestal

*P4.2 – **Stop Current Limit Trip***

Hold. Reg. Type: Read/Write

Description:

Selects between 'trip' or 'continue' if the current limit has been active for too long.

Range:	*Modbus Decimal Value:*	*Default (decimal):*
Off : The stop will continue regardless of the motor current level.	• 0	• Off (0)
On : The SR55 will trip. This trip is constrained by the Stop Current Limit Level and the Stop Current Limit Time. Motor will coast to stop when tripped.	• 1	

Modbus Address: 53791 (D21F hex)

Modbus Format: 16-bit unsigned

Touchscreen Menu Path:

Home → Advanced → Stop Settings → Stop Current Limit → Stop Current Limit Trip
(also Home → Advanced → Trip Settings → Stop Current Limit Trip)

Parameter Details – "Advanced" Menu of Parameters (continued)

*P4.3 – **Stop Current Limit Level*** — Type: Read/Write

Description:

The current in amps at which the soft stop ramp is not allowed to go above.

- Normally set to 350% motor FLA. Increase if motor decelerates too rapidly. Increasing this setting allows the motor to take longer to decelerate.
- The current limit level will effect actual time to stop the motor.

Range:	Modbus Decimal Value:	Default:
100% I-motor – 450% I-SR55	linear scale (1 = 1mA)	350% I-motor

Modbus Address:	Modbus Format:
28800 (7080 hex)	16-bit unsigned

Touchscreen Menu Path:

Home → Advanced → Stop Settings → Stop Current Limit → Stop Current Limit Level

*P4.4 – **Stop Current Limit Time*** — Type: Read/Write

Description:

The maximum time allowed for the current limit.

- If the current limit is still active at the end of this period the SR55 will either 'trip' or 'continue.'

Range:	Modbus Decimal Value:	Default:
1s – 300s	linear scale (1 = 1 s)	10s

Modbus Address:	Modbus Format:
28864 (70C0 hex)	16-bit unsigned

Touchscreen Menu Path:

Home → Advanced → Stop Settings → Stop Current Limit → Stop Current Limit Time

Advanced "Motor Protection" Parameters

*P5.0 – **Motor Current*** — Hold. Reg. Type: Read/Write

Description:

This should be set to the Full Load Current shown on the motor plate.

- The overload works with multiples of the set "Motor Current" (i-motor).
- Also referred to as Motor FLA.

Range:	Modbus Decimal Value:	Default:
10% I-rated – 100% I-rated	linear scale (1 = 1mA)	100% I-rated

Modbus Address:	Modbus Format:
25728/25729 (6480/6481 hex)	32-bit unsigned

Touchscreen Menu Path:

Home → Advanced → Motor Protection → Motor Current
(also Home → Auto Setup → Motor Current)

Parameter Details – "Advanced" Menu of Parameters (continued)

P5.1 – Trip Class

Hold. Reg. Type: Read/Write

Description:

- The trip class is a numeric value that correlates the trip time with overload level. Select "Trip Class" according to application requirements.
- The trip time depends on the selected Trip Class, the duration of the overload and the level of the overcurrent. Refer to the Motor Overload 'cold' trip curves given in the Quick-Start Guide.
- When "Class 20" or "Class30" are selected, the SR55 current rating will be reduced to a lower value.

Range:	Modbus Decimal Value:	Default (decimal):
• 10	• 10	• 10 (10)
• 20	• 20	
• 30	• 30	

Modbus Address: 25664 (6440 hex)

Modbus Format: 16-bit unsigned

Touchscreen Menu Path:

Home → Advanced → Motor Protection → Trip Class

P5.2 – Low Current Trip

Hold. Reg. Type: Read/Write

Description:

This can be used to detect if the motor is running lightly loaded.

Range:	Modbus Decimal Value:	Default (decimal):
• Off : The SR55 will continue to operate regardless of motor current.	• 0	• Off (0)
• On : The SR55 will trip when lower than expected current draw occurs. This trip is constrained by the Low Current Trip Level and the Low Current Trip Time. This feature is not active during soft start and soft stop.	• 1	

Modbus Address: 53787 (D21B hex)

Modbus Format: 16-bit unsigned

Touchscreen Menu Path:

Home → Advanced → Motor Protection → Low Current Settings → Low Current Trip
(also Home → Advanced → Trip Settings → Low Current Trip)

P5.3 – Low Current Trip Level

Type: Read/Write

Description:

The current in Amps that will cause a trip.

- A trip will occur if the motor current is less than the "Trip Level" for the "Trip Time."

Range:	Modbus Decimal Value:	Default:
25% I-motor – 100% I-motor	linear scale (1 = 1mA)	25% I-motor

Modbus Address: 26304 (66C0 hex)

Modbus Format: 16-bit unsigned

Touchscreen Menu Path:

Home → Advanced → Motor Protection → Low Current Settings → Low Current Trip Level

P5.4 – Low Current Trip Time

Type: Read/Write

Description:

The trip time for the Low current trip.

- A trip will occur if the motor current is less than the "Trip Level" for the "Trip Time."

Range:	Modbus Decimal Value:	Default:
100ms – 9000ms	linear scale (1 = 1 ms)	100ms

Modbus Address: 26368 (6700 hex)

Modbus Format: 16-bit unsigned

Touchscreen Menu Path:

Home → Advanced → Motor Protection → Low Current Settings → Low Current Trip Time

Parameter Details – "Advanced" Menu of Parameters (continued)

*P5.5 – **Shearpin Trip*** — *Hold. Reg. Type:* Read/Write

Description:

The shearpin is an electronic equivalent of a mechanical shearpin.

- This feature is not active during soft start and soft stop.

Range:	*Modbus Decimal Value:*	*Default (decimal):*
• Off : The SR55 will continue to operate regardless of motor current level.	• 0	
• On : The SR55 will trip. This trip is constrained by the Shearpin Trip Current and the Shearpin Trip Time.	• 1	• On (1)

Modbus Address: 53793 (D221 hex)

Modbus Format: 16-bit unsigned

Touchscreen Menu Path:

Home → Advanced → Motor Protection → Shearpin Settings → Shearpin Trip
(also Home → Advanced → Trip Settings → Shearpin Trip)

*P5.6 – **Shearpin Trip Current*** — *Type:* Read/Write

Description:

The current in Amps that will cause a "Shearpin Trip."

- A trip will occur if the motor current is greater than the "Trip Level" for the "Trip Time."

Range:	*Modbus Decimal Value:*	*Default:*
100% I-motor – 450% I-SR55	linear scale (1 = 1mA)	450% I-SR55

Modbus Address: 27584 (6BC0 hex)

Modbus Format: 16-bit unsigned

Touchscreen Menu Path:

Home → Advanced → Motor Protection → Shearpin Settings → Shearpin Trip Current

*P5.7 – **Shearpin Trip Time*** — *Type:* Read/Write

Description:

The trip time for the Shearpin trip.

- A trip will occur if the motor current is greater than the "Trip Level" for the "Trip Time."

Range:	*Modbus Decimal Value:*	*Default:*
100ms – 9000ms	linear scale (1 = 1 ms)	100ms

Modbus Address: 27648 (6C00 hex)

Modbus Format: 16-bit unsigned

Touchscreen Menu Path:

Home → Advanced → Motor Protection → Shearpin Settings → Shearpin Trip Time

*P5.8 – **Overload Trip*** — *Hold. Reg. Type:* Read/Write

Description:

The overload is an electronic equivalent to a thermal overload.
(See Overload parameter address 33408 for more information about Overload.)

Range:	*Modbus Decimal Value:*	*Default (decimal):*
• Off : The SR55 will continue to operate regardless of motor current level.	• 0	
• On : The SR55 will trip when the "Overload" capacity exceeds the motor current level chosen in Overload Level and Trip Class parameters.	• 1	• On (1)

Modbus Address: 53792 (D220 hex)

Modbus Format: 16-bit unsigned

Touchscreen Menu Path:

Home → Advanced → Motor Protection → Overload Settings → Overload Trip
(also Home → Advanced → Trip Settings → Overload Trip)

Parameter Details – "Advanced" Menu of Parameters (continued)

*P5.9 – **Overload Level*** — *Type:* Read/Write

Description:

Determines the level in Amps at which the overload will start.

- Normally set to 115% of the set motor current (i-motor).
- Reduce to speed up trip response.

Range:	*Modbus Decimal Value:*	*Default:*
50% I-motor – 125% I-motor	linear scale (1 = 1mA)	115% I-motor

Modbus Address:	*Modbus Format:*
28224 (6E40 hex)	16-bit unsigned

Touchscreen Menu Path:

Home → Advanced → Motor Protection → Overload Settings → Overload Level

Advanced "iERS" Parameters

*P6.0 – **iERS*** — *Hold. Reg. Type:* Read/Write

Description:

Enables and disables the intelligent Energy Recovery System feature (iERS).

Range:	*Modbus Decimal Value:*	*Default (decimal):*
Off : The feature is disabled and the motor operates at full voltage.	• 0	
On : The voltage to the motor will be regulated to ensure optimum efficiency.	• 1	• On (1) *

Modbus Address:	*Modbus Format:*
21120 (5280 hex)	16-bit unsigned

Touchscreen Menu Path:

Home → Advanced → iERS → iERS

** NOTE: iERS (P6.0) default setting is "OFF (0)" beginning in firmware version 59.35.*

*P6.1 – **Dwell Time*** — *Type:* Read/Write

Description:

The time from the end of the start to the point where the iERS saving mode becomes active.

- Normally set to 5 seconds to ensure that the motor is at full speed before the iERS saving becomes active.
- Increase to allow time for the motor to stabilize.

Range:	*Modbus Decimal Value:*	*Default:*
1s – 300s	linear scale (1 = 1 s)	5s

Modbus Address:	*Modbus Format:*
7360 (1CC0 hex)	16-bit unsigned

Touchscreen Menu Path:

Home → Advanced → iERS → Dwell Time

Parameter Details – "Advanced" Menu of Parameters (continued)

*P6.2 – **iERS Rate***

Type: Read/Write

Description:

Determines the rate at which the load is regulated during the energy saving mode.

- Increase if the applications shows signs of instability.
- Reduce to increase the speed of response.

Range:	Modbus Decimal Value:	Default:
0% – 100%	linear scale (1 = 0.006104 %) 0% – 100% = (0 – 16384) x% / 0.006104% = Modbus dec. value EX: Modbus value of 5250 = 32.05%	25%

Modbus Address:	Modbus Format:
21184 (52C0 hex)	16-bit unsigned

Touchscreen Menu Path:

Home → Advanced → iERS → iERS Rate

*P6.3 – **iERS Level***

Type: Read/Write

Description:

Determines the maximum energy saving potential.

- Reduce if the application shows signs of instability.
- The amount of energy that can be saved may fall as the "iERS Level" is reduced.

Range:	Modbus Decimal Value:	Default:
0% – 100%	linear scale (1 = 0.006104 %)	100%

Modbus Address:	Modbus Format:
21376 (5380 hex)	16-bit unsigned

Touchscreen Menu Path:

Home → Advanced → iERS → iERS Level

*P6.4 – **Fixed Voltage (Level)***

Type: Read/Write

Description:

User settable voltage level for power calculations.

- If required, can be used to improve accuracy of power calculations.
- This voltage level will be displayed on the "Monitor" screen as Vrms (Approx) if Fixed Voltage is turned on.

Range:	Modbus Decimal Value:	Default:
100V – 500V	linear scale (1 = 1 V)	100V

Modbus Address:	Modbus Format:
35200 (8980 hex)	16-bit unsigned

Touchscreen Menu Path:

Home → Advanced → iERS → Fixed Voltage (Level)

Parameter Details – "Advanced" Menu of Parameters (continued)

*P6.5 – **Fixed Voltage***

Hold. Reg. Type: Read/Write

Description:

Selects the source for the voltage value used in the power calculations.

Range:	*Modbus Decimal Value:*	*Default (decimal):*
• Off : kW, kVAR, and kVA are calculated using the internally measured voltage. This internally measured voltage is not an accurate method of obtaining a voltage reading, and can have an error up to 35% if the starter and motor are unloaded or lightly loaded.	• 0	• Off (0)
• On : kW, kVAR, and kVA are calculated using the "Fixed Voltage." This voltage level will be displayed on the "Monitor" screen as Vrms (Approx).	• 1	

Modbus Address: 35264 (89C0 hex)

Modbus Format: 16-bit unsigned

Touchscreen Menu Path:

Home → Advanced → iERS → Fixed Voltage

Advanced "Control Method" Parameter

*P7.0 – **Control Method***

Hold. Reg. Type: Read/Write

Description:

- Local Touch Screen : Control using the button on the keypad. (Digital Inputs are disabled; Digital Outputs still function as configured.)
- User Programmable : Control using the terminals; function defined in "I/O" menu.
- Two Wire Control : Control using terminals; functions fixed as shown on screen.
- Three Wire Control : Control using terminals; functions fixed as shown on screen.
- Modbus Network : Control via remote Modbus network, remote touchscreen, or Modbus TCP / EtherNet/IP. (Digital Inputs are disabled; Digital Outputs still function as configured.)

Range:	*Modbus Decimal Value:*	*Default (decimal):*
• Local Touch Screen	• 0	• Local (0)
• User Programmable	• 1	
• Two Wire Control	• 2	
• Three Wire Control	• 3	
• Modbus Network	• 4	

Modbus Address: 59392 (E800 hex)

Modbus Format: 16-bit unsigned

Touchscreen Menu Path:

Home → Advanced → Control Method
(also Home → Auto Setup → Control Method) (also Home → I/O → Digital Inputs → Control Method)

Parameter Details – "Advanced" Menu of Parameters (continued)

Advanced "Trip Settings" Parameters

P8.0 – Trip Sensitivity — Type: Read/Write

Description:

Adjusts the reaction time to fault trips.

- Increase "Trip Sensitivity" to slow the response to fault trips.
- Sometimes useful on sites were electrical noise is causing nuisance tripping.
- This is a global setting; increasing "Trip Sensitivity" will slow the response of all the trips. (0% = most sensitive trip setting)

Range: 0% – 100%

Modbus Decimal Value: linear scale (1 = 0.006104%)
0% – 100% = (0 – 16384)
x% / 0.006104% = Modbus dec. value
EX: Modbus value of 5250 = 32.05%

Default: 0%

Modbus Address: 44864 (AF40 hex)

Modbus Format: 16-bit unsigned

Touchscreen Menu Path:
Home → Advanced → Trip Settings → Trip Sensitivity

P8.1 – Cover Open Trip — Hold. Reg. Type: Read/Write

Description:

For safety purposes, the SR55 has the ability to trip if the front cover is open.

Range:	Modbus Decimal Value:	Default (decimal):
• Off : The SR55 will continue to operate with the cover open.	• 0	• Off (0)
• On : The SR55 will trip if the front cover is open. This trip is active at all times.	• 1	

Modbus Address: 53803 (D22B hex)

Modbus Format: 16-bit unsigned

Touchscreen Menu Path:
Home → Advanced → Trip Settings → Cover Open Trip

P8.2 – Shearpin Trip — Hold. Reg. Type: Read/Write

Description:

The shearpin is an electronic equivalent of a mechanical shearpin.

Range:	Modbus Decimal Value:	Default (decimal):
• Off : The SR55 will trip. This trip is constrained by the Shearpin Trip Current and the Shearpin Trip Time.	• 0	
• On : The SR55 will trip. This feature is not active during soft start and soft stop.	• 1	• On (1)

Modbus Address: 53793 (D221 hex)

Modbus Format: 16-bit unsigned

Touchscreen Menu Path:
Home → Advanced → Trip Settings → Shearpin Trip
(also Home → Advanced → Motor Protection → Shearpin Settings → Shearpin Trip)

Parameter Details – "Advanced" Menu of Parameters (continued)

*P8.3 – **Overload Trip***

Hold. Reg. Type: Read/Write

Description:

The overload is an electronic equivalent to a thermal overload.
(See Overload parameter address 33408 for more information about Overload.)

Range:	*Modbus Decimal Value:*	*Default (decimal):*
• Off : The SR55 will continue to operate regardless of motor current level.	• 0	
• On : The SR55 will trip when the "Overload" capacity exceeds the motor current level chosen in Overload Level and Trip Class parameters.	• 1	• On (1)

Modbus Address: 53792 (D220 hex)

Modbus Format: 16-bit unsigned

Touchscreen Menu Path:

Home → Advanced → Trip Settings → Overload Trip
(also Home → Advanced → Motor Protection → Overload Settings → Overload Trip)

*P8.4 – **Low Current Trip***

Hold. Reg. Type: Read/Write

Description:

This can be used to detect if the motor is running lightly loaded.

Range:	*Modbus Decimal Value:*	*Default (decimal):*
• Off : The SR55 will continue to operate regardless of motor current.	• 0	• Off (0)
• On : The SR55 will trip. This feature is not active during soft start and soft stop.	• 1	

Modbus Address: 53787 (D21B hex)

Modbus Format: 16-bit unsigned

Touchscreen Menu Path:

Home → Advanced → Trip Settings → Low Current Trip
(also Home → Advanced → Motor Protection → Low Current Settings → Low Current Trip)

*P8.5 – **Start Current Limit Trip***

Hold. Reg. Type: Read/Write

Description:

Selects between trip or continue if the start current limit has been active for too long.

Range:	*Modbus Decimal Value:*	*Default (decimal):*
• Off : The start will continue regardless of the motor current level.	• 0	
• On : The SR55 will trip. This trip is constrained by the Start Current Limit Level and the Start Current Limit Time.	• 1	• On (1)

Modbus Address: 53790 (D21E hex)

Modbus Format: 16-bit unsigned

Touchscreen Menu Path:

Home → Advanced → Trip Settings → Start Current Limit Trip
(Home → Advanced → Start Settings → Start Current Limit → Start Current Limit Trip)

Parameter Details – "Advanced" Menu of Parameters (continued)

*P8.6 – **Stop Current Limit Trip***

Hold. Reg. Type: Read/Write

Description:

Selects between trip or continue if the stop current limit has been active for too long.

Range:	*Modbus Decimal Value:*	*Default (decimal):*
• Off : The stop will continue regardless of the motor current level.	• 0	• Off (0)
• On : The SR55 will trip. This trip is constrained by the Stop Current Limit Level and the Stop Current Limit Time.	• 1	

Modbus Address: 53791 (D21F hex)

Modbus Format: 16-bit unsigned

Touchscreen Menu Path:

Home → Advanced → Trip Settings → Stop Current Limit Trip
(also Home → Advanced → Stop Settings → Stop Current Limit → Stop Current Limit Trip)

*P8.7 – **PTC Motor Thermistor Trip***

Hold. Reg. Type: Read/Write

Description:

A single PTC motor thermistor or set of PTC motor thermistors can be connected to the PTC terminals.

Range:	*Modbus Decimal Value:*	*Default (decimal):*
• Off : The SR55 will continue to operate.	• 0	• Off (0)
• On : The SR55 will trip if the motor thermistor exceeds its response temperature, or the PTC input is open circuit (> 4kΩ).	• 1	

Modbus Address: 53794 (D222 hex)

Modbus Format: 16-bit unsigned

Touchscreen Menu Path:

Home → Advanced → Trip Settings → PTC Motor Thermistor Trip
(also Home → I/O → PTC Motor Thermistor Trip)

*P8.8 – **L1-L2-L3 Trip***

Hold. Reg. Type: Read/Write

Description:

Determines if supply phase sequence is incorrect for motor rotation.

Range:	*Modbus Decimal Value:*	*Default (decimal):*
• Off : The SR55 will continue to operate normally.	• 0	• Off (0)
• On : Trips if the phase sequence is L1, L2, L3.	• 1	

Modbus Address: 53808 (D230 hex)

Modbus Format: 16-bit unsigned

Touchscreen Menu Path:

Home → Advanced → Trip Settings → L1-L2-L3 Trip

*P8.9 – **L1-L3-L2 Trip***

Hold. Reg. Type: Read/Write

Description:

Determines if supply phase sequence is incorrect for motor rotation.

Range:	*Modbus Decimal Value:*	*Default (decimal):*
• Off : The SR55 will continue to operate normally.	• 0	• Off (0)
• On : Trips if the phase sequence is L1, L3, L2.	• 1	

Modbus Address: 53807 (D22F hex)

Modbus Format: 16-bit unsigned

Touchscreen Menu Path:

Home → Advanced → Trip Settings → L1-L3-L2 Trip

Parameter Details – "Advanced" Menu of Parameters (continued)

*P8.10 – **Remote Start Trip*** — *Hold. Reg. Type:* Read/Write

Description:
For safety reasons the SR55 will trip during some operations if the "Start/Stop" signal is active.

Range:	*Modbus Decimal Value:*	*Default (decimal):*
• Off : The SR55 will not trip and may start unexpectedly if the start signal is accidently left active.	• 0	
• On : Trips if the "Start/Stop" signal is active when the SR55 is first powered up or a reset is applied.	• 1	• On (1)

Modbus Address: 53804 (D22C hex)
Modbus Format: 16-bit unsigned
Touchscreen Menu Path: Home → Advanced → Trip Settings → Remote Start Trip

*P8.11 – **Current Sensor Trip*** — *Hold. Reg. Type:* Read/Write

Description:
Detects if the internal current sensors have failed or reading a very low level.

Range:	*Modbus Decimal Value:*	*Default (decimal):*
• Off : Will continue to operate even if the sensor has failed. Measurements and overload protection may be effected.	• 0	• Off (0)
• On : The SR55 will trip if the internal current sensors fail, or the current measured falls to a very low level.	• 1	

Modbus Address: 53775 (D20F hex)
Modbus Format: 16-bit unsigned
Touchscreen Menu Path: Home → Advanced → Trip Settings → Current Sensor Trip

*P8.12 – **Fan Trip*** — *Hold. Reg. Type:* Read/Write

Description:
Detects if the on-board cooling fans have failed.

Range:	*Modbus Decimal Value:*	*Default (decimal):*
• Off : Will continue to operate and is likely to trip on a thermal trip as the heatsink will not be sufficiently cooled.	• 0	
• On : The SR55 trips if the cooling fans fitted to the SR55 fail.	• 1	• On (1)

Modbus Address: 53782 (D216 hex)
Modbus Format: 16-bit unsigned
Touchscreen Menu Path: Home → Advanced → Trip Settings → Fan Trip

*P8.13 – **Communications Trip*** — *Hold. Reg. Type:* Read/Write

Description:
Detects if the communications bus has failed or become inactive. To keep the bus active there must be at least one Modbus read or write (any address) during the "Timeout ms" period (Modbus 15808).

Range:	*Modbus Decimal Value:*	*Default (decimal):*
• Off : Communication trip disabled.	• 0	
• On : Communication trip enabled.	• 1	• On (1)

Modbus Address: 53796 (D224 hex)
Modbus Format: 16-bit unsigned
Touchscreen Menu Path: Home → Advanced → Trip Settings → Communications Trip

Parameter Details – "Advanced" Menu of Parameters (continued)

*P8.14 – **Shut Down (1) ****

Hold. Reg. Type: Read/Write

Description:

This features controls the soft stop to improve stability.

- Shut Down Trip 1 is an overlap trip. If firing patterns get overlapped at the beginning of stop ramp this trip will occur.

Range:	Modbus Decimal Value:	Default (decimal):
• Off : The motor will stop in the set time.	• 0	
• On : The stop time is truncated if the motor experiences severe torque fluctuations during the soft stop.	• 1	• On (1)

Modbus Address: 53769 (D209 hex)

Modbus Format: 16-bit unsigned

Touchscreen Menu Path:

Home → Advanced → Trip Settings → Shut Down (1)

*P8.15 – **Shut Down (2) ****

Hold. Reg. Type: Read/Write

Description:

This features controls the soft stop to improve stability.

- Shut Down Trip 2 is an oscillation trip. If oscillations in the power factor are too great during a soft stop, then this trip will occur.

Range:	Modbus Decimal Value:	Default (decimal):
• Off : The motor will stop in the set time.	• 0	
• On : The stop time is truncated if the motor experiences severe torque fluctuations during the soft stop.	• 1	• On (1)

Modbus Address: 53770 (D20A hex)

Modbus Format: 16-bit unsigned

Touchscreen Menu Path:

Home → Advanced → Trip Settings → Shut Down (2)

** The Shut Down Trips are in operation during the soft stop ramp.*
At the end of the soft stop ramp, occasionally the motor can become unstable due to torque fluctuations.
If the torque fluctuations get too bad then the SR55 may trip, this could cause issues with the restart. With Shut Down Trips turned on, if the torque fluctuations are experienced the SR55 will automatically stop the soft stop ramp and let the motor coast to a full stop. This stops the SR55 tripping and allows for a restart without resetting a trip. This is normally only for a very small time due to torque fluctuations occurring at the end of a soft stop ramp. If a Shut Down occurs, then it is logged in the log file but will not affect the operation of the SR55. Both shut down trips have to do with rapid changes in power factor. Soft stop smoothing will keep shut down trips from happening.

P8.16 – Thyristor Firing Trip

Hold. Reg. Type: Read/Write

Description:

Detects if there is a fault with one or more of the internal thyristors or bypass relays.

Range:	Modbus Decimal Value:	Default (decimal):
• Off : The SR55 will attempt to start and run although the operation may be erratic. Operating in this mode for prolonged periods may result in SCR failure.	• 0	
• On : Trips if one or more of the thyristors / bypass relays has failed short circuit (typically 0.1Ω or less). Check by measuring the resistance between L1-T1, L2-T2, L3-T3. Never check resistance when power is applied. Using a multi-meter, measured resistance for a good thyristor may exceed 500kΩ. A shorted thyristor will measure 0.1Ω or lower; with the measured value being the resistance of the meter test leads.	• 1	• On (1)

Modbus Address: 53774 (D20E hex)

Modbus Format: 16-bit unsigned

Touchscreen Menu Path:

Home → Advanced → Trip Settings → Thyristor Firing Trip

Warning: Never check resistance when power is applied.

Parameter Details – "Advanced" Menu of Parameters (continued)

P8.17 – Motor Side Phase Loss

Hold. Reg. Type: Read/Write

Description:

Detects if there is a disconnection between the SR55 output and the motor.

Range:	Modbus Decimal Value:	Default (decimal):
• Off : The SR55 will attempt to start and run although the operation may be erratic. Operating in this mode for prolonged periods may result in SCR failure.	• 0	
• On : Trips if there is a disconnection between the output side of the SR55 and the motor.	• 1	• On (1)

Modbus Address: 53777 (D211 hex)

Modbus Format: 16-bit unsigned

Touchscreen Menu Path:

Home → Advanced → Trip Settings → Motor Side Phase Loss

P8.18 – Sensing Fault Trip

Hold. Reg. Type: Read/Write

Description:

Detects if there is a fault with operation of one or more of the internal thyristors.

Range:	Modbus Decimal Value:	Default (decimal):
• Off : The SR55 will attempt to start and run although the operation may be erratic. Operating in this mode for prolonged periods may result in SCR failure.	• 0	
• On : Trips if one or more of the Thyristors fails to turn on properly.	• 1	• On (1)

Modbus Address: 53781 (D215 hex)

Modbus Format: 16-bit unsigned

Touchscreen Menu Path:

Home → Advanced → Trip Settings → Sensing Fault Trip

P8.19 – Thermal Sensor Trip

Hold. Reg. Type: Read/Write

Description:

Detects if the internal temperature sensors have failed.

Range:	Modbus Decimal Value:	Default (decimal):
• Off : The SR55 will continue to operate even if the temperature sensor has failed. Operating in this mode for prolonged periods may result in SCR failure.	• 0	
• On : The SR55 will trip if the internal temperature sensors fail.	• 1	• On (1)

Modbus Address: 53768 (D208 hex)

Modbus Format: 16-bit unsigned

Touchscreen Menu Path:

Home → Advanced → Trip Settings → Thermal Sensor Trip

P8.20 – External Trip Enable

Hold. Reg. Type: Read/Write

Description:

Turning this parameter on will allow an External Trip Command to trip the SR55. A trip can be forced using one of the digital inputs or using a Modbus command. The "Control Method" parameter must be set to "User Programmable" when using a digital input or "Modbus Network" when using Modbus in order to configure the SR55 for an external trip.

Range:	Modbus Decimal Value:	Default (decimal):
• Off : External Trip is disabled.	• 0	
• On : Trips when the programmed input is active.	• 1	• On (1)

Modbus Address: 53795 (D223 hex)

Modbus Format: 16-bit unsigned

Touchscreen Menu Path:

Home → Advanced → Trip Settings → External Trip

Parameter Details – "Advanced" Menu of Parameters (continued)

*P8.21 – **Main Board Trip***

Hold. Reg. Type: Read/Write

Description:
Detects if an unexpected event has occurred during the Main Board operation.

Range:	*Modbus Decimal Value:*	*Default (decimal):*
• Off : Main Board trip disabled.	• 0	
• On : Main Board trip enabled.	• 1	• On (1)

Modbus Address: 53800 (D228 hex)

Modbus Format: 16-bit unsigned

Touchscreen Menu Path:
Home → Advanced → Trip Settings → Main Board Trip

*P8.22 – **Keypad Trip***

Hold. Reg. Type: Read/Write

Description:
Detects if an unexpected event has occurred during the Touchscreen operation.

Range:	*Modbus Decimal Value:*	*Default (decimal):*
• Off : Keypad Trip disabled.	• 0	• OFF (0)
• On : Keypad Trip enabled.	• 1	

Modbus Address: 53798 (D226 hex)

Modbus Format: 16-bit unsigned

Touchscreen Menu Path:
Home → Advanced → Trip Settings → Keypad Trip

*P8.23– **Logging Trip***

Hold. Reg. Type: Read/Write

Description:
Detects if the logging to the internal SD card has failed to operate normally.

Range:	*Modbus Decimal Value:*	*Default (decimal):*
• Off : Logging trip disabled.	• 0	• OFF (0)
• On : Logging trip enabled.	• 1	

Modbus Address: 53799 (D227 hex)

Modbus Format: 16-bit unsigned

Touchscreen Menu Path:
Home → Advanced → Trip Settings → Logging Trip

*P8.24 – **Input Side Phase Loss***

Hold. Reg. Type: Read/Write

Description:
Detects if there is a disconnection between the SR55 input and supply when motor is running.

Range:	*Modbus Decimal Value:*	*Default (decimal):*
• Off : The SR55 will attempt to run, although the operation may be erratic. Operating in this mode for prolonged periods may result in SCR failure.	• 0	
• On : Trips if there is a disconnection between the input side of the SR55 and the supply when the motor is running.	• 1	• On (1)

Modbus Address: 53762 (D202 hex)

Modbus Format: 16-bit unsigned

Touchscreen Menu Path:
Home → Advanced → Trip Settings → Input Side Phase Loss

Advanced "Firing Mode" Parameter

*P9.0 – **Firing Mode*** — Hold. Reg. Type: Read/Write

Description:

Set to correspond with SR55 connection to the Motor. Refer to connection diagrams in the Quick Start Guide, or in the "Electrical Installation" Chapter 2 of this user manual.

Range:	Modbus Decimal Value:	Default (decimal):
• In-Line : The SR55 is connected in-line with a delta or star connected motor.	• 0	• In-Line (0)
• In-Delta : The SR55 is connected inside the delta of the motor. The iERS function is disabled. In-Delta must be selected if "Legacy Delta Mode" parameter is desired.	• 1	

Modbus Address: 128 (80 hex)

Modbus Format: 16-bit unsigned

Touchscreen Menu Path:

Home → Advanced → Firing Mode

Advanced "Legacy Delta Mode" Parameter

*P9.1 – **Legacy Delta Mode*** — Hold. Reg. Type: Read/Write

Description:

Allows the SR55 to be retro-fitted into "Delta" applications that previously used an SR44 in-delta configuration. (Changes phase rotation L1-L2-L3 to L1-L3-L2.)

For "Legacy Delta Mode" to be activated, "Firing Mode" must be set to "In-Delta".

Range:	Modbus Decimal Value:	Default (decimal):
• Off : Operates normally. Refer to SR55 delta connection diagram in "Electrical Installation" Chapter 2 or the Quick Start Guide.	• 0	• Off (0)
• On : Operates in SR44 delta compatibility mode. (Changes phase rotation L1-L2-L3 to L1-L3-L2.)	• 1	

Modbus Address: 192 (C0 hex)

Modbus Format: 16-bit unsigned

Touchscreen Menu Path:

Home → Advanced → Legacy Delta Mode

P9.2 – Main Contactor Control — Hold. Reg. Type: Read/Write

Description:

Used when the motor is required to start when the Main Contactor closes, and stop when it opens. An auxiliary contact from the main contactor is used as a Start/Stop signal. The 'Stop Time' must be set to zero.

Range:	Modbus Decimal Value:	Default (decimal):
• Off : When the contactor opens and the stop signal is given at the same time, the unit may trip on "Phase Loss" (Default).	• 0	• OFF (0)
• On : When the contactor opens and the stop signal is given at the same, time the unit will not trip on "Phase Loss."	• 1	

Modbus Address: 14144 (3740 hex)

Modbus Format: 16-bit unsigned

Touchscreen Menu Path:

Home → Advanced → Main Contactor Control

Parameter Details – "Advanced" Menu of Parameters (continued)

P9.3 – Hand-Auto Control — Hold. Reg. Type: Read/Write

Description:

A Hand-Auto selection switch can be connected to Digital Input D1-2I to change the 'Control Method.' This can be used to change the Start/Stop to 'Hand' if the Communications fails.
Before turning on Hand-Auto Control, the user must ensure that the parameters for Input D1-2I are set for No Function Selected (P10.3 = 0) and High Input Sets Value (P10.4 = 1), which are the default settings for this input.

- D1-2I = 1 : Sets Control Method to "2 -Wire" (Hand).
- D1-2I = 0 : Sets Control Method to "Modbus Network" (Auto).
- Hand : Input D1-1I = High Start / Low Stop; Input D2-1I = High Reset
- Auto : ADDRESS 17920 = Start / Stop; ADDRESS 18368 = Reset

Range:	Modbus Decimal Value:	Default (decimal):
• Off : Control Method can be selected to any method needed per P7.0. Digital Input Functions can be changed.	• 0	• OFF (0)
• On : Control Method is fixed to "User Programable." Digital inputs are fixed to as shown in the description above.	• 1	

Modbus Address: 28160 (6E00 hex)

Modbus Format: 16-bit unsigned

Touchscreen Menu Path:

Home → Advanced → Hand-Auto Control

Parameter Details (continued)

"I/O" Menu of Parameters

I/O "Digital Inputs" Parameters

P10.0 – Digital Input Voltage — Hold. Reg. Type: Read/Write

Description:

The digital inputs D1-1I, D1-2I, D2-1I are designed to work with a range of control supplies.

- It is important to ensure the "Digital Input Voltage" corresponds to the voltage applied to the input. ***Failure to do so may result in damage.***

Range:	Modbus Decimal Value:	Default (decimal):
• 230VAC : 'Active high level' Input voltage must be in the range 195.5V–253V.	• 0	• 230VAC (0)
• 110VAC : 'Active high level' Input voltage must be in the range 93.5V–121V.	• 1	
• 24VDC : 'Active high level ' input voltage must be in the range 20.4V–26.4V.	• 2	

Modbus Address: 10880 (2A80 hex)

Modbus Format: 16-bit unsigned

Touchscreen Menu Path:

Home → I/O → Digital Inputs → Digital Input Voltage
(also Home → Auto Setup → Digital Input Voltage)

P7.0 – Control Method — Hold. Reg. Type: Read/Write

Description:

- Local Touch Screen : Control using the button on the keypad. (Digital Inputs are disabled. Digital Outputs still function as configured.)
- User Programmable : Control using the terminals; function defined in "I/O" menu.
- Two Wire Control : Control using terminals; functions fixed as shown on screen.
- Three Wire Control : Control using terminals; functions fixed as shown on screen.
- Modbus Network : Control via remote Modbus network, remote touchscreen, or Modbus TCP / EtherNet/IP. (Digital Inputs are disabled. Digital Outputs still function as configured.)

Range:	Modbus Decimal Value:	Default (decimal):
• Local Touch Screen	• 0	• Local (0)
• User Programmable	• 1	
• Two Wire Control	• 2	
• Three Wire Control	• 3	
• Modbus Network	• 4	

Modbus Address: 59392 (E800 hex)

Modbus Format: 16-bit unsigned

Touchscreen Menu Path:

Home → I/O → Digital Inputs → Control Method
(also Home → Auto Setup → Control Method) (also Home → Advanced → Control Method)

P10.1 – Digital Input 1 (D1-1I): Select Function — Hold. Reg. Type: Read/Write

Description:

Allows the Digital Input to be mapped to different functions.

- The selected function will change in proportion with the input.
- Digital Inputs can only be user configured if "Control Method" is set to "User Programmable."
- All Digital Inputs are disabled if "Control Method" is set to "Local Touch Screen" or "Modbus Network."

Range: Refer to "Digital Input Function Settings" on page 3–56.

Modbus Decimal Value: Default (decimal): Start/Stop (280)

Modbus Address: 10944 (2AC0 hex)

Modbus Format: 16-bit unsigned

Touchscreen Menu Path:

Home → I/O → Digital Inputs → Digital Input 1 (D1-1I) → Select Function

Parameter Details – "I/O" Menu of Parameters (continued)

*P10.2 – **Digital Input 1 (D1-1I): High Input = 1 Sets Value***

Hold. Reg. Type: Read/Write

Description:

Allows the polarity of the input to be reversed.

Range:	*Modbus Decimal Value:*	*Default (decimal):*
• Off : When the input is off, the selected function will be on.	• 0	
• On : When the input is on, the selected function will be on.	• 1	• On (1)

Modbus Address: 11264 (2C00 hex)

Modbus Format: 16-bit unsigned

Touchscreen Menu Path:

Home → I/O → Digital Inputs → Digital Input 1 (D1-1I) → High Input = 1 Sets Value

*P10.3 – **Digital Input 2 (D1-2I): Select Function***

Hold. Reg. Type: Read/Write

Description:

Allows the Digital Input to be mapped to different functions.

- The selected function will change in proportion with the input.
- Digital Inputs can only be user configured if "Control Method" is set to "User Programmable."
- All Digital Inputs are disabled if "Control Method" is set to "Local Touch Screen" or "Modbus Network."

Range: Refer to "Digital Input Function Settings" on page 3–56.

Modbus Decimal Value:

Default (decimal): Off (0)

Modbus Address: 10945 (2AC1 hex)

Modbus Format: 16-bit unsigned

Touchscreen Menu Path:

Home → I/O → Digital Inputs → Digital Input 2 (D1-2I) → Select Function

*P10.4 – **Digital Input 2 (D1-2I): High Input = 1 Sets Value***

Hold. Reg. Type: Read/Write

Description:

Allows the polarity of the input to be reversed.

Range:	*Modbus Decimal Value:*	*Default (decimal):*
• Off : When the input is off, the selected function will be on.	• 0	
• On : When the input is on, the selected function will be on.	• 1	• On (1)

Modbus Address: 11266 (2C02 hex)

Modbus Format: 16-bit unsigned

Touchscreen Menu Path:

Home → I/O → Digital Inputs → Digital Input 2 (D1-2I) → High Input = 1 Sets Value

*P10.5 – **Digital Input 3 (D2-1I): Select Function***

Hold. Reg. Type: Read/Write

Description:

Allows the Digital Input to be mapped to different functions.

- The selected function will change in proportion with the input.
- Digital Inputs can only be user configured if "Control Method" is set to "User Programmable."
- All Digital Inputs are disabled if "Control Method" is set to "Local Touch Screen" or "Modbus Network."

Range: Refer to "Digital Input Function Settings" on page 3–56.

Modbus Decimal Value:

Default (decimal): Reset (287)

Modbus Address: 10946 (2AC2 hex)

Modbus Format: 16-bit unsigned

Touchscreen Menu Path:

Home → I/O → Digital Inputs → Digital Input 3 (D2-1I) → Select Function

Parameter Details – "I/O" Menu of Parameters (continued)

P10.6 – **Digital Input 3 (D2-1I): High Input = 1 Sets Value**

Hold. Reg. Type: Read/Write

Description:

Allows the polarity of the input to be reversed.

Range:	Modbus Decimal Value:	Default (decimal):
• Off : When the input is off, the selected function will be on.	• 0	
• On : When the input is on, the selected function will be on.	• 1	• On (1)

Modbus Address: 11268 (2C04 hex)

Modbus Format: 16-bit unsigned

Touchscreen Menu Path:

Home → I/O → Digital Inputs → Digital Input 3 (D2-1I) → High Input = 1 Sets Value

Digital Input Function Settings

The following settings are for the "Digital Input x (x): Select Function" I/O parameters.

Settings for the "Digital Input x (x): Select Function" I/O parameters 10944–10946

Settings:	Modbus Decimal Value:	Description:
Off	0	No function selected
Start/Stop	280	• Off : Stops or Soft Stops the SR55. • On : Starts the SR55.
Freeze Ramp	285	If set to On this parameter will hold the Start Ramp even if "Current Irms" is less than the "Current Limit Level." • Off : The Soft Start Ramp is not held and the SR55 will start in the time set. • On : The Soft Start Ramp is held and the SR55 will take longer than the time set to start .
Reset	287	To reset pulse high and then low. • Off : The final state required for a reset. • On : The initial state required for a reset.
iERS on/off	330	Enables and disables the intelligent Energy Recovery System feature (iERS). • Off : The feature is disabled and the motor operates at full voltage. • On : The voltage to the motor will be regulated to ensure optimum efficiency.
External Trip Command	295	Ensure start signal is low before reset. • Off : The SR55 will not trip. • On : If "External Trip" is enabled the SR55 trips.

Parameter Details – "I/O" Menu of Parameters (continued)

I/O "Digital Outputs" Parameters

P11.0 – Digital Output 1 N/C(12): Select Function

Hold. Reg. Type: Read/Write

Description:

Allows the Digital Output to be mapped to different functions.

- The output will change in proportion with the selected function.
- Digital Outputs can only be user configured if the "Control Method" is set to "User Programmable."

Range: Refer to "Digital Output Function Settings" on page 3–59.

Modbus Decimal Value:

Default (decimal): Error (583)

Modbus Address: 11584 (2D40 hex)

Modbus Format: 16-bit unsigned

Touchscreen Menu Path:

Home → I/O → Digital Outputs → Digital Output 1 N/C(12)) → Select Function

P11.1 – Digital Output 1 N/C(12): High Output = 1 When Value

Hold. Reg. Type: Read/Write

Description:

Allows the polarity of the output to be reversed.

Range:

- Off : When the selected function is activated, the output is closed.
- On : When the selected function is activated, the output is open.

Modbus Decimal Value:

- 0
- 1

Default (decimal):

- On (1)

Modbus Address: 11904 (2E80 hex)

Modbus Format: 16-bit unsigned

Touchscreen Menu Path:

Home → I/O → Digital Outputs → Digital Output 1 N/C(12) → High Output = 1 When Value

P11.2 – Digital Output 2 N/O(24): Select Function

Hold. Reg. Type: Read/Write

Description:

Allows the Digital Output to be mapped to different functions.

- The output will change in proportion with the selected function.
- Digital Outputs can only be user configured if the "Control Method" is set to "User Programmable."

Range: Refer to "Digital Output Function Settings" on page 3–59.

Modbus Decimal Value:

Default (decimal): Error (583)

Modbus Address: 11585 (2D41 hex)

Modbus Format: 16-bit unsigned

Touchscreen Menu Path:

Home → I/O → Digital Outputs → Digital Output 2 N/O(24) → Select Function

P11.3 – Digital Output 2 N/O(24): High Output = 1 When Value

Hold. Reg. Type: Read/Write

Description:

Allows the polarity of the output to be reversed.

Range:

- Off : When the selected function is activated, the output is open.
- On : When the selected function is activated, the output is closed.

Modbus Decimal Value:

- 0
- 1

Default (decimal):

- On (1)

Modbus Address: 11906 (2E82 hex)

Modbus Format: 16-bit unsigned

Touchscreen Menu Path:

Home → I/O → Digital Outputs → Digital Output 2 N/O(24) → High Output = 1 When Value

Parameter Details – "I/O" Menu of Parameters (continued)

P11.4 – **Digital Output 3 N/O(34): Select Function**

Hold. Reg. Type: Read/Write

Description:

Allows the Digital output to be mapped to different functions.

- The output will change in proportion with the selected function.
- Digital Outputs can only be user configured if the "Control Method" is set to "User Programmable."

Range: Refer to "Digital Output Function Settings" on page 3–59.

Modbus Decimal Value:

Default (decimal): Running (588)

Modbus Address: 11586 (2D42 hex)

Modbus Format: 16-bit unsigned

Touchscreen Menu Path:

Home → I/O → Digital Outputs → Digital Output 3 N/O(34) → High Output = 1 When Value

P11.5 – **Digital Output 3 N/O(34): High Output = 1 When Value**

Hold. Reg. Type: Read/Write

Description:

Allows the polarity of the output to be reversed.

Range:	Modbus Decimal Value:	Default (decimal):
• Off : When the selected function is activated, the output is open.	• 0	
• On : When the selected function is activated, the output is closed.	• 1	• On (1)

Modbus Address: 11908 (2E84 hex)

Modbus Format: 16-bit unsigned

Touchscreen Menu Path:

Home → I/O → Digital Outputs → Digital Output 3 N/O(34) → High Output = 1 When Value

P11.6 – **Digital Output 4 N/O(44): Select Function**

Hold. Reg. Type: Read/Write

Description:

Allows the Digital output to be mapped to different functions.

- The output will change in proportion with the selected function.
- Digital Outputs can only be user configured if the "Control Method" is set to "User Programmable."

Range: Refer to "Digital Output Function Settings" on page 3–59.

Modbus Decimal Value:

Default (decimal): End of Start (590)

Modbus Address: 11587 (2D43 hex)

Modbus Format: 16-bit unsigned

Touchscreen Menu Path:

Home → I/O → Digital Outputs → Digital Output 4 N/O(44) → Select Function

P11.7 – **Digital Output 4 N/O(44): High Output = 1 When Value**

Hold. Reg. Type: Read/Write

Description:

Allows the polarity of the output to be reversed.

Range:	Modbus Decimal Value:	Default (decimal):
• Off : When the selected function is activated, the output is open.	• 0	
• On : When the selected function is activated, the output is closed.	• 1	• On (1)

Modbus Address: 11910 (2E86 hex)

Modbus Format: 16-bit unsigned

Touchscreen Menu Path:

Home → I/O → Digital Outputs → Digital Output 4 N/O(44) → High Output = 1 When Value

Parameter Details – "I/O" Menu of Parameters (continued)

Digital Output Function Settings

The following settings are for the "Digital Output x (x): Select Function" I/O parameters.

Settings for the "Digital Output x (x): Select Function" I/O parameters 11584–11587			
	Settings:	*Modbus Decimal Value:*	*Description:*
	Off	0	No function selected
	Ready	581	STATUS INDICATION : Ready Off : The SR55 has not powered up successfully or failed to reset from a trip. On : Indicates that the SR55 is healthy and ready for a start. Remains on when Running.
	Enabled	582	STATUS INDICATION : Enabled • Off : The SR55 has not powered up successfully or failed to reset from a trip • On : Indicates that the SR55 is enabled and ready for a start. Remains on when Running.
	Error	583	STATUS INDICATION : Error • Off : The SR55 is fault free. • On : Indicates that SR55 has detected a fault and has shut down. The fault must be cleared before a reset.
	Running	588	STATUS INDICATION : Running • Off : The SR55 has detected a fault and tripped. • On : Indicates that the motor is running and is being actively controlled by the SR55.
	End Of Start	590	STATUS INDICATION : End Of Start • Off : The SR55 is disabled or ramping down. • On : Indicates that the Soft Start ramp has been completed.
	Current Limit	591	STATUS INDICATION : Current Limit • Off : The ramp is not being held because "Current I_{rms}" is less than "Current Limit Level." • On : The ramp is being held because "Current I_{rms}" is greater or equal to "Current Limit Level."
	iERS Active	595	STATUS INDICATION : iERS Active • Off : The iERS saving mode has been disabled either internally or via "iERS." • On : Indicates that the SR55 is operating in the iERS energy saving Mode.
	Auto Reset Pending	736	Indicates that the Reset Delay counter is counting down. • Yes: The Auto Reset Delay is counting down. • No: The Auto Reset Delay is not counting down. • To map to digital output, refer to PNU11584-PNU11587.
	Auto Reset Exceeded	568	Indicates that the maximum number of reset attempts has been reached. • Yes: The number of reset attempts has exceeded the value set. • No: The number of reset attempts has not exceeded the value set. • To map to digital output, refer to PNU11584-PNU11587.
	Shearpin	813	STATUS INDICATION: Shearpin • Off: This trip will not reset automatically • On: This trip will reset automatically when the Reset Delay reaches zero
	Low Current	810	STATUS INDICATION: Low Current • Off: This trip will not reset automatically • On: This trip will reset automatically when the Reset Delay reaches zero

Parameter Details – "I/O" Menu of Parameters (continued)

I/O "Analog Input" Parameters

*P12.0 – **Analog Input Type***

Hold. Reg. Type: Read/Write

Description:

Defines the function of the Analog Input (AI).

Range:

- 0–10V : The input voltage varies from 0 to 10V.
- 4–20mA : The input varies from 4 to 20mA.

Modbus Decimal Value:

- 0
- 1

Default (decimal):

- 0–10V (0)

Modbus Address:

Modbus Format:

Touchscreen Menu Path:

*P12.1 – **Analog Input: Select Function***

Hold. Reg. Type: Read/Write

Description:

Allows the Analog Input to be mapped to different functions. The selected function will change in proportion with the input.

Range:

- Off
- Current Limit Start
- Current Shearpin
- Current Overload

Modbus Decimal Value:

- 0
- 420
- 431
- 441

Default (decimal):

- Off (0)

Modbus Address:

9664 (25C0 hex)

Modbus Format:

16-bit unsigned

Touchscreen Menu Path:

Home → I/O → Analog Inputs → Select Function (Analog Input)

Examples of P12.1 Analog Input Fuction Selections

AI Function Settings:	*Modbus Dec. Value:*	*Example:*
Current Limit Start	420	AI signal controls P3.3 Start Current Limit Level. Ex: Water pumping system with high head; nearly vertical lift. AI signal keeps P3.3 low at start to slowly rotate motor to control flow until height is reached, then AI signal increases P3.3 to allow motor to accelerate to full speed. Usually PLC control.
Current Shearpin	431	AI signal controls P5.6 Shearpin Trip Current. Ex: Applications such as opening and closing sluice gates or doors, which require different running current limits for opening vs. closing. AI signal changes P5.6 as needed, usually via PLC control. P5.5 Shearpin Trip is turned OFF when P5.6 level is reached; however an output should be used to stop the motor via a relay in the motor stop circuit.
Current Overload	441	AI signal controls P5.9 Overload Level. Ex: Motor testing. AI signal changes P5.8 as needed to test different motors.

Parameter Details – "I/O" Menu of Parameters (continued)

*P12.2 – **Analog Input: Scaling Level***

Type: Read/Write

Description:

Allows the selected function to be scaled. The selected function will change in proportion with the input.

- The function will be at its "Scaling Level" when the input is at its maximum.

Range: 0 – 16384

Modbus Decimal Value: linear scale (1 = 0.006104 %)
0% – 100% = (0 – 16384)
x% / 0.006104% = Modbus dec. value
EX: Modbus value of 5250 = 32.05%

Default: 16384

Modbus Address: 9728 (2600 hex)

Modbus Format: 16-bit unsigned

Touchscreen Menu Path:
Home → I/O → Analog Inputs → Scaling Level

I/O "Analog Output" Parameters

*P13.0 – **Analog Output Type***

Hold. Reg. Type: Read/Write

Description:

Defines the function of the Analog Output (AO).

Range:
- 0–10V : The output voltage varies from 0 to 10V.
- 4–20mA : The output varies from 4 to 20mA.

Modbus Decimal Value:
- 0
- 1

Default (decimal):
- 0–10V (0)

Modbus Address: 8960 (2300 hex)

Modbus Format: 16-bit unsigned

Touchscreen Menu Path:
Home → I/O → Analog Outputs → Analog Output Type

*P13.1 – **Analog Output: Select Function***

Hold. Reg. Type: Read/Write

Description:

Allows the Analog Output to be mapped to different functions. The output will change in proportion with the selected function.

- By default the output will be at a maximum when the selected function equals its max value.

Range:	*Modbus Decimal Value:*	*Default (decimal):*
• Off	• 0	• Off (0)
• Current Measured	• 514	
• Overload	• 522	
• Overload SCR	• 161	
• P-Total	• 542	

Modbus Address: 9024 (2340 hex)

Modbus Format: 16-bit unsigned

Touchscreen Menu Path:
Home → I/O → Analog Outputs → Select Function (Analog Output)

Examples of P13.1 Analog Output Fuction Selections

AO Function Settings:	*Modbus Dec. Value:*	*Example:*
Current Measured	514	AO shows P15.5 Current I_{rms}. Ex: This value can be fed out to a panel ammeter for panel designs, or can be used as feedback to a PLC system for monitoring or management system such as SCADA, etc.
Overload	522	AO shows P15.20 Overload. Ex: This value can be fed back to a PLC system for monitoring or management system such as SCADA, etc.
P-Total	542	AO shows P15.8 True Power P. Ex: This value can be fed out to a panel power meter for panel designs, or can be used as feedback to a PLC system for monitoring or management system such as SCADA, etc.

Parameter Details – "I/O" Menu of Parameters (continued)

*P13.2 – **Analog Output: Scaling Level***

Type: Read/Write

Description:

Allows the selected function to be scaled. The output will change in proportion with the selected function.

- The output will be at a maximum when the selected function equals the "Scaling Level."

Range: 0 – 16384

Modbus Decimal Value: linear scale (1 = 0.006104 %)
0% – 100% = (0 – 16384)
x% / 0.006104% = Modbus dec. value
EX: Modbus value of 5250 = 32.05%

Default: 0

Modbus Address: 9088 (2380 hex)

Modbus Format: 16-bit unsigned

Touchscreen Menu Path:
Home → I/O → Analog Outputs → Scaling Level

I/O "PTC Motor Thermistor Trip" Parameter

*P14.0 – **PTC Motor Thermistor Trip***

Hold. Reg. Type: Read/Write

Description:

A single PTC motor thermistor or set of PTC motor thermistors can be connected to the PTC terminals.

Range:	*Modbus Decimal Value:*	*Default (decimal):*
• Off : The SR55 will continue to operate.	• 0	• Off (0)
• On : The SR55 will trip if the motor thermistor exceeds its response temperature, or the PTC input is open circuit (> 4kΩ).	• 1	

Modbus Address: 53794 (D222 hex)

Modbus Format: 16-bit unsigned

Touchscreen Menu Path:
Home → I/O → PTC Motor Thermistor Trip
(also Home → Advanced → Trip Settings → PTC Motor Thermistor Trip)

Parameter Details (continued)

"Monitor" Menu of Parameters

P15.0 – Line Frequency

Type: Read Only

Description:
The frequency of the 3-phase supply.

Range: 45Hz – 65Hz

Modbus Decimal Value: linear scale (1 = 0.001 Hz)
Freq(Hz) = (Value / 1000)

Default: n/a

Modbus Address: 32000 (7D00 hex)

Modbus Format: 16-bit unsigned

Touchscreen Menu Path:
Home → Monitor → Line Frequency

P15.1 – Phase Rotation

Hold. Reg. Type: Read Only

Description:
Indicates the phase sequence of the incoming supply.

Range:
- RYB = L1, L2, L3
- RBY = L1, L3, L2

Modbus Decimal Value:
- 0
- 1

Default (decimal):
- L1-L2-L3 (0)

Modbus Address: 32064 (7D40 hex)

Modbus Format: 16-bit unsigned

Touchscreen Menu Path:
Home → Monitor → Phase Rotation

P15.2 – I1

Type: Read Only

Description:
The RMS current on phase L1.

Range: 0A – 10,000A

Modbus Decimal Value: linear scale (1 = 1mA)
Current (A) = (Value / 1000)

Default: 0A

Modbus Address: 33536/33537 (8300/8301 hex)

Modbus Format: 32-bit unsigned

Touchscreen Menu Path:
Home → Monitor → I1

P15.3 – I2

Type: Read Only

Description:
The RMS current on phase L2.

Range: 0A – 10,000A

Modbus Decimal Value: linear scale (1 = 1mA)
Current (A) = (Value / 1000)

Default: 0A

Modbus Address: 33538/33539 (8302/8303 hex)

Modbus Format: 32-bit unsigned

Touchscreen Menu Path:
Home → Monitor → I2

Parameter Details – "Monitor" Menu of Parameters (continued)

*P15.4 – **I3***

Type: Read Only

Description:
The RMS current on phase L3.

Range: 0A – 10,000A

Modbus Decimal Value: linear scale (1 = 1mA)
Current (A) = (Value / 1000)

Default: 0A

Modbus Address: 33540/33541 (8304/8305 hex)

Modbus Format: 32-bit unsigned

Touchscreen Menu Path:
Home → Monitor → I3

*P15.5 – **Current Irms***

Type: Read Only

Description:
The RMS motor current.
- This is the maximum of the 3 phases.
- This value is used for the overload and power calculations.

Range: 0A – 10,000A

Modbus Decimal Value: linear scale (1 = 1mA)
Current (A) = (Value / 1000)

Default: 0A

Modbus Address: 32896/32897 (8080/8081 hex)

Modbus Format: 32-bit unsigned

Touchscreen Menu Path:
Home → Monitor → Current Irms

*P15.6 – **Vrms (Approx)***

Type: Read Only

Description:
The RMS 3-phase supply voltage.
- This is the average of the 3 phases.
- This value is used for power calculations.
- This value is derived internally. If a higher level of accuracy is required, a "Fixed Voltage" value can be used.
- The internally measured voltage is not an accurate method of obtaining a voltage reading. This voltage reading can have and error up to 35% if the starter and motor is unloaded or lightly loaded.

Range: 0V – 500V

Modbus Decimal Value: linear scale (1 = 1 V)

Default: 0V

Modbus Address: 32960 (80C0 hex)

Modbus Format: 16-bit unsigned

Touchscreen Menu Path:
Home → Monitor → Vrms (Approx)

*P15.7 – **Real Power Factor***

Type: Read Only

Description:
The actual power factor.

Range: 0 – 1

Modbus Decimal Value: linear scale (1 = 0.001)

Default: 0

Modbus Address: 33024 (8100 hex)

Modbus Format: 16-bit unsigned

Touchscreen Menu Path:
Home → Monitor → Real Power Factor

Parameter Details – "Monitor" Menu of Parameters (continued)

*P15.8 – **True Power P***

Type: Read Only

Description:
Total True Power. This is a sum of the 3 phases.

Range:
0kW – 10,000 kW

Modbus Decimal Value:
linear scale (1 = 1W)
True Power (kW) = (Value / 1000)

Default:
0kW

Modbus Address:
34688/34689 (8780/8781 hex)

Modbus Format:
32-bit unsigned

Touchscreen Menu Path:
Home → Monitor → True Power P

*P15.9 – **Apparent Power S***

Type: Read Only

Description:
Total Apparent Power. This is a sum of the 3 phases.

Range:
0kVA – 10,000 kVA

Modbus Decimal Value:
linear scale (1 = 1VA)
Apparent Power
(kVA) = (Value/1000)

Default:
0 kVA

Modbus Address:
34816/34817 (8800/8801 hex)

Modbus Format:
32-bit unsigned

Touchscreen Menu Path:
Home → Monitor → Apparent Power S

*P15.10 – **Reactive Power Q***

Type: Read Only

Description:

Range:
0 kVAR – 10,000 kVAR

Modbus Decimal Value:
linear scale (1 = 1VAR)
Reactive Power
(kVAR) = (Value / 1000)

Default:
0 kVAR

Modbus Address:
34944/34945 (8880/8881 hex)

Modbus Format:
32-bit unsigned

Touchscreen Menu Path:
Home → Monitor → Reactive Power Q

*P15.11 – **iERS Saving Level***

Type: Read Only

Description:
Indicates the level of potential saving. 100% indicates that SR55 is saving at its maximum level.

Range:
0% – 100%

Modbus Decimal Value:
linear scale (1 = 0.006104 %)
0% – 100% = (0 – 16384)
x% / 0.006104% = Modbus dec. value
EX: Modbus value of 5250 = 32.05%

Default:
0%

Modbus Address:
35008 (88C0 hex)

Modbus Format:
16-bit unsigned

Touchscreen Menu Path:
Home → Monitor → iERS Saving Level

Parameter Details – "Monitor" Menu of Parameters (continued)

P15.12 – Delay Angle

Type: Read Only

Description:
Internal firing delay angle. Displayed for diagnostic purposes.

Range: 0° – 55°

Modbus Decimal Value: linear scale (1 = 1° of mains cycle) Time(ms)=(Value/LineFreq)*(25/9)

Default: 0°

Modbus Address: 22400 (5780 hex)

Modbus Format: 16-bit unsigned

Touchscreen Menu Path:
Home → Monitor → Delay Angle

P15.13 – BackStop

Type: Read Only

Description:
The maximum possible Delay Angle for the current iERS saving phase.
(Backstop starts at 55°, and can be reduced by iERS.)
- Displayed for diagnostic purposes.
- May decrease during heavy load periods or instability.
- The BackStop is the maximum iERS saving level allowed.

Range: 0° – 55°

Modbus Decimal Value: linear scale (1 = 1° of mains cycle) Time(ms)=(Value/LineFreq)*(25/9)

Default: 0°

Modbus Address: 23040 (5A00 hex)

Modbus Format: 16-bit unsigned

Touchscreen Menu Path:
Home → Monitor → BackStop

P15.14 – Delay Max

Type: Read Only

Description:
The maximum possible delay for iERS saving. Displayed for diagnostic purposes.
(Delay Max is internally fixed at 55°.)

Range: 0° – 55°

Modbus Decimal Value: linear scale (1 = 1° of mains cycle) Time(ms)=(Value/LineFreq)*(25/9)

Default: 0°

Modbus Address: 22464 (57C0 hex)

Modbus Format: 16-bit unsigned

Touchscreen Menu Path:
Home → Monitor → Delay Max

P15.15 – Pres PF Degrees

Type: Read Only

Description:
The Present Power Factor used by the iERS saving function. This is the actual Power Factor for the iERS saving function. The "Delay" is constantly adjusted to minimize the control loop error between "Pres PF Degrees" and "Ref PF Degrees." The parameter displays the displacement part of the True Power Factor, and is used for diagnostic purposes.

Range: 0° – 90°

Modbus Decimal Value: linear scale (1 = 1° of mains cycle) Time(ms)=(Value/LineFreq)*(25/9)

Default: 0°

Modbus Address: 21824 (5540 hex)

Modbus Format: 16-bit unsigned

Touchscreen Menu Path:
Home → Monitor → Pres PF Degrees

Parameter Details – "Monitor" Menu of Parameters (continued)

*P15.16 – **Ref PF Degrees*** — *Type:* Read Only

Description:
The Reference Power Factor used by the iERS saving function. This is the target Power Factor for the iERS saving function. The parameter will change dynamically depending on motor operation. The parameter displays the displacement part of the True Power Factor, and is used for diagnostic purposes.

Range:	*Modbus Decimal Value:*	*Default:*
0° – 90°	linear scale (1 = 1° of mains cycle) Time(ms)=(Value/LineFreq)*(25/9)	0°

Modbus Address:	*Modbus Format:*
21760 (5500 hex)	16-bit unsigned

Touchscreen Menu Path:
Home → Monitor → Ref PF Degrees

*P15.17 – **Start Saving Level*** — *Type:* Read Only

Description:
- The current in Amps at which the iERS is enabled or disabled.
  The iERS function is active when the motor current is less than the "Start Saving Level."
- When the iERS function is disabled, internal bypass relays close to improve efficiency.

Range:	*Modbus Decimal Value:*	*Default:*
50% I-motor – 80% I-motor	linear scale (1 = 0.006104 %) 50% – 80% = (8191 – 13106) x% / 0.006104% = Modbus dec. value EX: Modbus value of 9000 = 54.936%	80% I-motor

Modbus Address:	*Modbus Format:*
21320 (5348 hex)	16-bit unsigned

Touchscreen Menu Path:
Home → Monitor → Start Saving Level

Each SR55 is tested at the factory. The Last Peak (Start) Current default may vary depending on the load that was tested.

*P18.0 – **Last Peak (Start) Current*** — *Type:* Read Only

Description:
Displays the peak current of the last successful start.

Range:	*Modbus Decimal Value:*	*Default:*
0A – 10,000A	linear scale (1 = 1mA)	0A

Modbus Address:	*Modbus Format:*
38400/38401 (9600/9601 hex)	32-bit unsigned

Touchscreen Menu Path:
Home → Monitor → Last Peak Current
(also Home → Log → Start Current Log → Last Peak Current)

PARAMETER DETAILS – "MONITOR" MENU OF PARAMETERS (CONTINUED)

*P15.18 – **HEATSINK TEMP*** — TYPE: Read Only

DESCRIPTION:

The temperature of the internal SR55 heatsink.

- The SR55 will trip when the heatsink temperature exceeds 80°C.
- The internal cooling fans will turn on if this temperature exceeds 40°C.

RANGE:	MODBUS DECIMAL VALUE:	DEFAULT:
-20°C – 80°C	Address Format 16-bit (Highbyte=b11-b8, LowByte=b7-b0) Ta ≥ 0 b12=0 Ta < 0 b12=1 Address Note bit12=0 [HighByte*16 + LowByte/16]bit12=1 256-[HighByte*16 + LowByte/16]	ambient °C

MODBUS ADDRESS: 36544 (8EC0 hex)

MODBUS FORMAT: 16-bit unsigned

TOUCHSCREEN MENU PATH:

Home → Monitor → HeatSink Temp

*P15.19 – **MOTOR THERMISTOR*** — TYPE: Read Only

DESCRIPTION:

Indicates the state of the SR55 PTC input; designed for single, double or triple PTC in series.

- PTC thermistor standards DIN44081 / EN60738-1 apply.
  (< 300Ω @ 25°C, typically 4kΩ @ nominal temperature)
- The value indicated is a not in degrees Celsius, but is an internal representation.
- At 25°C the value displayed should be less than 100, and the SR55 trips when value > 400 (4kΩ). (open circuit = 1023)
- The value will increase rapidly when the motor thermistors approach their nominal temperature.
- If thermistors are connected, the "Thermistor trip" should be turned "on."

RANGE:	MODBUS DECIMAL VALUE:	DEFAULT:
0 – 1024	linear scale (1 = 1)	1024

MODBUS ADDRESS: 10432 (28C0 hex)

MODBUS FORMAT: 16-bit unsigned

TOUCHSCREEN MENU PATH:

Home → Monitor → Motor Thermistor

*P15.20 – **OVERLOAD*** — TYPE: Read Only

DESCRIPTION:

The SR55 has an "Overload" function that is an electronic equivalent to a thermal overload.

- "Overload" displays the overload capacity, which is a measure of how close the SR55 "Overload Trip" is to tripping.
- When "Current I_{rms}" is greater than the "Overload Level," the "Overload" increases in accordance with the "Trip Class."
- When "Current I_{rms}" is less than the "Overload Level," the "Overload" decreases exponentially (if greater than 50%).
- When the "Overload" reaches 100% the SR55 will trip.
- During situations when (I-motor) is equal to (I-SR55) the overload will indicate 50%.

RANGE:	MODBUS DECIMAL VALUE:	DEFAULT:
0% – 100%	linear scale (1 = 0.006104 %) 0% – 100% = (0 – 16384) x% / 0.006104% = Modbus dec. value EX: Modbus value of 5250 = 32.05%	0%

MODBUS ADDRESS: 33408 (8280 hex)

MODBUS FORMAT: 16-bit unsigned

TOUCHSCREEN MENU PATH:

Home → Monitor → Overload

Parameter Details (continued)

"Log" Menu of Parameters

Each SR55 is tested at the factory, and each unit may have a brief log history from this testing.

Event Times for Start Current, Temperatue, Overload Parameters

The event time shows up on the "Start Current," "temperature," and "Overload" Logs. These events are logged at the same time, which are reflected by the 10 "Event Time" parameters.

*P16.0 – **Event Time –***
Last Peak Start Current / Last Temperature / Last Overload

Holding Register Type: Read Only

Description:
Displays the event time.

Range:
hh:mm:ss

Modbus Decimal Value:
Time (ms) since midnight (bytes5,4,3,2) and Days since 01/01/1984 (bytes1,0)

Default:
GMT

Modbus Address:
38464 (9640 hex)

Modbus Format:
6 Bytes

Touchscreen Menu Path:
Home → Log → Start Current / Temperature / Overload →
Last Peak Start Current / Last Temperature / Last Overload

*P16.1 – **Event Time –***
Last Peak Start Current / Last Temperature / Last Overload -1

Holding Register Type: Read Only

Description:
Displays the event time -1.

Range:
hh:mm:ss

Modbus Decimal Value:
Time (ms) since midnight (bytes5,4,3,2) and Days since 01/01/1984 (bytes1,0)

Default:
GMT

Modbus Address:
38467 (9643 hex)

Modbus Format:
6 Bytes

Touchscreen Menu Path:
Home → Log → Start Current / Temperature / Overload →
Last Peak Start Current / Last Temperature / Last Overload -1

*P16.2 – **Event Time –***
Last Peak Start Current / Last Temperature / Last Overload -2

Holding Register Type: Read Only

Description:
Displays the event time -2.

Range:
hh:mm:ss

Modbus Decimal Value:
Time (ms) since midnight (bytes5,4,3,2) and Days since 01/01/1984 (bytes1,0)

Default:
GMT

Modbus Address:
38470 (9646 hex)

Modbus Format:
6 Bytes

Touchscreen Menu Path:
Home → Log → Start Current / Temperature / Overload →
Last Peak Start Current / Last Temperature / Last Overload -2

Parameter Details – "Log" Menu of Parameters (continued)

Each SR55 is tested at the factory, and each unit may have a brief log history from this testing.

*P16.3 – **Event Time – Last Peak Start Current / Last Temperature / Last Overload -3***

Holding Register Type: Read Only

Description:
Displays the event time -3.

Range:
hh:mm:ss

Modbus Decimal Value:
Time (ms) since midnight (bytes5,4,3,2) and Days since 01/01/1984 (bytes1,0)

Default:
GMT

Modbus Address:
38473 (9649 hex)

Modbus Format:
6 Bytes

Touchscreen Menu Path:
Home → Log → Start Current / Temperature / Overload → Last Peak Start Current / Last Temperature / Last Overload -3

*P16.4 – **Event Time – Last Peak Start Current / Last Temperature / Last Overload -4***

Holding Register Type: Read Only

Description:
Displays the event time -4.

Range:
hh:mm:ss

Modbus Decimal Value:
Time (ms) since midnight (bytes5,4,3,2) and Days since 01/01/1984 (bytes1,0)

Default:
GMT

Modbus Address:
38476 (964C hex)

Modbus Format:
6 Bytes

Touchscreen Menu Path:
Home → Log → Start Current / Temperature / Overload → Last Peak Start Current / Last Temperature / Last Overload -4

*P16.5 – **Event Time – Last Peak Start Current / Last Temperature / Last Overload -5***

Holding Register Type: Read Only

Description:
Displays the event time -5.

Range:
hh:mm:ss

Modbus Decimal Value:
Time (ms) since midnight (bytes5,4,3,2) and Days since 01/01/1984 (bytes1,0)

Default:
GMT

Modbus Address:
38479 (964F hex)

Modbus Format:
6 Bytes

Touchscreen Menu Path:
Home → Log → Start Current / Temperature / Overload → Last Peak Start Current / Last Temperature / Last Overload -5

Parameter Details – "Log" Menu of Parameters (continued)

Each SR55 is tested at the factory, and each unit may have a brief log history from this testing.

*P16.6 – **Event Time – Last Peak Start Current / Last Temperature / Last Overload -6***

Holding Register Type: Read Only

Description:
Displays the event time -6.

Range:
hh:mm:ss

Modbus Decimal Value:
Time (ms) since midnight (bytes5,4,3,2) and Days since 01/01/1984 (bytes1,0)

Default:
GMT

Modbus Address:
38482 (9652 hex)

Modbus Format:
6 Bytes

Touchscreen Menu Path:
Home → Log → Start Current / Temperature / Overload → Last Peak Start Current / Last Temperature / Last Overload -6

*P16.7 – **Event Time – Last Peak Start Current / Last Temperature / Last Overload -7***

Holding Register Type: Read Only

Description:
Displays the event time -7.

Range:
hh:mm:ss

Modbus Decimal Value:
Time (ms) since midnight (bytes5,4,3,2) and Days since 01/01/1984 (bytes1,0)

Default:
GMT

Modbus Address:
38485 (9655 hex)

Modbus Format:
6 Bytes

Touchscreen Menu Path:
Home → Log → Start Current / Temperature / Overload → Last Peak Start Current / Last Temperature / Last Overload -7

*P16.8 – **Event Time – Last Peak Start Current / Last Temperature / Last Overload -8***

Holding Register Type: Read Only

Description:
Displays the event time -8.

Range:
hh:mm:ss

Modbus Decimal Value:
Time (ms) since midnight (bytes5,4,3,2) and Days since 01/01/1984 (bytes1,0)

Default:
GMT

Modbus Address:
38488 (9658 hex)

Modbus Format:
6 Bytes

Touchscreen Menu Path:
Home → Log → Start Current / Temperature / Overload → Last Peak Start Current / Last Temperature / Last Overload -8

Parameter Details – "Log" Menu of Parameters (continued)

Each SR55 is tested at the factory, and each unit may have a brief log history from this testing.

*P16.9 – **Event Time – Last Peak Start Current / Last Temperature / Last Overload -9***

Holding Register Type: Read Only

Description:
Displays the event time -9.

Range:
hh:mm:ss

Modbus Decimal Value:
Time (ms) since midnight (bytes5,4,3,2) and Days since 01/01/1984 (bytes1,0)

Default:
GMT

Modbus Address:
38491 (965B hex)

Modbus Format:
6 Bytes

Touchscreen Menu Path:
Home → Log → Start Current / Temperature / Overload → Last Peak Start Current / Last Temperature / Last Overload -9

Log "Trip Log" & Event Times Parameters

*P17.0 – **Last Trip***

Type: Read Only

Description:
Displays the last Fault trip.
- Refer to "Trip Code Descriptions" in this chapter.

Range:
- Trip: 0 – 65,535
- Trip Time: hh:mm:ss

Modbus Decimal Value:
- linear scale (1 = 1)
- Time (ms) since midnight (bytes5,4,3,2) and Days since 01/01/1984 (bytes1,0)

Default:
- 0
- GMT

Modbus Address:
- Trip: 60608 (ECC0 hex)
- Trip Time: 60672 (ED00 hex)

Modbus Format:
- 16-bit unsigned
- 6 Bytes

Touchscreen Menu Path:
Home → Log → Trip Log → Last Trip

*P17.1 – **Last Trip -1***

Type: Read Only

Description:
Displays the last Fault trip -1.
- Refer to "Trip Code Descriptions" in this chapter.

Range:
- Trip: 0 – 65,535
- Trip Time: hh:mm:ss

Modbus Decimal Value:
- linear scale (1 = 1)
- Time (ms) since midnight (bytes5,4,3,2) and Days since 01/01/1984 (bytes1,0)

Default:
- 0
- GMT

Modbus Address:
- 60609 (ECC1 hex)
- 60675 (ED03 hex)

Modbus Format:
- 16-bit unsigned
- 6 Bytes

Touchscreen Menu Path:
Home → Log → Trip Log → Last Trip -1

Parameter Details – "Log" Menu of Parameters (continued)

Each SR55 is tested at the factory, and each unit may have a brief log history from this testing.

*P17.2 – **Last Trip -2***

Type: Read Only

Description:

Displays the last Fault trip -2.

- Refer to "Trip Code Descriptions" in this chapter.

Range:

- Trip: 0 – 65,535
- Trip Time: hh:mm:ss

Modbus Decimal Value:

- linear scale (1 = 1)
- Time (ms) since midnight (bytes5,4,3,2) and Days since 01/01/1984 (bytes1,0)

Default:

- 0
- GMT

Modbus Address:

- 60610 (ECC2 hex)
- 60678 (ED06 hex)

Modbus Format:

- 16-bit unsigned
- 6 Bytes

Touchscreen Menu Path:

Home → Log → Trip Log → Last Trip -2

*P17.3 – **Last Trip -3***

Type: Read Only

Description:

Displays the last Fault trip -3.

- Refer to "Trip Code Descriptions" in this chapter.

Range:

- Trip: 0 – 65,535
- Trip Time: hh:mm:ss

Modbus Decimal Value:

- linear scale (1 = 1)
- Time (ms) since midnight (bytes5,4,3,2) and Days since 01/01/1984 (bytes1,0)

Default:

- 0
- GMT

Modbus Address:

- 60611 (ECC3 hex)
- 60681 (ED09 hex)

Modbus Format:

- 16-bit unsigned
- 6 Bytes

Touchscreen Menu Path:

Home → Log → Trip Log → Last Trip -3

*P17.4 – **Last Trip -4***

Type: Read Only

Description:

Displays the last Fault trip -4.

- Refer to "Trip Code Descriptions" in this chapter.

Range:

- Trip: 0 – 65,535
- Trip Time: hh:mm:ss

Modbus Decimal Value:

- linear scale (1 = 1)
- Time (ms) since midnight (bytes5,4,3,2) and Days since 01/01/1984 (bytes1,0)

Default:

- 0
- GMT

Modbus Address:

- 60612 (ECC4 hex)
- 60684 (ED0C hex)

Modbus Format:

- 16-bit unsigned
- 6 Bytes

Touchscreen Menu Path:

Home → Log → Trip Log → Last Trip -4

Parameter Details – "Log" Menu of Parameters (continued)

Each SR55 is tested at the factory, and each unit may have a brief log history from this testing.

*P17.5 – **Last Trip -5***

Type: Read Only

Description:

Displays the last Fault trip -5.

- Refer to "Trip Code Descriptions" in this chapter.

Range:

- Trip: 0 – 65,535
- Trip Time: hh:mm:ss

Modbus Decimal Value:

- linear scale (1 = 1)
- Time (ms) since midnight (bytes5,4,3,2) and Days since 01/01/1984 (bytes1,0)

Default:

- 0
- GMT

Modbus Address:

- 60613 (ECC5 hex)
- 60687 (ED0F hex)

Modbus Format:

- 16-bit unsigned
- 6 Bytes

Touchscreen Menu Path:

Home → Log → Trip Log → Last Trip -5

*P17.6 – **Last Trip -6***

Type: Read Only

Description:

Displays the last Fault trip -6.

- Refer to "Trip Code Descriptions" in this chapter.

Range:

- Trip: 0 – 65,535
- Trip Time: hh:mm:ss

Modbus Decimal Value:

- linear scale (1 = 1)
- Time (ms) since midnight (bytes5,4,3,2) and Days since 01/01/1984 (bytes1,0)

Default:

- 0
- GMT

Modbus Address:

- 60614 (ECC6 hex)
- 60690 (ED12 hex)

Modbus Format:

- 16-bit unsigned
- 6 Bytes

Touchscreen Menu Path:

Home → Log → Trip Log → Last Trip -6

*P17.7 – **Last Trip -7***

Type: Read Only

Description:

Displays the last Fault trip -7.

- Refer to "Trip Code Descriptions" in this chapter.

Range:

- Trip: 0 – 65,535
- Trip Time: hh:mm:ss

Modbus Decimal Value:

- linear scale (1 = 1)
- Time (ms) since midnight (bytes5,4,3,2) and Days since 01/01/1984 (bytes1,0)

Default:

- 0
- GMT

Modbus Address:

- 60615 (ECC7 hex)
- 60693 (ED15 hex)

Modbus Format:

- 16-bit unsigned
- 6 Bytes

Touchscreen Menu Path:

Home → Log → Trip Log → Last Trip -7

Parameter Details – "Log" Menu of Parameters (continued)

Each SR55 is tested at the factory, and each unit may have a brief log history from this testing.

*P17.8 – **Last Trip -8***

Type: Read Only

Description:

Displays the last Fault trip -8.

- Refer to "Trip Code Descriptions" in this chapter.

Range:

- Trip: 0 – 65,535
- Trip Time: hh:mm:ss

Modbus Decimal Value:

- linear scale (1 = 1)
- Time (ms) since midnight (bytes5,4,3,2) and Days since 01/01/1984 (bytes1,0)

Default:

- 0
- GMT

Modbus Address:

- 60616 (ECC8 hex)
- 60696 (ED18 hex)

Modbus Format:

- 16-bit unsigned
- 6 Bytes

Touchscreen Menu Path:

Home → Log → Trip Log → Last Trip -8

*P17.9 – **Last Trip -9***

Type: Read Only

Description:

Displays the last Fault trip -9.

- Refer to "Trip Code Descriptions" in this chapter.

Range:

- Trip: 0 – 65,535
- Trip Time: hh:mm:ss

Modbus Decimal Value:

- linear scale (1 = 1)
- Time (ms) since midnight (bytes5,4,3,2) and Days since 01/01/1984 (bytes1,0)

Default:

- 0
- GMT

Modbus Address:

- 60617 (ECC9 hex)
- 60699 (ED1B hex)

Modbus Format:

- 16-bit unsigned
- 6 Bytes

Touchscreen Menu Path:

Home → Log → Trip Log → Last Trip -9

Log "Start Current Log" Parameters

*P18.0 – **Last Peak Current***

Type: Read Only

Description:

Displays the peak current of the last successful start.

Range:

0A – 10,000A

Modbus Decimal Value:

linear scale (1 = 1mA)
Current (A) = (Value / 1000)

Default:

0A

Modbus Address:

38400/38401 (9600/9601 hex)

Modbus Format:

32-bit unsigned

Touchscreen Menu Path:

Home → Log → Start Current Log → Last Peak Current
(Home → Monitor → Last Peak Current)

Parameter Details – "Log" Menu of Parameters (continued)

Each SR55 is tested at the factory, and each unit may have a brief log history from this testing.

*P18.1 – **Last Peak Start Current -1***

Type: Read Only

Description:
Displays the peak current of the last successful start -1.

Range: 0A – 10,000A

Modbus Decimal Value: linear scale (1 = 1mA)
Current (A) = (Value / 1000)

Default: 0A

Modbus Address: 38402/38403 (9602/9603 hex)

Modbus Format: 32-bit unsigned

Touchscreen Menu Path:
Home → Log → Start Current Log → Last Peak Start Current -1

*P18.2 – **Last Peak Start Current -2***

Type: Read Only

Description:
Displays the peak current of the last successful start -2.

Range: 0A – 10,000A

Modbus Decimal Value: linear scale (1 = 1mA)
Current (A) = (Value / 1000)

Default: 0A

Modbus Address: 38404/38405 (9604/9605 hex)

Modbus Format: 32-bit unsigned

Touchscreen Menu Path:
Home → Log → Start Current Log → Last Peak Start Current -2

*P18.3 – **Last Peak Start Current -3***

Type: Read Only

Description:
Displays the peak current of the last successful start -3.

Range: 0A – 10,000A

Modbus Decimal Value: linear scale (1 = 1mA)
Current (A) = (Value / 1000)

Default: 0A

Modbus Address: 38406/38407 (9606/9607 hex)

Modbus Format: 32-bit unsigned

Touchscreen Menu Path:
Home → Log → Start Current Log → Last Peak Start Current -3

*P18.4 – **Last Peak Start Current -4***

Type: Read Only

Description:
Displays the peak current of the last successful start -4.

Range: 0A – 10,000A

Modbus Decimal Value: linear scale (1 = 1mA)
Current (A) = (Value / 1000)

Default: 0A

Modbus Address: 38408/38409 (9608/9609 hex)

Modbus Format: 32-bit unsigned

Touchscreen Menu Path:
Home → Log → Start Current Log → Last Peak Start Current -4

Parameter Details – "Log" Menu of Parameters (continued)

Each SR55 is tested at the factory, and each unit may have a brief log history from this testing.

*P18.5 – **Last Peak Start Current -5***

Type: Read Only

Description:
Displays the peak current of the last successful start -5.

Range: 0A – 10,000A

Modbus Decimal Value: linear scale (1 = 1mA)
Current (A) = (Value / 1000)

Default: 0A

Modbus Address: 38410/38411 (960A/960B hex)

Modbus Format: 32-bit unsigned

Touchscreen Menu Path:
Home → Log → Start Current Log → Last Peak Start Current -5

*P18.6 – **Last Peak Start Current -6***

Type: Read Only

Description:
Displays the peak current of the last successful start -6.

Range: 0A – 10,000A

Modbus Decimal Value: linear scale (1 = 1mA)
Current (A) = (Value / 1000)

Default: 0A

Modbus Address: 38412/38413 (960C/960D hex)

Modbus Format: 32-bit unsigned

Touchscreen Menu Path:
Home → Log → Start Current Log → Last Peak Start Current -6

*P18.7 – **Last Peak Start Current -7***

Type: Read Only

Description:
Displays the peak current of the last successful start -7.

Range: 0A – 10,000A

Modbus Decimal Value: linear scale (1 = 1mA)
Current (A) = (Value / 1000)

Default: 0A

Modbus Address: 38414/38415 (960E/960F hex)

Modbus Format: 32-bit unsigned

Touchscreen Menu Path:
Home → Log → Start Current Log → Last Peak Start Current -7

*P18.8 – **Last Peak Start Current -8***

Type: Read Only

Description:
Displays the peak current of the last successful start -8.

Range: 0A – 10,000A

Modbus Decimal Value: linear scale (1 = 1mA)
Current (A) = (Value / 1000)

Default: 0A

Modbus Address: 38416/38417 (9610/9611 hex)

Modbus Format: 32-bit unsigned

Touchscreen Menu Path:
Home → Log → Start Current Log → Last Peak Start Current -8

Parameter Details – "Log" Menu of Parameters (continued)

Each SR55 is tested at the factory, and each unit may have a brief log history from this testing.

*P18.9 – **Last Peak Start Current -9***

Type: Read Only

Description:
Displays the peak current of the last successful start -9.

Range:
0A – 10,000A

Modbus Decimal Value:
linear scale (1 = 1mA)
Current (A) = (Value / 1000)

Default:
0A

Modbus Address:
38418/38419 (9612/9613 hex)

Modbus Format:
32-bit unsigned

Touchscreen Menu Path:
Home → Log → Start Current Log → Last Peak Start Current -9

Log "Stop Current Log" & Event Times Parameters

*P19.0 – **Last Peak Stop Current***

Type: Read Only

Description:
Displays the peak current of the last successful stop.

Range:
- Peak Current: 0A – 10,000A
- Peak Current Time: hh:mm:ss

Modbus Decimal Value:
- linear scale (1 = 1mA) Current (A) = (Value / 1000)
- Time (ms) since midnight (bytes5,4,3,2) and Days since 01/01/1984 (bytes1,0)

Default:
- 0A
- GMT

Modbus Address:
- Peak Current: 39040/39041 (9880/9881 hex)
- Peak Current Time: 39104/39105/39106 (98C0/98C1/98C2 hex)

Modbus Format:
- 32-bit unsigned
- 6 Bytes

Touchscreen Menu Path:
Home → Log → Stop Current Log → Last Peak Stop Current

*P19.1 – **Last Peak Stop Current -1***

Type: Read Only

Description:
Displays the peak current of the last successful stop -1.

Range:
- Peak Current: 0A – 10,000A
- Peak Current Time: hh:mm:ss

Modbus Decimal Value:
- linear scale (1 = 1mA) Current (A) = (Value / 1000)
- Time (ms) since midnight (bytes5,4,3,2) and Days since 01/01/1984 (bytes1,0)

Default:
- 0A
- GMT

Modbus Address:
- Peak Current: 39042/39043 (9882/9883 hex)
- Peak Current Time: 39107/39108/39109 (98C3/98C4/98C5 hex)

Modbus Format:
- 32-bit unsigned
- 6 Bytes

Touchscreen Menu Path:
Home → Log → Stop Current Log → Last Peak Stop Current -1

Parameter Details – "Log" Menu of Parameters (continued)

Each SR55 is tested at the factory, and each unit may have a brief log history from this testing.

*P19.2 – **Last Peak Stop Current -2***

Type: Read Only

Description:

Displays the peak current of the last successful stop -2.

Range:	*Modbus Decimal Value:*	*Default:*
• Peak Current: 0A – 10,000A	• linear scale (1 = 1mA) Current (A) = (Value / 1000)	• 0A
• Peak Current Time: hh:mm:ss	• Time (ms) since midnight (bytes5,4,3,2) and Days since 01/01/1984 (bytes1,0)	• GMT

Modbus Address:
- Peak Current: 39044/39045 (9884/9885 hex)
- Peak Current Time: 39110/39111/39112 (98C6/98C7/98C8 hex)

Modbus Format:
- 32-bit unsigned
- 6 Bytes

Touchscreen Menu Path:

Home → Log → Stop Current Log → Last Peak Stop Current -2

*P19.3 – **Last Peak Stop Current -3***

Type: Read Only

Description:

Displays the peak current of the last successful stop -3.

Range:	*Modbus Decimal Value:*	*Default:*
• Peak Current: 0A – 10,000A	• linear scale (1 = 1mA) Current (A) = (Value / 1000)	• 0A
• Peak Current Time: hh:mm:ss	• Time (ms) since midnight (bytes5,4,3,2) and Days since 01/01/1984 (bytes1,0)	• GMT

Modbus Address:
- Peak Current: 39046/39047 (9886/9887 hex)
- Peak Current Time: 39113/39114/39115 (98C9/98CA/98CB hex)

Modbus Format:
- 32-bit unsigned
- 6 Bytes

Touchscreen Menu Path:

Home → Log → Stop Current Log → Last Peak Stop Current -3

*P19.4 – **Last Peak Stop Current -4***

Type: Read Only

Description:

Displays the peak current of the last successful stop -4.

Range:	*Modbus Decimal Value:*	*Default:*
• Peak Current: 0A – 10,000A	• linear scale (1 = 1mA) Current (A) = (Value / 1000)	• 0A
• Peak Current Time: hh:mm:ss	• Time (ms) since midnight (bytes5,4,3,2) and Days since 01/01/1984 (bytes1,0)	• GMT

Modbus Address:
- Peak Current: 39048/39049 (9888/9889 hex)
- Peak Current Time: 39116/39117/39118 (98CC/98CD/98CE hex)

Modbus Format:
- 32-bit unsigned
- 6 Bytes

Touchscreen Menu Path:

Home → Log → Stop Current Log → Last Peak Stop Current -4

Parameter Details – "Log" Menu of Parameters (continued)

Each SR55 is tested at the factory, and each unit may have a brief log history from this testing.

*P19.5 – **Last Stop Current -5***

Type: Read Only

Description:

Displays the peak current of the last successful stop -5.

Range:	*Modbus Decimal Value:*	*Default:*
• Peak Current: 0A – 10,000A	• linear scale (1 = 1mA) Current (A) = (Value / 1000)	• 0A
• Peak Current Time: hh:mm:ss	• Time (ms) since midnight (bytes5,4,3,2) and Days since 01/01/1984 (bytes1,0)	• GMT

Modbus Address:
- Peak Current: 39050/39051 (988A/988B hex)
- Peak Current Time: 39119/39120/39121 (98CF/98D0/98D1 hex)

Modbus Format:
- 32-bit unsigned
- 6 Bytes

Touchscreen Menu Path:

Home → Log → Stop Current Log → Last Peak Stop Current -5

*P19.6 – **Last Peak Stop Current -6***

Type: Read Only

Description:

Displays the peak current of the last successful stop -6.

Range:	*Modbus Decimal Value:*	*Default:*
• Peak Current: 0A – 10,000A	• linear scale (1 = 1mA) Current (A) = (Value / 1000)	• 0A
• Peak Current Time: hh:mm:ss	• Time (ms) since midnight (bytes5,4,3,2) and Days since 01/01/1984 (bytes1,0)	• GMT

Modbus Address:
- Peak Current: 39052/39053 (988C/988D hex)
- Peak Current Time: 39122/39123/39124 (98D2/98D3/98D4 hex)

Modbus Format:
- 32-bit unsigned
- 6 Bytes

Touchscreen Menu Path:

Home → Log → Stop Current Log → Last Peak Stop Current -6

*P19.7 – **Last Peak Stop Current -7***

Type: Read Only

Description:

Displays the peak current of the last successful stop -7.

Range:	*Modbus Decimal Value:*	*Default:*
• Peak Current: 0A – 10,000A	• linear scale (1 = 1mA) Current (A) = (Value / 1000)	• 0A
• Peak Current Time: hh:mm:ss	• Time (ms) since midnight (bytes5,4,3,2) and Days since 01/01/1984 (bytes1,0)	• GMT

Modbus Address:
- Peak Current: 39054/39055 (988E/988F hex)
- Peak Current Time: 39125/39126/39127 (98D5/98D6/98D7 hex)

Modbus Format:
- 32-bit unsigned
- 6 Bytes

Touchscreen Menu Path:

Home → Log → Stop Current Log → Last Peak Stop Current -7

Parameter Details – "Log" Menu of Parameters (continued)

Each SR55 is tested at the factory, and each unit may have a brief log history from this testing.

*P19.8 – **Last Peak Stop Current -8***

Type: Read Only

Description:
Displays the peak current of the last successful stop -8.

Range:
- Peak Current: 0A – 10,000A
- Peak Current Time: hh:mm:ss

Modbus Decimal Value:
- linear scale (1 = 1mA) Current (A) = (Value / 1000)
- Time (ms) since midnight (bytes5,4,3,2) and Days since 01/01/1984 (bytes1,0)

Default:
- 0A
- GMT

Modbus Address:
- Peak Current: 39056/39057 (9890/9891 hex)
- Peak Current Time: 39128/39129/39130 (98D8/98D9/98DA hex)

Modbus Format:
- 32-bit unsigned
- 6 Bytes

Touchscreen Menu Path:
Home → Log → Stop Current Log → Last Peak Stop Current -8

*P19.9 – **Last Peak Stop Current -9***

Type: Read Only

Description:
Displays the peak current of the last successful stop -9.

Range:
- Peak Current: 0A – 10,000A
- Peak Current Time: hh:mm:ss

Modbus Decimal Value:
- linear scale (1 = 1mA) Current (A) = (Value / 1000)
- Time (ms) since midnight (bytes5,4,3,2) and Days since 01/01/1984 (bytes1,0)

Default:
- 0A
- GMT

Modbus Address:
- Peak Current: 39058/39059 (9892/9893 hex)
- Peak Current Time: 39131/39132/39133 (98DB/98DC/98DD hex)

Modbus Format:
- 32-bit unsigned
- 6 Bytes

Touchscreen Menu Path:
Home → Log → Stop Current Log → Last Peak Stop Current -9

Log "Temperature Log" Parameters

*P20.0 – **Last Temperature***

Type: Read Only

Description:
Displays the heatsink temperature at the end of the last successful start.

Range:
-20°C to 80°C

Modbus Decimal Value:
bit12=0 [HighByte*16 + LowByte/16]bit12=1 256-[HighByte*16 + LowByte/16]

Default:
ambient °C

Modbus Address:
39680 (9B00 hex)

Modbus Format:
16-bit (Highbyte=b11-b8, LowByte=b7-b0) Ta >= 0 b12=0 Ta < 0 b12=1

Touchscreen Menu Path:
Home → Log → Temperature Log → Last Temperature

Parameter Details – "Log" Menu of Parameters (continued)

Each SR55 is tested at the factory, and each unit may have a brief log history from this testing.

*P20.1 – **Last Temperature -1***

Type: Read Only

Description:
Displays the heatsink temperature at the end of the last successful start -1.

Range:
-20°C to 80°C

Modbus Decimal Value:
bit12=0 [HighByte*16 + LowByte/16]bit12=1 256-[HighByte*16 + LowByte/16]

Default:
ambient °C

Modbus Address:
39681 (9B01 hex)

Modbus Format:
16-bit (Highbyte=b11-b8, LowByte=b7-b0) Ta >= 0 b12=0 Ta < 0 b12=1

Touchscreen Menu Path:
Home → Log → Temperature Log → Last Temperature -1

*P20.2 – **Last Temperature -2***

Type: Read Only

Description:
Displays the heatsink temperature at the end of the last successful start -2.

Range:
-20°C to 80°C

Modbus Decimal Value:
bit12=0 [HighByte*16 + LowByte/16]bit12=1 256-[HighByte*16 + LowByte/16]

Default:
ambient °C

Modbus Address:
39682 (9B02 hex)

Modbus Format:
16-bit (Highbyte=b11-b8, LowByte=b7-b0) Ta >= 0 b12=0 Ta < 0 b12=1

Touchscreen Menu Path:
Home → Log → Temperature Log → Last Temperature -2

*P20.3 – **Last Temperature -3***

Type: Read Only

Description:
Displays the heatsink temperature at the end of the last successful start -3.

Range:
-20°C to 80°C

Modbus Decimal Value:
bit12=0 [HighByte*16 + LowByte/16]bit12=1 256-[HighByte*16 + LowByte/16]

Default:
ambient °C

Modbus Address:
39683 (9B03 hex)

Modbus Format:
16-bit (Highbyte=b11-b8, LowByte=b7-b0) Ta >= 0 b12=0 Ta < 0 b12=1

Touchscreen Menu Path:
Home → Log → Temperature Log → Last Temperature -3

Parameter Details – "Log" Menu of Parameters (continued)

Each SR55 is tested at the factory, and each unit may have a brief log history from this testing.

*P20.4 – **Last Temperature -4***

Type: Read Only

Description:
Displays the heatsink temperature at the end of the last successful start -4.

Range:
-20°C to 80°C

Modbus Decimal Value:
bit12=0 [HighByte*16 + LowByte/16]bit12=1 256-[HighByte*16 + LowByte/16]

Default:
ambient °C

Modbus Address:
39684 (9B04 hex)

Modbus Format:
16-bit (Highbyte=b11-b8, LowByte=b7-b0) Ta >= 0 b12=0 Ta < 0 b12=1

Touchscreen Menu Path:
Home → Log → Temperature Log → Last Temperature -4

*P20.5 – **Last Temperature -5***

Type: Read Only

Description:
Displays the heatsink temperature at the end of the last successful start -5.

Range:
-20°C to 80°C

Modbus Decimal Value:
bit12=0 [HighByte*16 + LowByte/16]bit12=1 256-[HighByte*16 + LowByte/16]

Default:
ambient °C

Modbus Address:
39685 (9B05 hex)

Modbus Format:
16-bit (Highbyte=b11-b8, LowByte=b7-b0) Ta >= 0 b12=0 Ta < 0 b12=1

Touchscreen Menu Path:
Home → Log → Temperature Log → Last Temperature -5

*P20.6 – **Last Temperature -6***

Type: Read Only

Description:
Displays the heatsink temperature at the end of the last successful start -6.

Range:
-20°C to 80°C

Modbus Decimal Value:
bit12=0 [HighByte*16 + LowByte/16]bit12=1 256-[HighByte*16 + LowByte/16]

Default:
ambient °C

Modbus Address:
39686 (9B06 hex)

Modbus Format:
16-bit (Highbyte=b11-b8, LowByte=b7-b0) Ta >= 0 b12=0 Ta < 0 b12=1

Touchscreen Menu Path:
Home → Log → Temperature Log → Last Temperature -6

Parameter Details – "Log" Menu of Parameters (continued)

Each SR55 is tested at the factory, and each unit may have a brief log history from this testing.

*P20.7 – **Last Temperature -7***

Type: Read Only

Description:
Displays the heatsink temperature at the end of the last successful start -7.

Range:
-20°C to 80°C

Modbus Decimal Value:
bit12=0 [HighByte*16 + LowByte/16]bit12=1 256-[HighByte*16 + LowByte/16]

Default:
ambient °C

Modbus Address:
39687 (9B07 hex)

Modbus Format:
16-bit (Highbyte=b11-b8, LowByte=b7-b0) Ta >= 0 b12=0 Ta < 0 b12=1

Touchscreen Menu Path:
Home → Log → Temperature Log → Last Temperature -7

*P20.8 – **Last Temperature -8***

Type: Read Only

Description:
Displays the heatsink temperature at the end of the last successful start -8.

Range:
-20°C to 80°C

Modbus Decimal Value:
bit12=0 [HighByte*16 + LowByte/16]bit12=1 256-[HighByte*16 + LowByte/16]

Default:
ambient °C

Modbus Address:
39688 (9B08 hex)

Modbus Format:
16-bit (Highbyte=b11-b8, LowByte=b7-b0) Ta >= 0 b12=0 Ta < 0 b12=1

Touchscreen Menu Path:
Home → Log → Temperature Log → Last Temperature -8

*P20.9 – **Last Temperature -9***

Type: Read Only

Description:
Displays the heatsink temperature at the end of the last successful start -9.

Range:
-20°C to 80°C

Modbus Decimal Value:
bit12=0 [HighByte*16 + LowByte/16]bit12=1 256-[HighByte*16 + LowByte/16]

Default:
ambient °C

Modbus Address:
39689 (9B09 hex)

Modbus Format:
16-bit (Highbyte=b11-b8, LowByte=b7-b0) Ta >= 0 b12=0 Ta < 0 b12=1

Touchscreen Menu Path:
Home → Log → Temperature Log → Last Temperature -9

Parameter Details – "Log" Menu of Parameters (continued)

Each SR55 is tested at the factory, and each unit may have a brief log history from this testing.

Log "Overload Log" Parameters

*P21.0 – **Last Overload***

Type: Read Only

Description:
Displays the overload level at the end of the last successful start.

Range: 0% to 100%

Modbus Decimal Value: linear scale (1 = 0.006104 %)

Default: 0%

Modbus Address: 40320 (9D80 hex)

Modbus Format: 16-bit unsigned

Touchscreen Menu Path:
Home → Log → Overload Log → Last Overload

*P21.1 – **Last Overload -1***

Type: Read Only

Description:
Displays the overload level at the end of the last successful start -1.

Range: 0% to 100%

Modbus Decimal Value: linear scale (1 = 0.006104 %)

Default: 0%

Modbus Address: 40321 (9D81 hex)

Modbus Format: 16-bit unsigned

Touchscreen Menu Path:
Home → Log → Overload Log → Last Overload -1

*P21.2 – **Last Overload -2***

Type: Read Only

Description:
Displays the overload level at the end of the last successful start -2.

Range: 0% to 100%

Modbus Decimal Value: linear scale (1 = 0.006104 %)

Default: 0%

Modbus Address: 40322 (9D82 hex)

Modbus Format: 16-bit unsigned

Touchscreen Menu Path:
Home → Log → Overload Log → Last Overload -2

*P21.3 – **Last Overload -3***

Type: Read Only

Description:
Displays the overload level at the end of the last successful start -3.

Range: 0% to 100%

Modbus Decimal Value: linear scale (1 = 0.006104 %)

Default: 0%

Modbus Address: 40323 (9D83 hex)

Modbus Format: 16-bit unsigned

Touchscreen Menu Path:
Home → Log → Overload Log → Last Overload -3

*P21.4 – **Last Overload -4***

Type: Read Only

Description:
Displays the overload level at the end of the last successful start -4.

Range: 0% to 100%

Modbus Decimal Value: linear scale (1 = 0.006104 %)

Default: 0%

Modbus Address: 40324 (9D84 hex)

Modbus Format: 16-bit unsigned

Touchscreen Menu Path:
Home → Log → Overload Log → Last Overload -4

Parameter Details – "Log" Menu of Parameters (continued)

Each SR55 is tested at the factory, and each unit may have a brief log history from this testing.

*P21.5 – **Last Overload -5***

Type: Read Only

Description:
Displays the overload level at the end of the last successful start -5.

Range: 0% to 100%

Modbus Decimal Value: linear scale (1 = 0.006104 %)

Default: 0%

Modbus Address: 40325 (9D85 hex)

Modbus Format: 16-bit unsigned

Touchscreen Menu Path:
Home → Log → Overload Log → Last Overload -5

*P21.6 – **Last Overload -6***

Type: Read Only

Description:
Displays the overload level at the end of the last successful start -6.

Range: 0% to 100%

Modbus Decimal Value: linear scale (1 = 0.006104 %)

Default: 0%

Modbus Address: 40326 (9D86 hex)

Modbus Format: 16-bit unsigned

Touchscreen Menu Path:
Home → Log → Overload Log → Last Overload -6

*P21.7 – **Last Overload -7***

Type: Read Only

Description:
Displays the overload level at the end of the last successful start -7.

Range: 0% to 100%

Modbus Decimal Value: linear scale (1 = 0.006104 %)

Default: 0%

Modbus Address: 40327 (9D87 hex)

Modbus Format: 16-bit unsigned

Touchscreen Menu Path:
Home → Log → Overload Log → Last Overload -7

*P21.8 – **Last Overload -8***

Type: Read Only

Description:
Displays the overload level at the end of the last successful start -8.

Range: 0% to 100%

Modbus Decimal Value: linear scale (1 = 0.006104 %)

Default: 0%

Modbus Address: 40328 (9D88 hex)

Modbus Format: 16-bit unsigned

Touchscreen Menu Path:
Home → Log → Overload Log → Last Overload -8

*P21.9 – **Last Overload -9***

Type: Read Only

Description:
Displays the overload level at the end of the last successful start -9.

Range: 0% to 100%

Modbus Decimal Value: linear scale (1 = 0.006104 %)

Default: 0%

Modbus Address: 40329 (9D89 hex)

Modbus Format: 16-bit unsigned

Touchscreen Menu Path:
Home → Log → Overload Log → Last Overload -9

Parameter Details – "Log" Menu of Parameters (continued)

Each SR55 is tested at the factory, and each unit may have a brief log history from this testing.

Log "Totals Log" Parameter

*P22.0 – **Number of Starts*** — *Type:* Read Only

Description:
The total number of successful starts.

Range:	*Modbus Decimal Value:*	*Default:*
0 to 4,294,836,225	linear scale (1 = 1)	0
Modbus Address:	*Modbus Format:*	
35840/3841 (8C00/8C01 hex)	32-bit unsigned	

Touchscreen Menu Path:
Home → Log → Totals Log → Number of Starts

Log "Download Log File" Parameter

*P23.0 – **Download Log File*** — *Type:* Read/Write

Description:
Download the full log file onto the USB flash drive.

- The SR55 logs several parameters during normal and fault conditions.
- Data is stored in CSV format.
- Log file cannot be downloaded using the remote touchscreen. Please use the on-board touchscreen only.

Range:	*Modbus Decimal Value:*	*Default:*
n/a	n/a	n/a
Modbus Address:	*Modbus Format:*	
n/a	n/a	

Touchscreen Menu Path:
Home → Log → Download Log File

Log "Clear Trip Log" Parameter

*P24.0 – **Clear Trip Log*** — *Type:* Read/Write

Description:
Deletes all of the history in the Trip Log.

Range:	*Modbus Decimal Value:*	*Default:*
Yes / No	n/a	n/a
Modbus Address:	*Modbus Format:*	
n/a	n/a	

Touchscreen Menu Path:
Home → Log → Clear Trip Log

Parameter Details (continued)

"Device" Menu of Parameters

*P25.0 – **Update Firmware*** — *Type:* Read/Write

Description:
Used to upgrade to the latest version of firmware using a USB flash drive.

Range: n/a
Modbus Decimal Value: n/a
Default: n/a
Modbus Address: n/a
Modbus Format: n/a
Touchscreen Menu Path:
Home → Device → Update Firmware

*P25.1 – **Date*** — *Type:* Read/Write

Description:
Enter current date.
- Date format can be set to either dd/mm/yyyy or mm/dd/yyyy; refer to "Date format" parameter.

Range:
- dd/mm/yyyy
- mm/dd/yyyy

Modbus Decimal Value: n/a
Default: n/a
Modbus Address:
See "Time" parameter for date address.
Modbus Format: n/a
Touchscreen Menu Path:
Home → Device → Date

*P25.2 – **Time*** — *Type:* Read/Write

Description:
Allows the time to be changed to 'local' time.

Range:
hh:mm:ss
Modbus Decimal Value:
Time(ms) since midnight (bytes5,4,3,2) and Days since 01/01/1984 (bytes1,0)
Default: GMT
Modbus Address:
14720 (3980 hex)
Modbus Format:
6 Bytes
Touchscreen Menu Path:
Home → Device → Time

Time derivation example

Time is derived from the number of milliseconds since midnight.

Date can be derived from the number of days since midnight 1st Jan 1984.

If Modbus addresses 14720 thru 14724 (6 bytes) and the time is 09:50 and the date is 9th March 2015, then the SR55 will return: 021C49782C7E.

Where: 021C4978 = # milliseconds since midnight, and 2C7E = # days since 01/01/84.

Since there are 60 seconds in a minute, 3600 seconds in an hour, and 86400 seconds in a day, the time can be derived as follows:

- *021C4978h = 35407992d (ms) = 35407 (s)*
- *Hour = 35407 mod 86400/3600 = 09*
- *Min = 35407 mod 3600/60 = 50*
- *Sec = 35407 mod 60 = 07*

So the time is 09:50:07.
For the date the SR55 will only return the number of days since 01/01/84.
So: 2C7Eh = 11390d.

Parameter Details – "Device" Menu of Parameters (continued)

P25.3 – Language

Hold. Reg. Type: Read/Write

Description:

Selects the display language for the touchscreen.
Enter the required language from the displayed list.

Range:	Modbus Decimal Value:	Default (decimal):
• ENG	• 1	• English (1)
• DEU	• 2	
• FRA	• 3	
• ITA	• 4	
• CHN	• 5	
• TUR	• 6	
• POR	• 7	
• JPN	• 8	
• SRB	• 9	
• RUS	• 10	
• VIE	• 11	
• KOR	• 12	

Modbus Address: 13376 (3440 hex)

Modbus Format: 16-bit unsigned

Touchscreen Menu Path: Home → Device → Language

P25.4 – Passcode

Type: Read/Write

Description:

Stops unauthorized access to read/write parameters.

- The "Screen lock" must be turned on for the passcode be active.
- With passcode protection on, the SR55 can still be started and stopped. The Log and Monitor screens can also still be accessed.

Range:	Modbus Decimal Value:	Default:
0 – 9 per Byte (ASCII character)	48–57 (48 = "0" ... 57 = "9")	n/a

Modbus Address:	Modbus Format:
• 12864 (3240 hex) – Byte 3 (MSB)	• 16-bit unsigned
• 12865 (3241 hex) – Byte 2	• 16-bit unsigned
• 12866 (3242 hex) – Byte 1	• 16-bit unsigned
• 12867 (3243 hex) – Byte 0	• 16-bit unsigned

Touchscreen Menu Path: Home → Device → Passcode

Warning: If a passcode is set in the SR55 and lost/forgotten, you must contact Technical Support for assistance (800) 633-0405. The procedure will require the unit be factory reset by an authorized representative.

P25.5 – Backlight Timeout

Type: Read/Write

Description:

Time for backlight on display.

- After the period set, the back light on the screen will turn off.
- To reactivate, touch screen anywhere.
- To disable, set to 0.

Range:	Modbus Decimal Value:	Default:
0s – 3600s	linear scale (1 = 1 s)	60s

Modbus Address: 14208 (3780 hex)

Modbus Format: 16-bit unsigned

Touchscreen Menu Path: Home → Device → Backlight Timeout

Parameter Details – "Device" Menu of Parameters (continued)

Device "Networks" Parameters

P26.0 – Address — Type: Read/Write

Description:
Sets the Modbus station number.

Range: 1 – 32
Modbus Decimal Value: linear scale (1 = 1)
Default: 1
Modbus Address: 16000 (3E80 hex)
Modbus Format: 16-bit unsigned
Touchscreen Menu Path:
Home → Device → Networks → Modbus Network Settings → Address

P26.1 – Baud Rate — Hold. Reg. Type: Read/Write

Description:
Sets the serial communications baud rate.

Range:	Modbus Decimal Value:	Default (decimal):
• 9600	• 0	
• 19200	• 1	• 19200 (1)
• 38400	• 2	
• 57600	• 3	
• 115200	• 4	

Modbus Address: 16064 (3EC0 hex)
Modbus Format: 16-bit unsigned
Touchscreen Menu Path:
Home → Device → Networks → Modbus Network Settings → Baud Rate

P26.2 – Parity — Hold. Reg. Type: Read/Write

Description:
Sets the serial communications parity bit. Also sets the stop bits.
- No parity uses 2 stop bits.
- Odd/even parity uses 1 stop bit.

Range:	Modbus Decimal Value:	Default (decimal):
• None	• 0	
• Even	• 1	• Even (1)
• Odd	• 2	

Modbus Address: 16128 (3F00 hex)
Modbus Format: 16-bit unsigned
Touchscreen Menu Path:
Home → Device → Networks → Modbus Network Settings → Parity

P26.3 – Traffic LEDs — Hold. Reg. Type: Read/Write

Description:
Allows the user to check the state of the modbus communication network.
- Red LED = Receive.
- Green LED = Transmit.

Range:	Modbus Decimal Value:	Default (decimal):
• Off : The Red and Green LEDs display the SR55 status information. Turning traffic LEDs on will not allow normal operating LED states to indicate. Ex: Flashing red LED for a fault present.	• 0	• Off (0)
• On : The Red and Green LEDS display the traffic on the Modbus communications network.	• 1	

Modbus Address: 14080 (3700 hex)
Modbus Format: 16-bit unsigned
Touchscreen Menu Path:
Home → Device → Networks → Modbus Network Settings → Traffic LEDs

Parameter Details – "Device" Menu of Parameters (continued)

*P26.4 – **Anybus / ModbusTCP / EtherNetIP***

Type: Read Only

Description:

Modbus TCP Communication Module.
Active only with Anybus / ModbusTCP / EtherNetIP Communication Module installed.

Range:	Modbus Decimal Value:	Default:
• Address • Serial Number • Firmware Version • Connection	–	–

Modbus Address: –

Modbus Format: –

Touchscreen Menu Path:

Home → Device → Networks → Anybus / Modbus TCP / EtherNet/IP

*P26.5 – **Timeout mS***

Type: Read/Write

Description:

Communications trip Timeout period. To prevent a 'Communications Trip' (If enabled), a parameter must be written to or read within this time period.

Range:	Modbus Decimal Value:	Default:
0ms – 60,000ms	linear scale (1 = 1 ms)	5000ms

Modbus Address: 15808 (3DC0 hex)

Modbus Format: 16-bit unsigned

Touchscreen Menu Path:

Home → Device → Networks → Timeout mS

P26.6 – Communications Shutdown

Hold. Reg. Type: Read/Write

Description:

This works in conjunction with the 'Communications Trip.'

Range:	Modbus Decimal Value:	Default (decimal):
• Off : If the 'Communication Trip' is turned 'On' the unit will trip if the communications fail.	• 0	
• On : If the 'Communication Trip' is turned 'On' the unit will shut down instead of tripping if the communications fail.	• 1	• ON (1)

Modbus Address: 53802 (D22A hex)

Modbus Format: 16-bit unsigned

Touchscreen Menu Path:

Home → Device → Networks → Communications Shutdown

Parameter Details – "Device" Menu of Parameters (continued)

Device Parameters

P27.0 – Reset Defaults

Hold. Reg. Type: Read/Write

Description:

Restores the SR55 to the factory defaults.

- Reset to factory defaults does not reset configurations that were set up in the Anybus modules, because the configuration is stored in the communication module; not the starter.

Range:	Modbus Decimal Value:	Default (decimal):
• No	• 0	• No (0)
• Yes	• 1	

Modbus Address: 62080 (F280 hex)

Modbus Format: 16-bit unsigned

Touchscreen Menu Path: Home → Device → Reset Defaults

WARNING: If a passcode is set in the SR55 and lost/forgotten, you must contact Technical Support for assistance (800) 633-0405. The procedure will require the unit be factory reset by an authorized representative. RESET DEFAULTS parameter will not be available if screen lock is enabled.

P27.1 – About

Type: Read Only

Description:

Gives the SR55 model number, serial number, and current firmware versions.

Range:	Modbus Decimal Value:	Default:
• Model number	–	–
• Serial Number		
• Firmware versions		

Modbus Address: –

Modbus Format: –

Touchscreen Menu Path: Home → Device → About

P27.2 – Screen Lock

Hold. Reg. Type: Read/Write

Description:

Stops unauthorized access to read/write parameters.

Range:	Modbus Decimal Value:	Default (decimal):
• Off	• 0	• Off (0)
• On	• 1	

Modbus Address: 12992 (32C0 hex)

Modbus Format: 16-bit unsigned

Touchscreen Menu Path: Home → Device → Screen Lock

WARNING: Ensure the passcode is known before setting this parameter. If a passcode is set in the SR55 and lost/forgotten, you must contact Technical Support for assistance (800) 633-0405. The procedure will require the unit be factory reset by an authorized representative.

P27.3 – Date Format

Hold. Reg. Type: Read/Write

Description:

Allows the date format to be changed to American.

Range:	Modbus Decimal Value:	Default:
• dd/mm/yyyy	• 0	• dd/mm/yyyy
• mm/dd/yyyy	• 1	

Modbus Address: 13248 (33C0 hex)

Modbus Format: 16-bit unsigned

Touchscreen Menu Path: Home → Device → Date Format

Parameter Details – "Device" Menu of Parameters (continued)

*P27.4 – **Temperature Format***

Type: Read/Write

Description:
Selects °C or °F for displayed temperatures.

Range:
- °C
- °F

Modbus Decimal Value:
- 0
- 1

Default:
- °C

Modbus Address:
13312 (3400 hex)

Modbus Format:
16-bit unsigned

Touchscreen Menu Path:
Home → Device → Temperature Format

*P27.5 – **Parameters to USB***

Hold. Reg. Type: Read/Write

Description:
Allows the user to save parameters.
- Downloads the parameters from the SR55 to the USB drive.
- Data is stored in CSV format.
- Parameters cannot be saved to a USB using the remote touchscreen. Please use the on-board touchscreen only.

Range:
- No
- Yes

Modbus Decimal Value:
- 0
- 1

Default (decimal):
- No (0)

Modbus Address:
62272 (F340)

Modbus Format:
–

Touchscreen Menu Path:
Home → Device → Parameters to USB

*P27.6 – **Parameters from USB***

Hold. Reg. Type: Read/Write

Description:
Allows the user to load parameters stored on a USB flash drive.
- Uploads the parameters from the USB drive to the SR55.
- Data is stored in CSV format.
- Parameters cannot be uploaded from a USB using the remote touchscreen. Please use the on-board touchscreen only.

Range:
- No
- Yes

Modbus Decimal Value:
- 0
- 1

Default (decimal):
- No (0)

Modbus Address:
62336 (F380)

Modbus Format:
–

Touchscreen Menu Path:
Home → Device → Parameters from USB

*P27.7 – **Service Code***

Type: n/a

Description:
Diagnostic parameter; for manufacturer's use only.

Range:
n/a

Modbus Decimal Value:
n/a

Default:
n/a

Modbus Address:
13120 (3340 hex)

Modbus Format:
n/a

Touchscreen Menu Path:
Home → Device → Service Code

"Auto Reset" Menu of Parameters

Auto Reset — *Type:* Read/Write

Description:
Enables the Auto Reset Feature.

Range:	*Modbus Decimal Value:*	*Default:*
• Off: The Auto Reset feature is disabled and all counters will be re-initialized.	• 0	• OFF (0)
• On: The Auto Reset feature is enabled.	• 1	

Modbus Address:
20736 (5100 hex)

Modbus Format:

Touchscreen Menu Path:
Advanced → Auto Reset → Auto Reset

Reset Delay — *Type:* Read/Write

Description:
The delay between the trip event and the automatic reset; if the start signal is active, the unit will re-start following the reset.
- If this is set to zero at any point, the Auto Reset feature will terminate and the counters will be re-initialized.
- When the delay is active, the Restart Pending parameter is set and the time remaining can be viewed in the Monitor menu.

Range:
0-7200 s

Modbus Decimal Value:

Default:
0

Modbus Address:
20737 (5101 hex)

Modbus Format:

Touchscreen Menu Path:
Advanced → Auto Reset → Reset Delay

Reset Attempts — *Type:* Read/Write

Description:
The number of restart attempts allowed before the Auto Reset terminates.
- If the Auto Reset has been successful, the counter is reset back to its maximum value when the unit has been running fault free for the Trip Free Time.
- If the Auto Restart has been unsuccessful, the counters are re-initialized by applying a reset signal or removing the start signal.
- If set to zero at any point, the Auto Reset feature will terminate and the counters will be re-initialized. The number of attempts remaining can be viewed in the Monitor menu.

Range:
0-10

Modbus Decimal Value:

Default:
0

Modbus Address:
14144 (3740 hex)

Modbus Format:

Touchscreen Menu Path:
Advanced → Auto Reset → Reset Attempts

Trip Free Time — *Type:* Read/Write

Description:

The time the unit must be run trip free before the counters are re-initialized back to zero.

- If set to zero at any point, the Auto Reset feature will terminate and the counters will be re-initialized.
- The Trip Free Time can be viewed in the Monitor menu.

Range: 0-7200 s

Modbus Decimal Value:

Default: 600

Modbus Address: 20736 (5100 hex)

Modbus Format:

Touchscreen Menu Path: Advanced → Auto Reset → Trip Free Time

Input Side Phase Loss — *Type:* Read/Write

Description:

Allows the user to select whether the unit will auto reset if an Input Side Phase Loss Trip occurs.

Range:
- Off: The trip will not auto reset.
- On: The trip will auto reset when the Reset Delay reaches zero.

Modbus Decimal Value:
- 0
- 1

Default:
- ON (1)

Modbus Address: 20800 (5140 hex)

Modbus Format:

Touchscreen Menu Path: Advanced → Auto Reset → Reset Trips → Input Side Phase Loss

Thermal — *Type:* Read/Write

Description:

Allows the user to select whether the unit will auto reset if a Thermal Trip occurs.

Range:
- Off: The trip will not auto reset.
- On: The trip will auto reset when the Reset Delay reaches zero.

Modbus Decimal Value:
- 0
- 1

Default:
- ON (1)

Modbus Address: 20801 (5141 hex)

Modbus Format:

Touchscreen Menu Path: Advanced → Auto Reset → Reset Trips → Thermal

Thyristor Firing — *Type:* Read/Write

Description:

Allows the user to select whether the unit will auto reset if a Thyristor Firing Trip occurs.

Range:
- Off: The trip will not auto reset.
- On: The trip will auto reset when the Reset Delay reaches zero.

Modbus Decimal Value:
- 0
- 1

Default:
- ON (1)

Modbus Address: 20802 (5142 hex)

Modbus Format:

Touchscreen Menu Path: Advanced → Auto Reset → Reset Trips → Thyristor Firing

Motor Side Phase Loss — *Type:* Read/Write

Description:
Allows the user to select whether the unit will auto reset if a Motor Side Phase Loss Trip occurs.

Range:	*Modbus Decimal Value:*	*Default:*
• Off: The trip will not auto reset.	• 0	
• On: The trip will auto reset when the Reset Delay reaches zero.	• 1	• ON (1)

Modbus Address: 20803 (5143 hex)

Modbus Format:

Touchscreen Menu Path:
Advanced → Auto Reset → Reset Trips → Motor Side Phase Loss

Control Voltage Low — *Type:* Read/Write

Description:
Allows the user to select whether the unit will auto reset if a Control Voltage Low Trip occurs.

Range:	*Modbus Decimal Value:*	*Default:*
• Off: The trip will not auto reset.	• 0	
• On: The trip will auto reset when the Reset Delay reaches zero.	• 1	• ON (1)

Modbus Address: 20805 (5145 hex)

Modbus Format:

Touchscreen Menu Path:
Advanced → Auto Reset → Reset Trips → Control Voltage Low

Sensing Fault — *Type:* Read/Write

Description:
Allows the user to select whether the unit will auto reset if a Sensing Fault Trip occurs.

Range:	*Modbus Decimal Value:*	*Default:*
• Off: The trip will not auto reset.	• 0	
• On: The trip will auto reset when the Reset Delay reaches zero.	• 1	• ON (1)

Modbus Address: 20806 (5146 hex)

Modbus Format:

Touchscreen Menu Path:
Advanced → Auto Reset → Reset Trips → Sensing Fault

Fan — *Type:* Read/Write

Description:
Allows the user to select whether the unit will auto reset if a Fan Trip occurs.

Range:	*Modbus Decimal Value:*	*Default:*
• Off: The trip will not auto reset.	• 0	
• On: The trip will auto reset when the Reset Delay reaches zero.	• 1	• ON (1)

Modbus Address: 20809 (5149 hex)

Modbus Format:

Touchscreen Menu Path:
Advanced → Auto Reset → Reset Trips → Fan

Low Current — *Type:* Read/Write

Description:
Allows the user to select whether the unit will auto reset if a Low Current Trip occurs.

Range:	*Modbus Decimal Value:*	*Default:*
• Off: The trip will not auto reset.	• 0	
• On: The trip will auto reset when the Reset Delay reaches zero.	• 1	• ON (1)

Modbus Address: 20810 (514A hex)

Modbus Format:

Touchscreen Menu Path:
Advanced → Auto Reset → Reset Trips → Low Current

Current Limit Time Out — *Type:* Read/Write

Description:
Allows the user to select whether the unit will auto reset if a Current Limit Time Out Trip occurs.

Range:	*Modbus Decimal Value:*	*Default:*
• Off: The trip will not auto reset.	• 0	
• On: The trip will auto reset when the Reset Delay reaches zero.	• 1	• ON (1)

Modbus Address: 20811 (514B hex)

Modbus Format:

Touchscreen Menu Path:
Advanced → Auto Reset → Reset Trips → Current Limit Time Out

Overload — *Type:* Read/Write

Description:
Allows the user to select whether the unit will auto reset if an Overload Trip occurs.

Range:	*Modbus Decimal Value:*	*Default:*
• Off: The trip will not auto reset.	• 0	
• On: The trip will auto reset when the Reset Delay reaches zero.	• 1	• ON (1)

Modbus Address: 20812 (514C hex)

Modbus Format:

Touchscreen Menu Path:
Advanced → Auto Reset → Reset Trips → Overload

Shearpin — *Type:* Read/Write

Description:
Allows the user to select whether the unit will auto reset if a Shearpin Trip occurs.

Range:	*Modbus Decimal Value:*	*Default:*
• Off: The trip will not auto reset.	• 0	
• On: The trip will auto reset when the Reset Delay reaches zero.	• 1	• ON (1)

Modbus Address: 20813 (514D hex)

Modbus Format:

Touchscreen Menu Path:
Advanced → Auto Reset → Reset Trips → Shearpin

PTC Thermistor — *Type:* Read/Write

Description:
Allows the user to select whether the unit will auto reset if a PTC Thermistor Trip occurs.

Range:	*Modbus Decimal Value:*	*Default:*
• Off: The trip will not auto reset.	• 0	
• On: The trip will auto reset when the Reset Delay reaches zero.	• 1	• ON (1)

Modbus Address: 20814 (514E hex)

Modbus Format:

Touchscreen Menu Path:
Advanced → Auto Reset → Reset Trips → PTC Thermistor

External — *Type:* Read/Write

Description:
Allows the user to select whether the unit will auto reset if an External Trip occurs.

Range:	*Modbus Decimal Value:*	*Default:*
• Off: The trip will not auto reset.	• 0	
• On: The trip will auto reset when the Reset Delay reaches zero.	• 1	• ON (1)

Modbus Address: 20815 (514F hex)

Modbus Format:

Touchscreen Menu Path:
Advanced → Auto Reset → Reset Trips → External

Communications — *Type:* Read/Write

Description:
Allows the user to select whether the unit will auto reset if a Communications Trip occurs.

Range:	*Modbus Decimal Value:*	*Default:*
• Off: The trip will not auto reset.	• 0	
• On: The trip will auto reset when the Reset Delay reaches zero.	• 1	• ON (1)

Modbus Address: 20813 (5150 hex)

Modbus Format:

Touchscreen Menu Path:
Advanced → Auto Reset → Reset Trips → Communications

Bypass — *Type:* Read/Write

Description:
Allows the user to select whether the unit will auto reset if a Bypass Trip occurs.

Range:	*Modbus Decimal Value:*	*Default:*
• Off: The trip will not auto reset.	• 0	
• On: The trip will auto reset when the Reset Delay reaches zero.	• 1	• ON (1)

Modbus Address: 20817 (5151 hex)

Modbus Format:

Touchscreen Menu Path:
Advanced → Auto Reset → Reset Trips → Bypass

COVER

TYPE: Read/Write

DESCRIPTION:
Allows the user to select whether the unit will auto reset if a Cover Trip occurs.

RANGE:	*MODBUS DECIMAL VALUE:*	*DEFAULT:*
• Off: The trip will not auto reset.	• 0	• OFF (0)
• On: The trip will auto reset when the Reset Delay reaches zero.	• 1	

MODBUS ADDRESS:
20818 (5152 hex)

MODBUS FORMAT:

TOUCHSCREEN MENU PATH:
Advanced → Auto Reset → Reset Trips → Cover

PHASE ROTATION

TYPE: Read/Write

DESCRIPTION:
Allows the user to select whether the unit will auto reset if a Phase Rotation Trip occurs.

RANGE:	*MODBUS DECIMAL VALUE:*	*DEFAULT:*
• Off: The trip will not auto reset.	• 0	• OFF (0)
• On: The trip will auto reset when the Reset Delay reaches zero.	• 1	

MODBUS ADDRESS:
20820 (5154 hex)

MODBUS FORMAT:

TOUCHSCREEN MENU PATH:
Advanced → Auto Reset → Reset Trips → Phase Rotation

OPERATION 4

TYPE: Read/Write

DESCRIPTION:
Allows the user to select whether the unit will auto reset if an Operation 4 Trip occurs.

RANGE:	*MODBUS DECIMAL VALUE:*	*DEFAULT:*
• Off: The trip will not auto reset.	• 0	
• On: The trip will auto reset when the Reset Delay reaches zero.	• 1	• ON (1)

MODBUS ADDRESS:
20821 (5155 hex)

MODBUS FORMAT:

TOUCHSCREEN MENU PATH:
Advanced → Auto Reset → Reset Trips → Operation 4

CURRENT SENSOR

TYPE: Read/Write

DESCRIPTION:
Allows the user to select whether the unit will auto reset if a Current Sensor Trip occurs.

RANGE:	*MODBUS DECIMAL VALUE:*	*DEFAULT:*
• Off: The trip will not auto reset.	• 0	
• On: The trip will auto reset when the Reset Delay reaches zero.	• 1	• ON (1)

MODBUS ADDRESS:
20822 (5156 hex)

MODBUS FORMAT:

TOUCHSCREEN MENU PATH:
Advanced → Auto Reset → Reset Trips → Current sensor

OPERATION 3

TYPE: Read/Write

DESCRIPTION:
Allows the user to select whether the unit will auto reset if an Operation 3 Trip occurs.

RANGE:	*MODBUS DECIMAL VALUE:*	*DEFAULT:*
• Off: The trip will not auto reset.	• 0	
• On: The trip will auto reset when the Reset Delay reaches zero.	• 1	• ON (1)

MODBUS ADDRESS:
20823 (5157 hex)

MODBUS FORMAT:

TOUCHSCREEN MENU PATH:
Advanced → Auto Reset → Reset Trips → Operation 3

OPERATION 1

TYPE: Read/Write

DESCRIPTION:
Allows the user to select whether the unit will auto reset if an Operation 1 Trip occurs.

RANGE:	*MODBUS DECIMAL VALUE:*	*DEFAULT:*
• Off: The trip will not auto reset.	• 0	
• On: The trip will auto reset when the Reset Delay reaches zero.	• 1	• ON (1)

MODBUS ADDRESS:
20824 (5158 hex)

MODBUS FORMAT:

TOUCHSCREEN MENU PATH:
Advanced → Auto Reset → Reset Trips → Operation 1

OPERATION 2

TYPE: Read/Write

DESCRIPTION:
Allows the user to select whether the unit will auto reset if an Operation 2 Trip occurs.

RANGE:	*MODBUS DECIMAL VALUE:*	*DEFAULT:*
• Off: The trip will not auto reset.	• 0	
• On: The trip will auto reset when the Reset Delay reaches zero.	• 1	• ON (1)

MODBUS ADDRESS:
20825 (5159 hex)

MODBUS FORMAT:

TOUCHSCREEN MENU PATH:
Advanced → Auto Reset → Reset Trips → Operation 2

OPERATION 5

TYPE: Read/Write

DESCRIPTION:
Allows the user to select whether the unit will auto reset if an Operation 5 Trip occurs.

RANGE:	*MODBUS DECIMAL VALUE:*	*DEFAULT:*
• Off: The trip will not auto reset.	• 0	
• On: The trip will auto reset when the Reset Delay reaches zero.	• 1	• ON (1)

MODBUS ADDRESS:
20826 (515A hex)

MODBUS FORMAT:

TOUCHSCREEN MENU PATH:
Advanced → Auto Reset → Reset Trips → Operation 5

Trip Code Descriptions

Trip Codes (from Trip Log)	
Number & Name	***Description***
101 Input Side Phase Loss	Phase L1 missing at the instant of start up. • The L1 phase is either missing or at a very low level. • Check all incoming connections. • If a main contactor is being controlled by a digital output set to "Running," check that "Contactor Delay" (under "Start Settings") is sufficient.
102 Input Side Phase Loss	Phase L2 missing at the instant of start up. • The L2 phase is either missing or at a very low level. • Check all incoming connections. • If a main contactor is being controlled by a digital output set to "Running," check that "Contactor Delay" (under "Start Settings") is sufficient.
103 Input Side Phase Loss	Phase L3 missing at the instant of start up. • The L3 phase is either missing or at a very low level. • Check all incoming connections. • If a main contactor is being controlled by a digital output set to "Running," check that "Contactor Delay" (under "Start Settings") is sufficient.
104 - 117 Input Side Phase Loss	Any or all phases missing when the motor is being controlled (running). • L1, L2, or L3 are missing or at a very low level. • Check all incoming connections. • Check any fuses/breakers incorporated in the power circuit.
201 Maximum Temperature Exceeded	Internal heatsink temperature has exceeded 80°C. • It is possible the SR55 is operating outside specified limits. • Check enclosure ventilation and airflow around the SR55. • If the unit trips immediately, the internal temperature sensor could be faulty.
208 Thermal Sensor Trip	Thermal sensor failure. • The internal temperature sensor has failed. • Contact AutomationDirect.
300-307 Thyristor Firing Trip	One or more of the internal control thyristors (SCRs) have failed to turn on properly (In-Line "Firing Mode") • The SR55 has detected that the SCRs are not operating as expected. • Check all incoming and outgoing connections.
350-357 Thyristor Firing Trip	One or more of the internal control thyristors (SCRs) have failed to turn on properly (Delta "Firing Mode"). • The SR55 has detected that the SCRs are not operating as expected. • Check all incoming and outgoing connections.
401 Motor Side Phase Loss	One or all of the phases are missing on the motor side during the instant of start up • T1, T2, or T3 are missing or at a very low level. • Check that the motor is connected to T1, T2 and T3. • Ensure any disconnecting device between the SR55 and the motor is closed at the instant of start up.
402-403 Motor Side Phase Loss	One or all of the phases are missing on the motor side during the instant of start up when the motor is being controlled. • T1, T2 or T3 are missing or at a very low level. • Check all incoming and outgoing connections.
601 Control Voltage Too Low	The internal control supply of the SR55 level has fallen to a low level. • Can be caused by a weak 24VDC/115VAC/230VAC control supply. • Ensure 24VDC/115VAC/230VAC supply meets the requirements specified in "Electrical Installation" Chapter 2 or the Quick Start Guide.
701-710 Sensing Fault Trip	One or more of the internal control thyristors (SCRs) have failed to turn on properly. • The SR55 has detected that the SCRs are not operating as expected. • Check connections all incoming and outgoing connections.
801-802 Fan Problem	One or more of the internal cooling fans has failed. • To ensure the heatsink is cooled sufficiently, the SR55 will trip if the fans fail to operate. • Check SR55 fans for signs of damage or contamination.
1001 Short Circuit Thyristor	One or more of the internal control thyristors (SCRs) have failed short circuit. • The SR55 has detected that the SCRs are not operating as expected. • Check all incoming and outgoing connections.
1101 Low Current Trip	The motor current has been lower than the "Low Trip Level" for the "Low Trip Time" (under "Motor Protection"). • This trip is not active during soft start and soft stop and is "off" by default. • If the Low Current Trip is not required, turn "off" in "Trip Settings."

Trip Codes from Trip Log (continued)	
Number & Name	***Description***
1201 Current Limit Timeout Trip	The motor has been held in current limit longer than the "Start Current Limit Time." • It is likely that the current limit level has been set too low for the application. • Increase the current limit level or timeout period.
1202 Current Limit Timeout Trip	The motor has been held in current limit longer than the "Stop Current Limit Time." • It is likely that the current limit level has been set too low for the application. • Increase the current limit level or timeout period.
1301 Overload Trip	The "Overload" has exceeded 100%. • The SR55 is attempting to start an application that is outside its capacity or it is starting too often. • Refer to the overload trip curves to determine whether the SR55 has been sized correctly.
1302 Overload Trip	The motor current has exceeded 475% (i-SR55) for a time greater than 250ms. • The SR55 is attempting to start an application that is outside its capacity with a "high current limit level" set. • Refer to the overload trip curves to determine whether the SR55 has been sized correctly, and check current limit level.
1401 Shearpin Trip	The motor current has been higher than the "Shearpin Trip Level" for the "Shearpin Trip Time." • This trip is not active during soft start and soft stop, and is "off" by default. • If "Shearpin Trip" is not required, turn "off" in "Trip Settings."
1501 PTC Thermistor Trip	The PTC thermistor value has exceed the trip level (4kΩ). • The PTC thermistor connected to the PTC input has exceeded its response temperature, or the PTC input is open circuit. • If the PTC Trip is not required, turn "off" in "Trip Settings."
1701 Communications Trip	Communications failure. • A parameter has not been written to or polled in the time set in the "Timeout" period (under "Device Networks"). • If the "Communications Trip" is disabled, the SR55 will not be stopped by the communications failure.
1801-1802 Bypass Relay Trip	One or more of the internal bypass relays has failed to close. • The internal bypass relay has failed or the control supply is to weak. • Ensure 24VDC supply meets the requirements specified in "Electrical Installation" Chapter 2 or the Quick Start Guide.
1803 Bypass Relay Trip	One or more of the internal bypass relays has failed to open. • The internal bypass relay has failed or the control supply is too weak. • Ensure 24VDC supply meets the requirements specified in "Electrical Installation" Chapter 2 or the Quick Start Guide.
1901 Cover Open, Close to Enable Motor Start	The SR55 cover is open. • The cover is open or not closed properly. • Close cover, or if Cover Trip is not required, turn off in "Trip Settings."
2001 Remote Start is Enabled	The Remote Start signal is active. • The "Start/Stop" signal was active during power up or Reset. • Turn off "Start/Stop," or if Remote Start trip is not required, turn "off" in "Trip Settings."
2101 Rotation L1 L2 L3 Trip	The input phase rotation is RYB (L1, L2,L3). • The phase rotation is opposite to that required. • Change phase rotation, or if "RYB" trip is not required, turn "off" in "Trip Settings."
2102 Rotation L1 L3 L2 Trip	The input phase rotation is RBY (L1, L3,L2). • The phase rotation is opposite to that required. • Change phase rotation, or if "RBY" trip is not required turn "off" in "Trip Settings."
2013 Rotation Undetermined Trip	The phase rotation is undetermined. • The SR55 is unable to determine whether the input phase rotation is L1, L2, L3 or L1, L3, L2. • Check all incoming and outgoing connections.
2201-2209 MPU Trip	Internal SR55 Failure of the main processing unit. • The SR55 has failed internally and is unable to recover automatically. • Cycle the control supply. • If the fault is not cleared, then contact AutomationDirect.

Fail Safe Codes

Main Board Trip (2402 – 2436)

A trip number in the range of 2402 to 2436 indicates that a process on the main board has been affected in some way and is unable to recover automatically.

- *The trip is turned ON and OFF via the "Main Board Trip" (Advanced / Trips).*
- *The default for this trip is ON.*
- *The trip MUST be reset using the either the digital input, touchscreen, or bus command depending on the Control Method set.*
- *As this is a special case, it is NOT possible to reset this trip by cycling the control supply.*

Fail Safe Codes Associated with the Main Board	
Code #	***Description***
2402	Initialization process has been unsuccessful.
2404	Initialization of the Parameters has been unsuccessful.
2406	Initialization of the Overload has been unsuccessful.
2408	Initialization of the Parameter Read has been unsuccessful.
2410	Initialization of the Overload Read has been unsuccessful.
2412	Initialization of the Current measurement has been unsuccessful.
2420	A main process on the Main Board has been affected and is unable to recover automatically.
2422	A main process on the Main Board has been affected and is unable to recover automatically.
2424	A main process on the Main Board has been affected and is unable to recover automatically.
2426	Communication between the Main Board and Touchscreen Board has been affected and is unable to recover automatically.
2428	The modbus communication has been affected and is unable to recover automatically.
2430	The parameter save has been unsuccessful.
2432	The logging function has been unsuccessful.
2434	A main process on the Main Board has been affected and is unable to recover automatically.
2436	The Anybus communication has been affected and is unable to recover automatically.

Touchscreen Trip (2501 – 2581)

A trip number in the range of 2501 to 2581 indicates that a process on the touchscreen board has been affected in some way and is unable to recover automatically.

- *The trip is turned ON and OFF via the "Touchscreen Trip" (Advanced / Trips).*
- *The default for this trip is OFF.*
- *With the trip OFF the touchscreen display may display the 'start up' screen momentarily as it recovers automatically.*
- *When the trip is turned ON it is reset using the either the digital input or touchscreen or bus command, depending on the Control Method set.*
- *It is possible to reset this trip by cycling the control supply.*

Fail Safe Codes Associated with the Touchscreen Board		
Local Touchscreen Code	***Remote Touchscreen Code***	***Description***
2501 – 2529	2551 – 2579	A main process on the Touchscreen Board has been affected.
2530	2580	Communication between the Main board and Touchscreen Board has been affected.
2531	2581	The touchscreen has become unresponsive.

When a remote touchscreen is used the same trips can be generated. However, to discriminate between the remote and local (built in) 50 is added to each code.

Logging Trip (2601 – 2603)

Trip numbers that are in the range of 2601 to 2603 indicate that a process associated with the logging has been affected in some way and has been unable to recover automatically.

- *The trip is turned ON and OFF via the "Logging Trip" (Advanced / Trips).*
- *The default for this trip is OFF.*
- *With the trip OFF, the logging function will temporarily be disabled if a continual failure is detected.*
- *When the trip is turned ON, it is reset using the either the digital input or keypad or bus command, depending on the Control Method set.*
- *It is possible to reset this trip by cycling the control supply.*

Fail Safe Codes Associated with the Logging Function	
Code #	***Description***
2601	The initialization of the event logging function has been unsuccessful for 20 consecutive attempts.
2602	The event logging function has been unsuccessful for 20 consecutive attempts.
2603	The SD card could not be accessed 20 consecutive attempts.

Fail Safe Trip Codes

As part of the firmware upgrade procedure or if you experience a Fail Safe Trip we recommend the following steps:

Parameters have not been set or do not need to be retained.

- *Upgrade firmware (Device / Upgrade Firmware). See Appendix A for more details.*
- *Set the defaults (Device / Reset Default).*

Parameters have been set and need to be retained.

- *Upgrade firmware (Device / Upgrade Firmware). See Appendix A for more details.*
- *Upload parameters to USB stick (Device / Parameters to USB). Ensure that the SR55 is NOT displaying ANY trip code. If a trip code is displayed then reset via the digital input, touchscreen, or bus command depending on the Control Method set.*
- *Set the defaults (Device / Reset Default).*
- *Down load the parameters from the USB stick to the SR55 (Device/ Parameters from USB).*
- *Turn 'Touchscreen Trip' OFF (Advanced / Trips).*
- *Turn 'Logging Trip' OFF (Advanced / Trips).*
- *Save Parameters (Advanced / Save Parameters).*

Saving and Loading an SR55 Configuration File

Operating parameters of the unit can be copied onto a USB flash drive. To do this, attach the USB flash drive into the USB port under the front cover just above the touchscreen.

ADC part number USB-FLASH is a 4GB SanDisk USB flash drive that has been verified to work with the SR55. Other flash drives may be too wide to fit, or may not perform correctly.

From the Device Setting menu on the SR55 Home screen, scroll down to the third menu and select "Parameters to USB." This will construct a file called PARAMS.CSV, and copy it to a PARAM folder on the stick. There is no way to rename the file during the save process. If you have another PARAMS.CSV file on the flash drive, it will be overwritten. It is suggested that parameter files be archived in a separate folder with a unique name other than PARAM. A new parameter configuration must be configured on the SR55 and saved using the method described above. It is not recommended to open the .CSV file and edit parameters on a PC and resave the PARAMS file.

There is also the option to copy "Parameters From USB," which gives the ability to restore or set parameters to a known state. This function will only work on a file called PARAMS.CSV in the PARAM folder of the stick. Any other files in that folder will be ignored.

Saving a Log file

A log file is for AutomationDirect to help solve performance issues that may arise. From the Log menu on the Home screen, scroll down to the second menu and select "Download Log File." The LOG folder is created when the user connects a flash drive and selects "Download Log file" from the LOG menu. As an aid to help analyses, the log file(s) PARAMS.CSV is also created and copied into the LOG folder.

Principles of iERS (intelligent Energy Recovery System)

Chapter 4

Table of Contents

Chapter 4: Principles of iERS (intelligent Energy Recovery System) 4–1

Principles of the iERS 4–2

Enabling Intelligent Energy Recovery System (iERS) 4–2

Principles of iERS. 4–3

Advantages of iERS 4–4

How Much Energy? 4–5

Estimating Energy Savings 4–6

iERS with the SR55 System 4–7

Chapter 4 Glossary of Terms 4–8

Principles of the iERS

Enabling Intelligent Energy Recovery System (iERS)

iERS can produce energy savings in suitable applications. However, the user should have an understanding of the application and load characteristics before enabling the feature.

Loads which exhibit frequent changes in motor torque may cause the SR55 soft starter to switch rapidly between the iERS 'on' state and the 'bypassed' state as the motor torque changes. If left unchecked, such switching may cause premature wear of the internal bypass components, and may invalidate the warranty.

If the loaded/unloaded state changes more than 4 times per minute, iERS should not be enabled.

Applications that are typically well suited to the iERS feature include: Artificial Lift Pump Jacks, Injection Molding Machines, Mixers, Saws, Rolling Mills, Grinders, Hydraulic Pumps, Crushers, Conveyors, Compressors and Vertical Transport applications.

Principles of iERS

Every wound-field electric motor must consume some minimum amount of energy to provide a magnetic field which enables it to work at all. With DC motors the field is under separate control, so that the amount of magnetizing energy can be adjusted to be sufficient to overcome losses and provide an armature reaction appropriate to the load. The squirrel cage AC induction motor has no such provision, with the result that energy is wasted at any load less than its rated full load (at full speed). When a squirrel-cage motor is supplied at a constant terminal voltage, as when it is connected directly to the supply without a controller of any kind, the strength of the field flux is fixed by the supply voltage. At normal running speed the field will take a fixed quantity of energy regardless of the torque demanded by the mechanical load. The energy required to support the load torque is determined by the torque demand. As load torque increases, the rotor slows down a little (i.e. 'slip' increases), causing induced rotor currents to also increase in order to increase the torque. These additional currents in the rotor are balanced by additional current in the stator coils. Conversely, if load torque demand falls, the slip decreases, the rotor currents decrease, and the current in the stator decreases accordingly. But at constant terminal voltage, the current providing the stator field flux remains unchanged at any level of load torque demand. As a consequence, the efficiency of an induction motor decreases as the load decreases.

Figure 4.1.1: Typical duty cycle for a machine load where the Torque Demand varies.

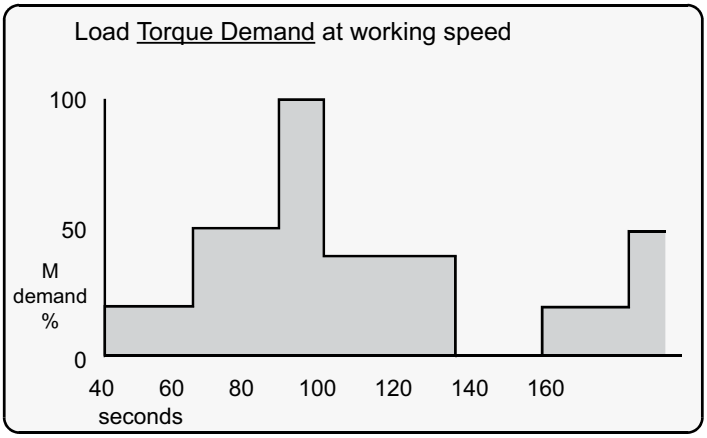

Figure 4.1.2:
Torque Demand converted to an equivalent current with the motor magnetizing current added

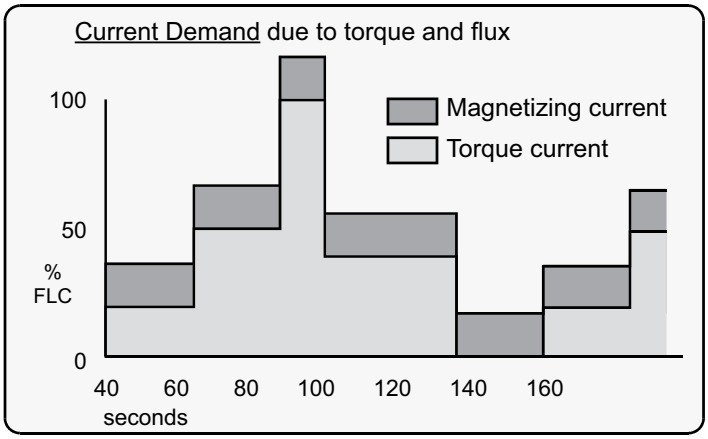

Advantages of iERS

A soft starter with an iERS energy-optimizing feature alters the motor operation. The iERS function reduces the terminal voltage applied to the motor so that the energy needed to supply the field is more closely proportioned to the torque demand. The effect is shown in the Figure below.

Figure 4.2.1: 'Full Speed' end of the conventional Torque/Current curves.

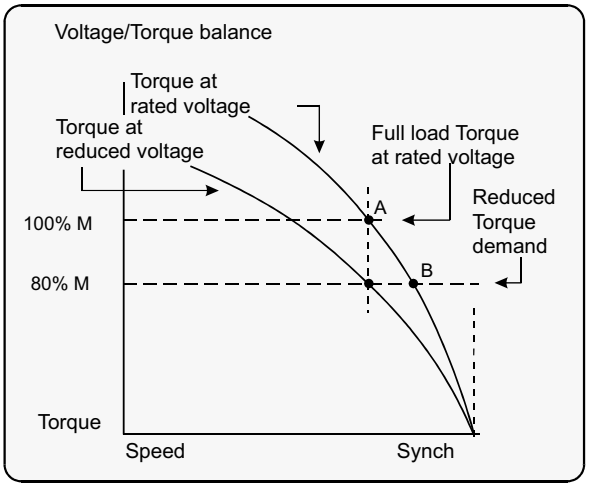

The present considerations do not affect soft-starting options or strategies.

Point A on the current curve is the operating point of the motor when the motor terminal voltage is at its 'nominal' or rated value, and when the load is the maximum for which the motor is rated.

If the load decreases, a motor supplied at a fixed voltage will speed up slightly, the current demand will reduce, and the operating point moves along the curve to point "B". Because the torque developed by a motor is proportional to the square of the applied voltage, lowering the terminal voltage reduces the torque. If the reduced voltage is correctly chosen, the working point at the reduced torque demand becomes the point "A". By reducing the terminal voltage, the motor has in effect been 'exchanged' for one which has a lower rated power output. A reduced terminal voltage also means a reduced field energy requirement, and this simple relationship enables the iERS function to maintain the efficiency of the motor over nearly the entire load range from 'no load' upwards. In practical terms, 'no load' means no external load. There are still internal mechanical and electrical losses to overcome – friction and windage of the rotor at speed, and the electrical heating and hysteresis losses. The ideal response to the 'no load' condition would be to supply precisely the amount of magnetizing current needed to provide the armature reaction to balance the losses. This is what the iERS seeks to do automatically and continuously.

Additional Benefits in Practice

It is normal to select a standard motor with a rating somewhat higher than the maximum demand of the driven load. The motor selected for any given application will almost certainly be over-rated for this reason alone, and therefore energy could be saved even at full load when supplied at rated voltage. Furthermore, there are those applications where the size of motor has to be chosen to provide for high loadings which occur only intermittently, or for an arduous start, even though the load demand at most times is much lower.

How Much Energy?

The amount of energy used by a squirrel-cage induction motor operating with a soft starter in energy-optimizing (iERS) mode is shown in the following figure (Figure 4.5.1), for the same duty cycle as Figure 4.1.2. By reducing the voltage when torque demand is below maximum, the magnetizing current is proportioned to the torque current.

Compare Figure 4.5.1 (energy-optimizing) with Figure 4.1.2 (non-optimizing). (These graphical representations are illustrative only and not to scale.) Arriving at any exact figure for the energy cost saved requires each individual case to be examined in detail, taking into account the motor rating, type, and any special characteristics such as load, load characteristics, duty cycle, supply voltage, and the cost of electricity.

Figure 4.5.1: Energy Savings

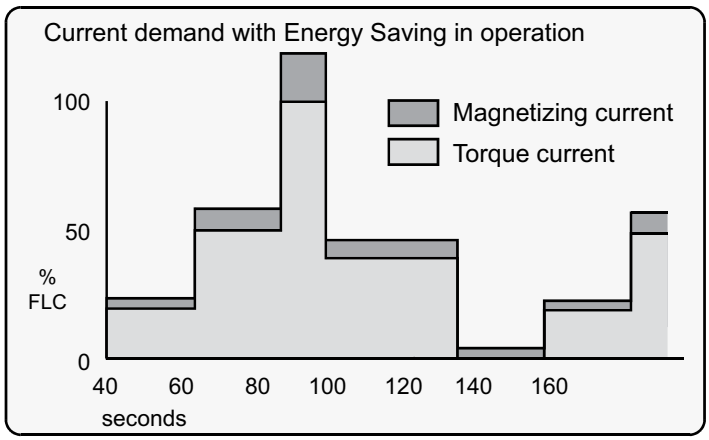

The calculations to cover all the likely or possible conditions would be laborious. An empirical method for arriving at a usefully realistic estimate has been devised. Used with a proper sense of engineering circumspection, the tables in the "Estimating Energy Savings" sub-section allow a user to gain a reasonably close estimate of the savings to be achieved within the motor by using the SR55 optimizing soft starter. The method does not include any additional savings and benefits conferred by other sources, such as:

- *reduction of heating losses in cabling because of the lower voltages;*
- *potential reduction of maximum demand charges;*
- *further energy savings and other benefits deriving from the soft-starting process itself;*
- *reduced total energy demand;*
- *reduced wear and tear;*
- *reduced maintenance and replacement costs.*

Estimating Energy Savings

Basis for estimations:

- *3-phase squirrel cage induction motor, standard type.*
- *Supply: 380 to 440V, 50Hz.*
- *Supply voltage > minimum working voltage on motor rating plate.*
- *Operation 30% rated nameplate full load.*

Table 4.6.1: Estimations

Energy Savings Estimations – Table 4.6.1			
Motor Size	***kW***	***HP***	***Estimated Savings (% rated kW)***
Less than	5	7.5	10
	22.5	30	6.5
	55	75	3.5
	110	150	2.5
More than	110	150	1.5

Table 4.6.2: Modifying Factors

Energy Savings Modifying Factors – Table 4.6.2			
Motor Poles		***Motor Slip***	
Number of Poles	***Add (% kW)***	***% Slip***	***Add (% kW)***
2	-0.5	0.5	-0.5
4	0	2	0
6	0.5	3.3	0.5
8	1	5	1

Examples of estimated energy savings:

1) 37.5 kW 4-pole motor
   From Table 1, use the estimated savings figure for the next higher rating, i.e. 55 kW.
   The savings would be approximately 3.5% x 37.5 kW = 1.3125 kW.
   For the 30% loaded motor, the savings are 1.3125 kW / (30% x 37.5 kW) = 11.6% savings.
2) 37.5 kW 2-pole motor
   From Table 1, use the estimated savings figure for the next higher rating, i.e. 55 kW.
   From Table 2, apply the pole-number factor of -0.5 %.
   The savings would be approximately (3.5 % - 0.5 %) x 37.5 kW = 1.125 kW.
   For the 30% loaded motor, the savings are 1.125 kW / (30% x 37.5 kW) = 10% savings.
3) 37.5 kW 2-pole 'low slip' motor
   From Table 1, use the estimated savings figure for the next higher rating, i.e. 55 kW.
   From Table 2, apply the pole-number factor of -0.5 % and the %-slip factor of -0.5%.
   The savings would be approximately (3.5 % - 0.5 % - 0.5 %) x 37.5 kW = 0.938 kW.
   For the 30% loaded motor, the savings are 0.938 kW / (30% x 37.5 kW) = 8.3% savings.

iERS with the SR55 System

During start-up, the SR55 software uses a patented method to compute and store a reference value for the power factor. When the motor has reached full speed and is driving the load at the demanded torque, the SR55 enters the 'motor running' stage. At this stage, if required, the motor may also operate in 'iERS Mode'. Entering this mode can be pre-set from the SR55 touchscreen and stored for automatic operation, which will suit the majority of applications where it is required. This is the default operating mode for the SR55. It can also be toggled on and off while running by using either the iERS button in the Advanced Settings of the touchscreen, or through external circuitry connected to one of the programmable inputs and controlled by the driven process.

'iERS' Intelligent Energy Recovery System will sense when at a level where we will gain no benefits from Energy Saving, the SR55 will energize the bypass relays, and there will be no losses from the motor controller.

Energy Saving will try to be active at all times and is fully automatic. The bypass relays will only energize depending upon the measured thermal capabilities of the unit, percentage loading of the motor, and the power factor, etc.

The bypass relays will open at 80% loading of the motor current set and enter the energy saving mode. The relays will not re-energize until at least we are a level of 90% of the motor current set, or we have surpassed the measured thermal capabilities of the unit, or the power factor is close to full loading.

There should be even higher levels of energy saving, as when the motor is fully loaded the relays will be energized and we will have no losses in the thyristors. We will therefore gain maximum saving which is especially beneficial on typical cyclic loading applications such as pump jacks, injection molding machines, mixers, saws, etc.

In iERS mode the reference power factor is continuously compared with the running power factor. The software continuously uses this comparison to compute and adjust the firing point of the thyristors in order to maintain the best power factor. This method of continuous control minimizes wasted energy caused by overfluxing the motor. It also maintains the power factor at the most appropriate value for every condition of load demand. This can produce a significant reduction in the kVA demand.

This is an operating condition that may, at light or partial load conditions, provide the benefit of energy saving and if selected, is continuous from the dwell period until a STOP command is initiated or the mode is disabled. It should be noted that this function is inhibited by the software if the current being drawn by the motor exceeds 80% of the set current of the SR55 (at full voltage when the motor enters its running stage with the iERS mode selected).

The method of power factor management described does not affect motor performance, nor does it detract from the motor's capability to respond to changes in load demand. This feature of the SR55 Soft Starter is a purely electrical function which has the effect of ensuring that the motor delivers the torque demanded at all times, but allows it to draw only the precise amount of magnetizing current required to support that torque output. Without this feature, the motor would draw the maximum magnetizing current regardless of load. The iERS function cannot improve the power factor beyond what it would ordinarily be at full load, but it does make the optimum improvement possible at any partial load.

Chapter 4 Glossary of Terms

Breakaway Torque: The minimum torque required to achieve rotor movement for the motor with its load.

Current Limit: The current at which the ramp is held. For the SR55, current limit is only active during start-up where it contributes to the motor control function. This feature is particularly useful when starting high-inertia loads that require an extended start-up period. (See also Overload Level.)

Direct-On-Line (DOL): The direct connection and disconnection of a motor from the AC main supply by means of a contactor or switch. Acceleration and operation is at full mains voltage only.

iERS: Intelligent Energy Recovery System. An advanced motor control technology proven to reduce the energy consumed in fixed speed motor applications. It matches the power consumption to the load required by intelligently monitoring and regulating energy consumption, voltage, current, and power factor during the motor starting and running stages. iERS automatically bypasses itself when it is not needed, and continues monitoring to re-engage itself as needed.

Inrush Current or Locked Rotor Current: The current that flows at the instant of connection of a motor to the power source. It is limited by the impedance presented by a de-energized motor and the applied voltage. Usually expressed as a multiple of motor full-load current.

Kick-start Voltage: The percentage of supply voltage applied before commencing ramp-up when a load has a high breakaway torque and the standard settings of pedestal voltage may not allow sufficient torque to be developed by the motor to cause acceleration.

Locked Rotor Current: Same as Inrush Current (defined above).

Overload Level: The level of current at which the controller overload begins to integrate. For the SR55, the overload detector is always active and provides protection against prolonged over-current operation.

Pedestal Voltage: The voltage that the unit applies to the motor at start-up. It is expressed as a percentage of the rated supply voltage.

Power Factor: The ratio, expressed as a trigonometric cosine, of the real power consumption to the apparent power consumption.

Top of Ramp (TOR): The unit achieves Top of Ramp (TOR) when it completes the start-up stage of motor control. (This occurs when the voltage applied to the motor first equals the main supply voltage.)

Soft-start: The regulation, by electronic means, of the supply voltage from an initial low value to full voltage during the starting process. This overcomes the inherent drawbacks of a switched supply. The motor torque is modified in proportion to the square of the voltage applied.

Trip: A trip occurs when the unit removes power to the motor because its operation equals the limit imposed by one of its self-protection features.

Chapter 5: Communications

Chapter 5

Table of Contents

Chapter 5: Communications. 5–1
SR55 Communications Overview. 5–2
Modbus Serial Communications Overview 5–2
Modbus TCP Network Communications Overview 5–2
EtherNet/IP Network Communications Overview. 5–2
Modbus Serial Communications 5–3
Modbus RTU Communications Interface 5–3
Modbus RTU Connections 5–3
Modbus Communications Configuration 5–4
Transmission Modes. 5–4
Message Structure For RTU Mode 5–4
Supported Functions 5–5
Memory Map 5–6
Message Timing 5–6
Network Communications – EtherNet/IP and Modbus TCP 5–7
Communication Module Overview. 5–7
Module Installation – SR55-CM-ENETIP2, SR55-CM-ENETIP and SR55-CM-MODTCP. 5–7
SR55 Configuration 5–7
IP Address Configuration 5–7
Communication Module Front Panel Indicator Lights 5–8
Modbus TCP Network Communications. 5–8
EtherNet/IP Network Communications 5–9
EtherNet/IP Control (SR55-CM-ENETIP2) 5–9
EtherNet/IP Control (SR55-CM-ENETIP) 5–12
EDS File 5–12
Using the IP Configuration Tool (IPconfig). 5–13
Connecting to the SR55-CM-ENETIP2 Module through I/O (Implicit Messaging) 5–17
Connecting to the SR55-CM-ENETIP Module through I/O (Implicit Messaging). 5–20
Connecting to the SR55-CM-ENET Module through Explicit Message:. 5–23
Explicit Message Instruction Examples (from Productivity Series CPU) 5–24

SR55 Communications Overview

Modbus Serial Communications Overview

All SR55 soft starters have a built-in RJ12 serial port that can be used to configure and to control one SR55 from one RS-485 master controller, with no additional communications components required (other than RS-485 cabling). Multiple SR55 soft starters can be controlled from a single RS-485 master controller with the use of one optional serial Modbus communication splitter (SR55-SPLT) per soft starter. An RJ45 female to RJ12 male cable adapter (SR55-RJ45-RJ12) is available for easier cable connection. Examples of Modbus masters are SR55-KPD-REM, PLC, or HMI.

Modbus TCP Network Communications Overview

Multiple SR55 soft starters can be networked for configuration and control from a single Modbus TCP master controller. This type of network control requires one optional Modbus TCP communication module (SR55-CM-MODTCP) per SR55 soft starter.

EtherNet/IP Network Communications Overview

Multiple SR55 soft starters can be networked for configuration and control from a single EtherNet/IP master controller. This type of network control requires one optional EtherNet/IP communication module (SR55-CM-ENETIP) per SR55 soft starter.

For communications, ensure that the SR55 "Timeout" parameter setting is > o. Otherwise, the SR55 will fault as soon as communication is enabled. (Home --> Device --> Networks --> Timeout ms)

If using Modbus RTU / Modbus TCP / EtherNet/IP communication for control, the Digital Inputs are disabled. The Digital Outputs will still function as configured.
If using Modbus RTU / Modbus TCP / EtherNet/IP communication for monitoring only, then the Digital Inputs and Outputs will function as configured if the Control Method is set to User Programmable, Two Wire, or Three Wire control.

If using Modbus RTU (RJ12 port) for communications, an SR55-CM-xxxx module must NOT be installed in the bottom communication port. The presence of a communications module will cause interference with the Modbus RTU communications.

Modbus Serial Communications

Modbus RTU Communications Interface

All SR55 soft starters support serial Modbus RTU protocol (slave) communications. The serial RS-485 communications are accessible from the built-in RJ12 port, as shown below.

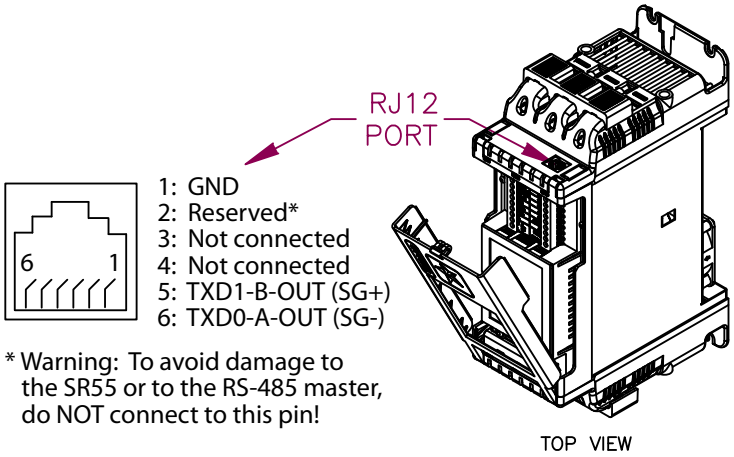

Modbus RTU Connections

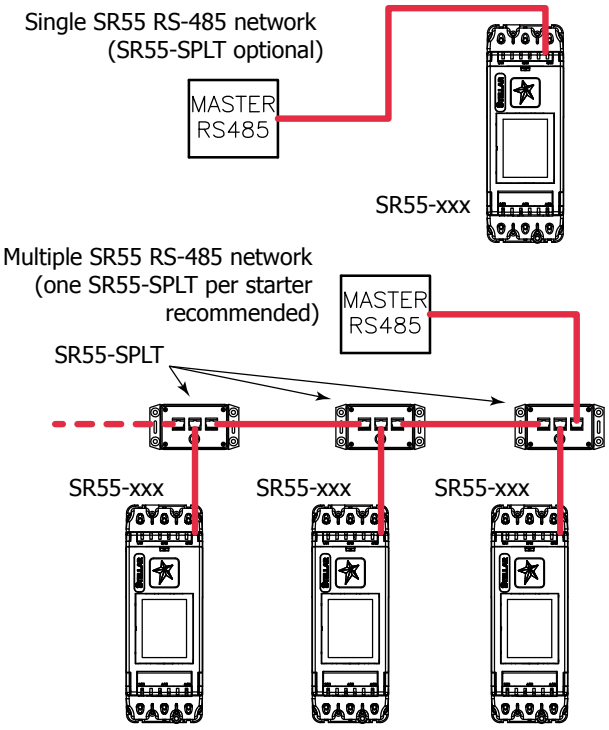

Serial Modbus Communication Splitter

Information for the optional SR55-SPLT serial Modbus communication splitter is found in "Accessories" Chapter 6. (An SR55-RJ45-RJ12 adapter can be used to simplify cabling between the splitter's RJ45 ports and the SR55's RJ12 port.)

Modbus Serial Communications (continued)

Modbus Communications Configuration

The Modbus communication settings are accessible from the Device menu:

- *Device >> Networks >> Modbus Network Settings >> Address (1 – 32)*
- *Device >> Networks >> Modbus Network Settings >> Baud (9600 – 115200)*
- *Device >> Networks >> Modbus Network Settings >> Parity (Odd / Even)*
- *(Data bits = 8, Stop bits = 1)*

The communication parameters should be set before connecting the Modbus master.

Transmission Modes

ASCII and RTU transmission modes are defined in the Modbus protocol specification. SR55 uses only the RTU mode for the message transmission.

Message Structure For RTU Mode

The Modbus RTU structure uses a master-slave system for message exchange. In the case of the SR55 system, it allows up to 32 slaves, and one master. Every message begins with the master making a request to a slave, which responds to the master in a defined structure. In both messages (request and answer), the used structure is the same:

- *Address, Function Code, Data and CRC.*

Master (request message):

Address (1 byte)	Function (1 byte)	Request Data (n bytes)	CRC (2 bytes)

Slave (response message):

Address (1 byte)	Function (1 byte)	Response Data (n bytes)	CRC (2 bytes)

Address

The master initiates the communication by sending a byte with the address of the destination slave. When responding, the slave also initiates the message with its own address. Broadcast to address 0 (zero) is not supported.

Function Code

This field contains a single byte, where the master specifies the type of service or function requested to the slave (reading, writing, etc.). According to the protocol, each function is used to access a specific type of data.

Data Field

The format and contents of this field depend on the function used and the transmitted value.

CRC

The used method is the CRC-16 (Cyclic Redundancy Check). This field is formed by two bytes; where first the least significant byte is transmitted (CRC-), and then the most significant (CRC+). The CRC calculation form is described in the Modbus RTU protocol specification.

Modbus Serial Communications (continued)

Supported Functions

Modbus RTU specification defines the functions used to access different types of data.

- *SR55 parameters are defined as holding type registers.*
- *For Modbus RTU/TCP Client devices that use Modicon style addressing, place a 4 as the high digit followed by the Modbus address defined in the parameter mapping table. Note that SR55 Modbus addressing starts at zero; not 1 as some devices do.*
- *SR55 32-bit parameters are High Word / Low Word in Modbus format.*

The following services are available:

Read Holding Registers

Description: reading register blocks of holding register type (block R/W limited to 8 registers).

- *Function code: 03*

Modbus Function 03 Transaction Table			
Query		***Response***	
Field	***Hex Byte***	***Field***	***Hex Byte***
Slave address	01	Slave address	01
Function	03	Function	03
Start address Hi	00	Byte count	02
Start address Lo	01	Data Hi	01
No of registers Hi	00	Data Lo	2C
No of registers Lo	01	CRC Lo	B8
CRC Lo	D5	CRC Hi	09
CRC Hi	CA		

Before writing to the SR55, initiate several Modbus Reads to ensure that the master's addressing and configuration are correct.

Write Single Register

Description: writing in a single register of the holding type.

- *Function code: 06*

Modbus Function 06 Transaction Table			
Query		***Response***	
Field	***Hex Byte***	***Field***	***Hex Byte***
Slave address	01	Slave address	01
Function	06	Function	06
Address Hi	00	Address Hi	02
Address Lo	0C	Address Lo	0C
Force data Hi	00	Force data Hi	00
Force data Lo	09	Force data Lo	09
CRC Lo	48	CRC Lo	88
CRC Hi	0C	CRC Hi	77

Modbus Serial Communications (continued)

Write Multiple Registers

Description: writing register blocks of holding register type (block R/W limited to 8 registers).

- *Function code: 16*

Modbus Function 16 Transaction Table			
Query		***Response***	
Field	***Hex Byte***	***Field***	***Hex Byte***
Slave address	01	Slave address	01
Function	16	Function	16
Address Hi	00	Address Hi	02
Address Lo	0C	Address Lo	0C
Force data Hi	00	Force data Hi	00
Force data Lo	09	Force data Lo	09
CRC Lo	48	CRC Lo	49
CRC Hi	0C	CRC Hi	B4

Memory Map

SR55 Modbus communication is based on reading or writing equipment parameters from or to the holding registers. The data addressing is zero offset, such that the parameter Modbus address corresponds to the register number.

Modbus Address Memory Map		
Parameter Modbus Address	***Modbus Data Address***	
	Decimal	***Hexadecimal***
0000	0	0000h
0001	1	0001h
⋮	⋮	⋮
0128	128	0080h
⋮	⋮	⋮

Message Timing

In the RTU mode there is no specific start or stop byte that marks the beginning or the end of a message. Indication of when a new message begins or when it ends is achieved by the absence of data transmission for a minimum period of 3.5 times the transmission time of a data byte. Thus, in case a message is transmitted after this minimum time has elapsed; the network elements will assume that the first received character represents the beginning of a new message.

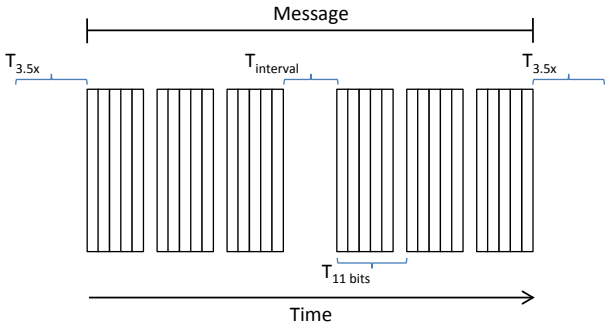

Network Communications – EtherNet/IP and Modbus TCP

Communication Module Overview

Three communication modules are available which allow network communication and control for the SR55 soft starter.

- *SR55-CM-ENETIP2 for EtherNet/IP network communication*
- *SR55-CM-ENETIP for EtherNet/IP network communication.*
- *SR55-CM-MODTCP for Modbus network communication.*

All modules have two RJ45 ports for daisy chaining to multiple starters. These ports act as a switch. It does not matter which port you connect to.

Install the applicable communication module in the SR55 option module slot per the hardware installation instructions in the "Accessories" chapter of this user manual.

Refer to the installation instructions in the "Accessories" chapter of this user manual before attempting to install the communication modules.

Module Installation – SR55-CM-ENETIP2, SR55-CM-ENETIP and SR55-CM-MODTCP

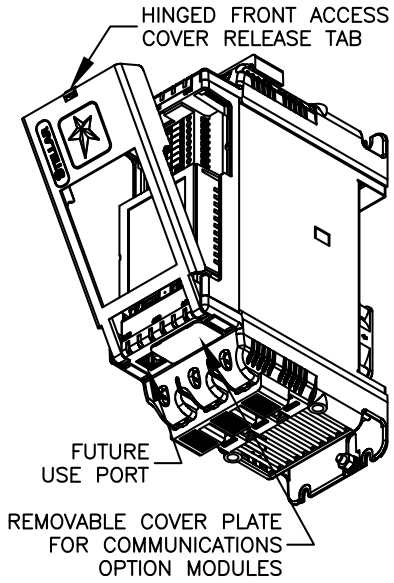

SR55-xxx Bottom View

Great care must be taken to properly seat the communication modules into the SR55 soft starter without damaging the connection pins. Refer to the detailed instructions in the "Accessories" chapter of this user manual.

SR55-CM-ENETIP2

SR55-CM-MODTCP

SR55-CM-ENETIP

SR55 Configuration

The SR55 will automatically configure when the option module is installed.

IP Address Configuration

Use the IP address configuration tool available from:
http://support.automationdirect.com/downloads.html

Network Communications – EtherNet/IP and Modbus TCP (continued)

Communication Module Front Panel Indicator Lights

Front Panel Indicators

Location of Front Panel Indicators

Item		*Front Panel Diagram*
1	Network Status LED	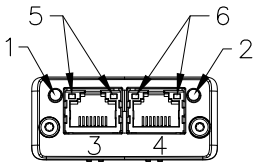
2	Module Status LED	
3	Network Interface, Port 1	
4	Network Interface, Port 2	
5	Link/Activity Port 1	
6	Link/Activity Port 2	

Network Interface LED

LED State	*Description*
Off	No link, no activity
Green	Link established (100 Mbit/s)
Green, flickering	Activity (100 Mbit/s)
Yellow	Link established (10 Mbit/s)
Yellow, flickering	Activity (10 Mbit/s)

Network Status LED

LED State	*Description*
Off	No power or no IP address
Green	Online, connections active
Green, flashing	Online, no connections active
Red	Duplicate IP, fatal error
Red, flashing	Connection timeout

Module Status LED

LED State	*Description*
Off	No power
Green	Controlled, Run state
Green, flashing	Not configured or idle state
Red	Major fault
Red, flashing	Recoverable error(s)

Modbus TCP Network Communications

The SR55-CM-MODTCP Modbus communication module offers the following functionality:

- *Dual switched RJ45 communication ports*
- *256 bytes of I/O data in each direction*
- *100 Mbps full duplex*
- *Supports 4 simultaneous (master) connections*

All Modbus functions and addresses that are available in the preceeding “Modbus Serial Communications” section of this chapter are also available via modus TCP.

SR55 uses Protocol Addressing (Base 0); not PLC Addressing (Base 1). If you are not using the correct selection, all the addresses will be off by 1. Recommended test: monitor a non-critical parameter such as Start Time (address 7104), then manually change the value on the touchscreen and verify that Modbus master actually sees the correct changes.

EtherNet/IP Network Communications

The SR55-CM-ENETIP2 EtherNet/IP communication module offers the following functionality:

- *CIP Parameter Object Support*
- *Implicit and Explicit messaging*
- *Dual switched RJ45 communication ports*
- *10/100 Mbps full duplex*
- *7 Input Words from the network master to the SR55*
- *5 Output Words from the SR55 to the network master*

The SR55-CM-ENETIP EtherNet/IP communication module offers the following functionality:

- *CIP Parameter Object Support*
- *Implicit and Explicit messaging*
- *Dual switched RJ45 communication ports*
- *10/100 Mbps full duplex*
- *2 Input Words from the network master to the SR55*
- *2 Output Words from the SR55 to the network master*

EtherNet/IP Control (SR55-CM-ENETIP2)

The interface is supported by the EDS file provided for the SR55-CM-ENETIP2 by HMS Industrial Networks.

The Class1/Implicit cyclic connection is facilitated through the 150 and 100 assemblies described in the EDS.

Connection 150 (0x96), O->T, requires the controlling system/PLC to supply seven words of data which dynamically configure the function of the host SR55 starter, as well as select any required data to return through T->O as it is connected.

In the simplest control mode, the first 16-bit word (1) can be used to enable or disable the control bits described below. See Table 1 to describe each bit's function. To make bits 0 to 3 visible to the SR55 starter, bit-4(Network Control) must be set.

The next two words (2,3) allow the PLC to set discreet values into selected parameters. Word 2 is used to select the parameter that is to be written to and word-3 carries the value to be assigned to that parameter(1). Note that word 3 is a 32-bit container and thus allows writing of values of up to 32 bits long. PNU's that require values less than 32 bits will ignore/truncate the more significant bytes passed into the word 3 during the assign process. If word-2 is set to zero, no data will be assigned. Note also that PLC output array will normally have to be specified as eight 16-bit words and the ladder logic will need to split a 32-bit data word in to what would be word-3 and word-4 of that working array. The entire O->T message size must be specified as 16 bytes long.

The last four 16-bit words (4,5,6,7) allow the selection of what Parameter data will be returned in the T->O frame "Selected Parameter n Value" described in Table 2. Each address set to zero will cause the return value of 0.

EtherNet/IP Network Communications (continued)

Table 1: Connection 150 O->T message frame			
WORD	**BITs**	**Value**	**Note**
1	16	Control Word	Bit 0: Start/Stop Bit 1: Freeze Ramp Bit 2: Reset Bit 3: External Trip Bit 4: Network Control Bit 5-15 Reserved
2	16	Write Select PNU Address	Address where word 3's value is assigned to. If zero/ null there is no copy assignment.
3	32	Write Value	Value written to the Write Select PNU (assigned in word 2, above). If the PNU expects a 16-bit value, then only Least Significant 16bits are copied.
4	16	Read Select PNU 1 Address	Selects the first datum copied to connection 100
5	16	Read Select PNU 2 Address	Selects the second datum is copied to connection 100
6	16	Read Select PNU 3 Address	Selects the third datum is copied to connection 100
7	16	Read Select PNU 4 Address	Selects the fourth datum is copied to connection 100

In response Connection 100 (0x64), T->O, delivers five 32-bit words contain the status and requested parameter data. Word 1 carries the status and any fault code. Table 2, describes the meaning of each of the 6bits making up the status report. If bit-1 (Trip) is set then the upper 16-bits of the status word will contain the trip code that describes the fault. See the main SR55-synergyTM manual for lists of Trip codes. The remaining four words will contain any parameter values corresponding to the selected parameter addresses specified in the last four words of Connection 150.

Table 2: Connection 100 T->O message frame			
WORD	**BITs**	**Value**	**Note**
1	32	Status	Status value defined as: Bit 0: Error/Fault/Trip bit 1: Running Bit 2: Ramping Up Bit 3: End Of Start Bit 4: Current Limited Bit 5: iERS Active Bit 6: Stopping Bit 7: Network Control Active Bit 8-15: Reserved Bits 16-31 Trip Code
2	32	Selected PNU 1 Value	If a value is less than 32 bits it will be assigned to the least significant part. If larger then 32 bits it will be truncated to its 32 bit least significant part.
3	32	Selected PNU 2 Value	..as above
4	32	Selected PNU 3 Value	
5	32	Selected PNU 4 Value	

EtherNet/IP Network Communications (continued)

Class 3 Explicit packets

All the datum described in the class 1 section can be addressed individually as explicit/class 3 messages using the following CIP addressing.

Table 3: Explicit packets					
Name	**Read Only**	**Bytes**	**Class Hex**	**Instance Hex**	**Attribute Hex**
Control Word		2	A2	2	5
Status	Yes	4	A2	3	5
Write Select PNU Address		2	A2	100	5
Write Value		4	A2	101	5
Read Select PNU 1 Address		2	A2	102	5
Read Select PNU 2 Address		2	A2	103	5
Read Select PNU 3 Address		2	A2	104	5
Read Select PNU 4 Address		2	A2	105	5
Selected PNU 1 Value	Yes	4	A2	106	5
Selected PNU 2 Value	Yes	4	A2	107	5
Selected PNU 3 Value	Yes	4	A2	108	5
Selected PNU 4 Value	Yes	4	A2	109	5

EtherNet/IP Network Communications (continued)

EtherNet/IP Control (SR55-CM-ENETIP/SR55-CM-ENETIP2)

Supported Parameters			
#	**Description**	**Read Only?**	**Implemented?**
1	Run Forward	N	Y
2	Run Reverse	N	N
3	Fault Reset	N	Y
4	Net Control	N	Y
5	Net Reference	N	N
6	Speed Reference	N	N
7	Torque Reference	N	N
8	Faulted	Y	Y
9	Warning	Y	Y
10	Running Forward	Y	Y
11	Running Reverse	Y	N
12	Ready	Y	Y
13	Ctrl From Net	Y	Y
14	Ref From Net	Y	N
15	At Reference	Y	N
16	Drive State	Y	Y

The drive profile used by the interface is currently that provided by the SR55-CM-ENETIP2 Module and is dictated by the EDS file.

The EDS describes parameters that can be accessed explicitly in an Acyclic manner. Not all of these parameters are implemented in the SR55 soft starter. See the following table. CIP paths from these parameters are described in the EDS.

The EDS also describes the 25 Implicit Cyclic connections, each of which will set and/or get a combination of the above parameters. The following examples are for connection 6 (Extended Control).

CIP Packet functionality – Extended Control								
O -> T Packet (Control)	***Bit 7***	***Bit 6***	***Bit 5***	***Bit 4***	***Bit 3***	***Bit 2***	***Bit 1***	***Bit 0***
Byte 0	–	–	#4	–	–	#3	–	#1
Byte 1	–	–	–	–	–	–	–	–
T -> O Packet (Status)	***Bit 7***	***Bit 6***	***Bit 5***	***Bit 4***	***Bit 3***	***Bit 2***	***Bit 1***	***Bit 0***
Byte 0	–	–	#13	#12	–	#10	#9	#8
Byte 1	#16							
Note: When a cyclic connection is established and Bit4 (Net Control) is set, the network has control of the SR55 soft starter and any other control from the SR55 front touchscreen, switches, or Modbus interface will be overridden.								

EDS File

EDS files for the SR55-CM-ENETIP and SR55-CM-ENETIP2 are available on the item pages of the AutomationDirect website:

https://www.automationdirect.com

EtherNet/IP Network Communications (continued)

Using the IP Configuration Tool (IPconfig)

The IP address of the SR55 is set using the Anybus IPconfig utility available from: http://support.automationdirect.com/downloads.html.

This section explains how to install the IPconfig utility and how to set the SR55's IP address.

Unzip the file to a temporary folder and run the executable.

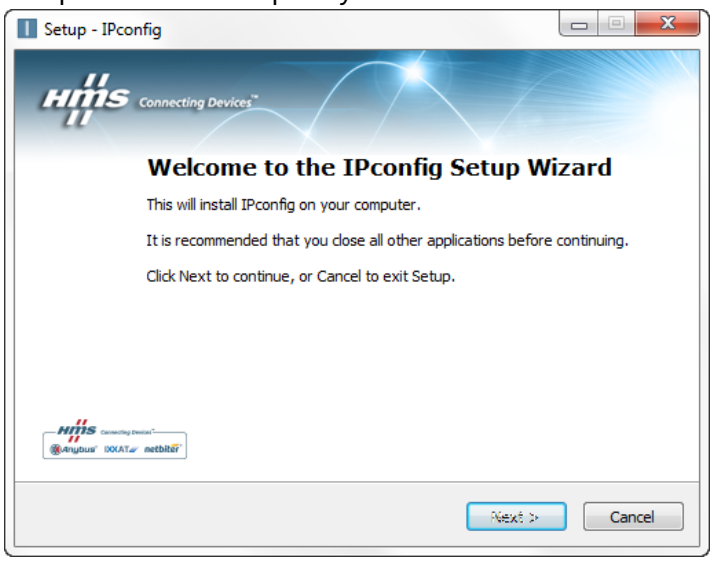

Follow the steps through the installation.

Once the installation is complete, run application from the folder that it was installed to (usually the HMS folder in the Start menu). In Windows 8, from the home tile screen, simply type in "ipconfig." Typing any text on this screen will open the Search dialog. The program IPconfig is the configuration tool from HMS.

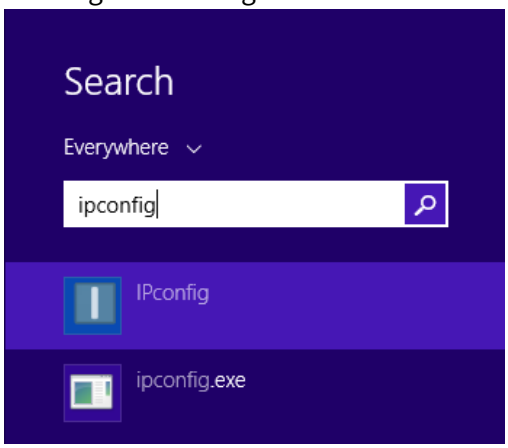

If you use the Desktop most of the time in Windows, right click on this file and select "Pin to Taskbar" to always have quick access to the file from the desktop.

The SR55 with the installed SR55-CM-ENETIP module needs to be installed on the same network as the PC running the Ipconfig application.

The messaging uses broadcast and will not go through routers.

It is highly recommended to disconnect the PC from any network and have only the SR55 and the PC connected via an Ethernet switch (not a router) or an Ethernet cross-over cable.

EtherNet/IP Network Communications (continued)

Use a switch or crossover cable to connect the starter to the SR55.

Start the Ipconfig software. Press the Scan button to have the PC scan for an SR55. The IPconfig utility will automatically find the SR55 units on the network.

If the SR55 is not found, click on the Settings button, then choose "Broadcast from a specific Network Interface Controller." This could be required if there are multiple network cards on the PC. Click OK, then Scan for SR55 units again.

Below shows a screen capture of an SR55-077 and an SR55-242 daisy chained from one to another.

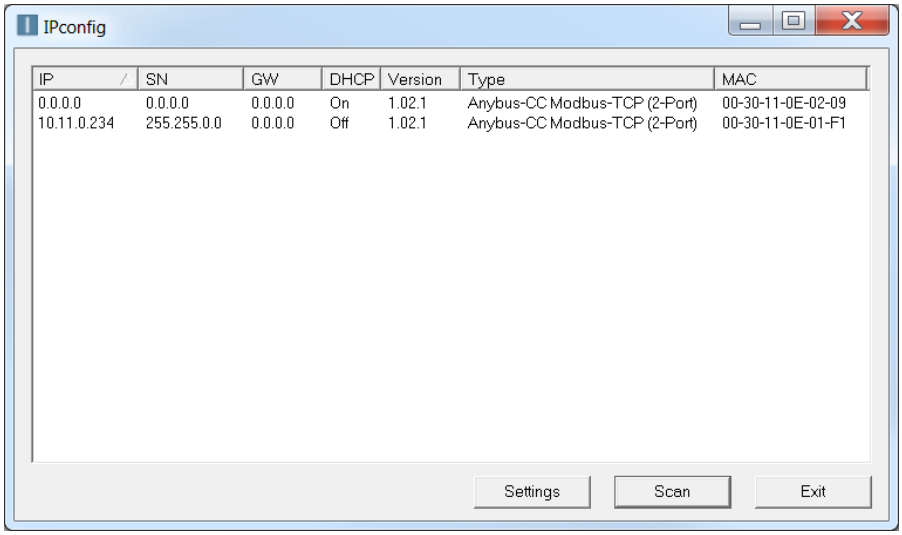

Select the Anybus module in the window and double click on it. This will bring up a window to set the network settings to values appropriate to the network that it will be running on.

It is very highly recommended to set DHCP to OFF. Otherwise, the Ethernet address of the SR55 could be changed by a DHCP server at a future time. Setting DHCP to OFF will ensure that the SR55 maintains the same IP address.

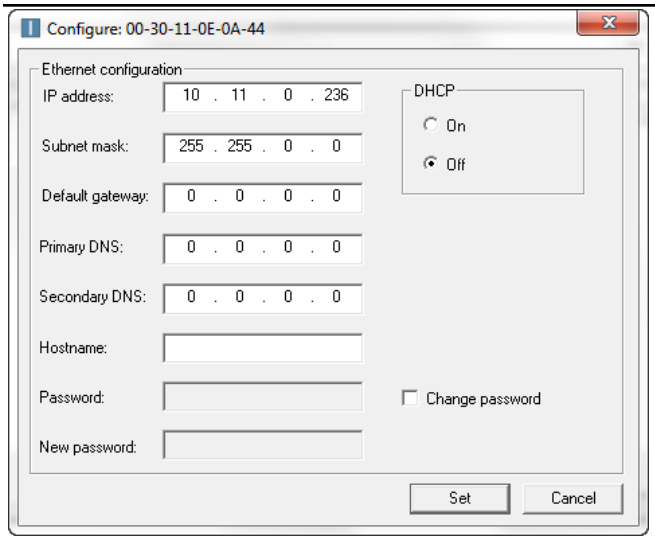

EtherNet/IP Network Communications (continued)

Once the settings have been entered, click on the "Set" button and the Anybus module is now configured and ready to be used. It is not recommended to use DHCP, as the address could be changed. The starter's control power will have to be cycled for the correct settings to show up on the touchscreen.

Troubleshooting

If you do not see modules showing up in the IPconfig screen check the following:

- *That the SR55-MODTCP or SR55-ENETIP(2) module is inserted correctly, and MS LED is on or flashing green. See module installation instructions in this SR55 user manual.*
- *That the module appears in the Networks menu under Home >> Device >> Networks. If the module is not recognized the center selection text will read "Anybus" instead of "ModbusTCP or "Ethernet IP."*
- *On the PC, run "cmd" from the Start Menu (or type "cmd" from the Windows 8 Home tile screen) to get a command prompt. Test the physical connection between the PC and the starter. Type "ping" and the address the SR55 should be set to. Press Enter.*
- *If the PC can see the starter, valid data will be returned:*

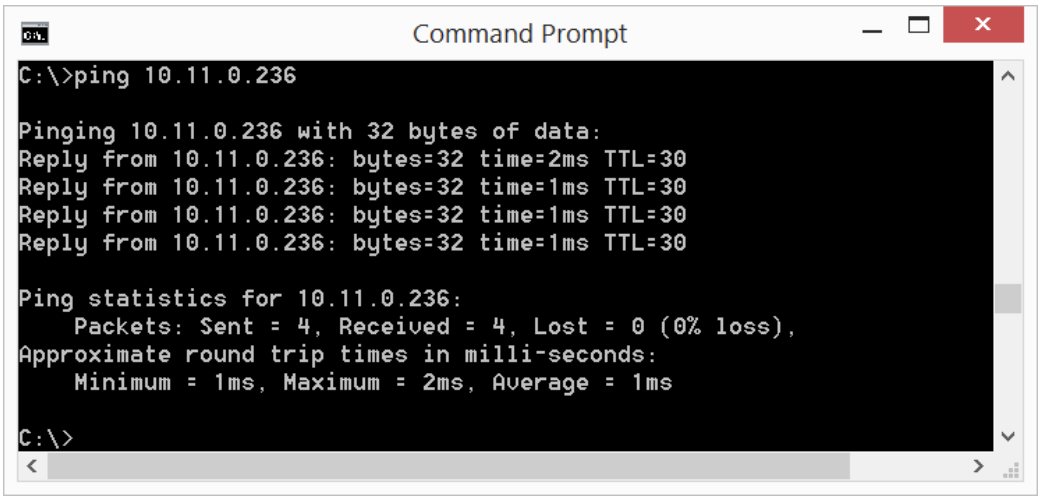

EtherNet/IP Network Communications (continued)

- *If the PC is set to a different IPv4 network than the SR55, ie., both PC and SR55 are not set to the same first two octets (10.11.xxx.xxx in this example), the following error will be returned:*

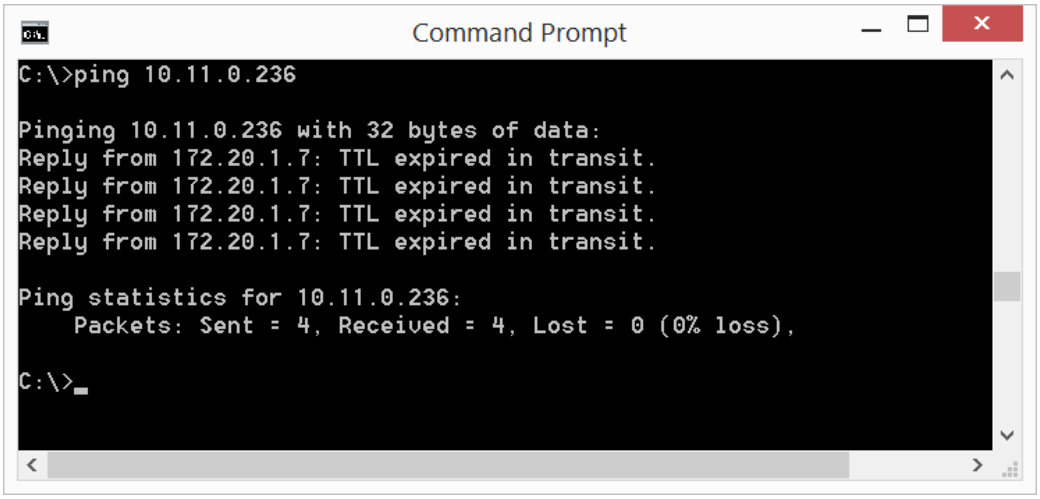

- *If the IPv4 Ethernet address is incorrect, the following error will be returned (notice that unlike the previous error, this error returns "Destination host unreachable"):*

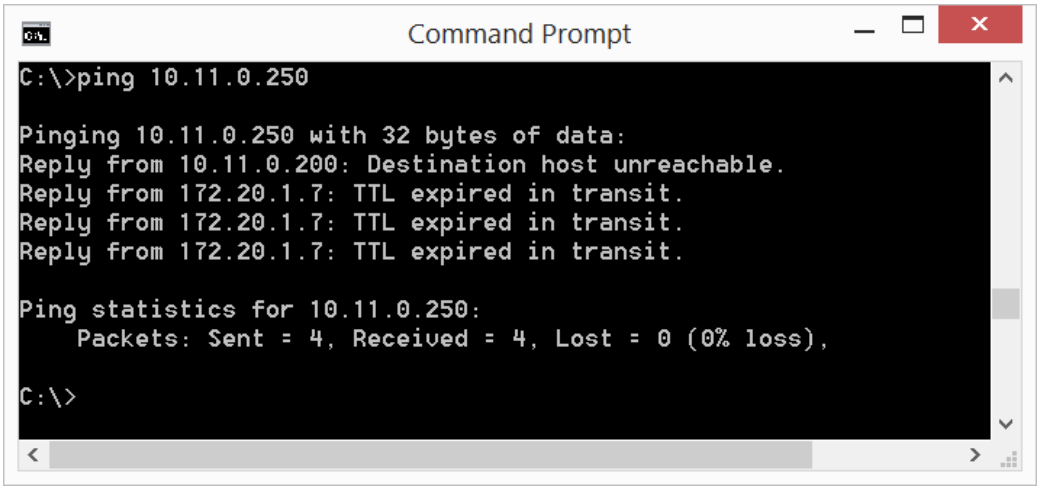

- *If Ping from the PC to the SR55 does not work, please recheck that a cross-over cable or an Ethernet switch (NOT a router) is being used to connect the PC to the SR55.*
- *Also check that the header pins between the comm module and the SR55 were not bent (extreme care must be taken when inserting the module into the starter).*

EtherNet/IP Network Communications (continued)

Connecting to the SR55-CM-ENETIP2 Module through I/O (Implicit Messaging)

The example below is taken from a commercially available PLC interface and should be transferable, with the appropriate changes, to others. EIP Client Properties Tag names are just specified for this example. The IP Address would be changed to suit.

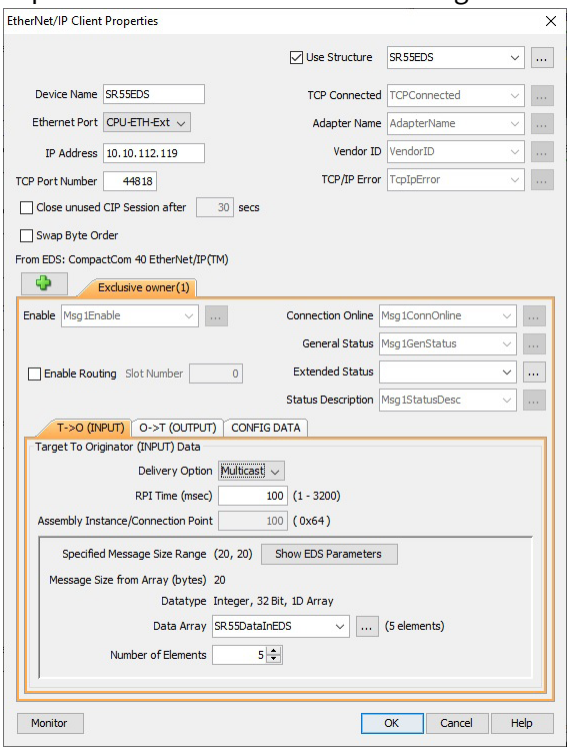

T->O setting reflect Table 2 contents.

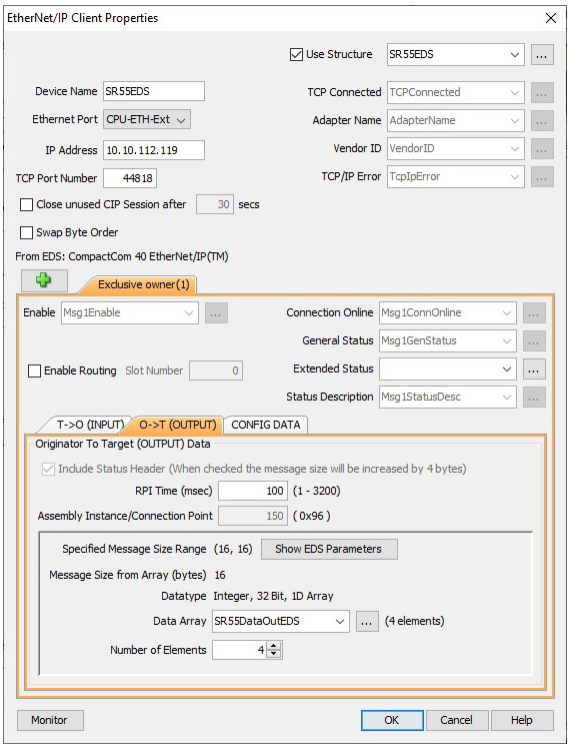

O->T settings reflect Table 1 contents. Note that this is specified as an array of 16 bit integer.

EtherNet/IP Network Communications (continued)

There is no configuration data required, but the HMS module requires that it is enabled with zero content as shown here.

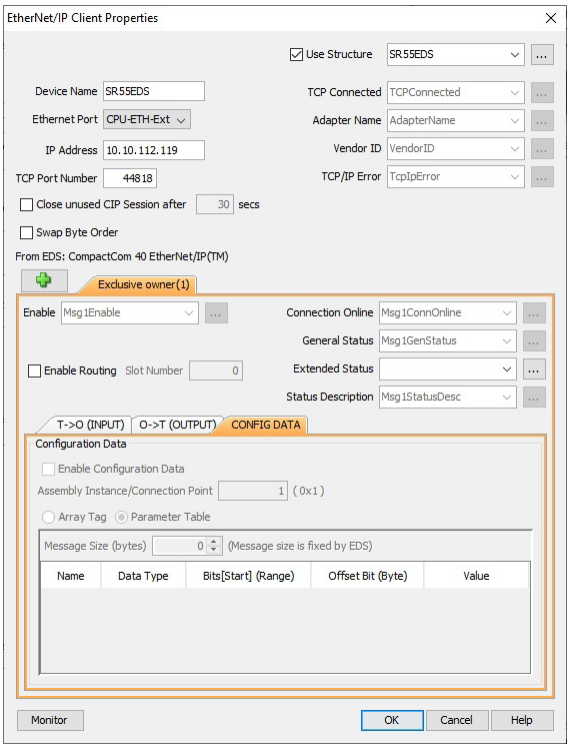

Ladder logic will need to be written which can load the required control bits into SGYDataIn(1). The example below is using a bank of switches, each of which are assigned to a Boolean which in-tern are packed into the first word of the O->T frame defined above.

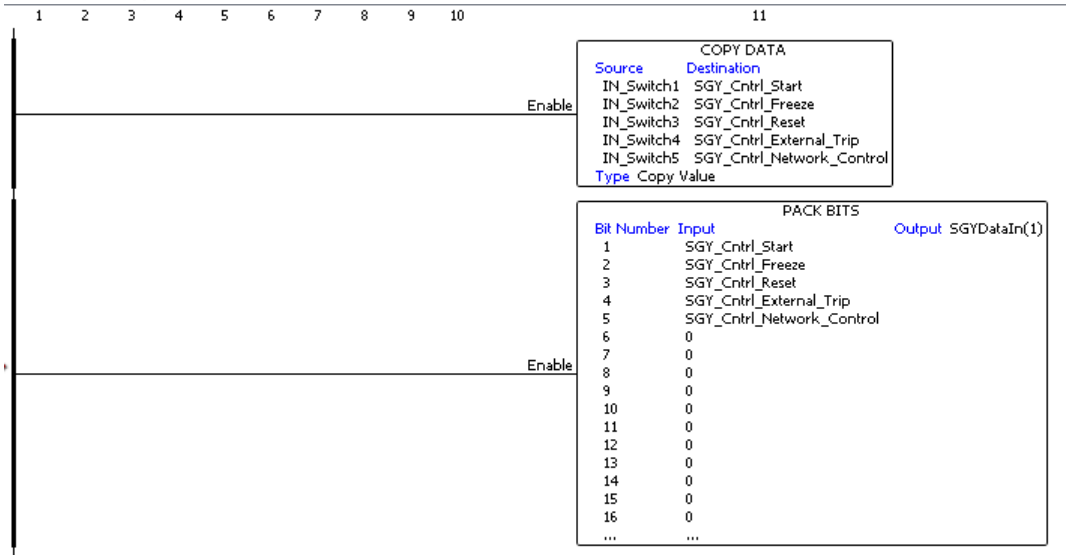

The remainder of the O->T frame will need to be populated as show below. Note the unpacking of the 32bit values into the two successive 16bit array members.

EtherNet/IP Network Communications (continued)

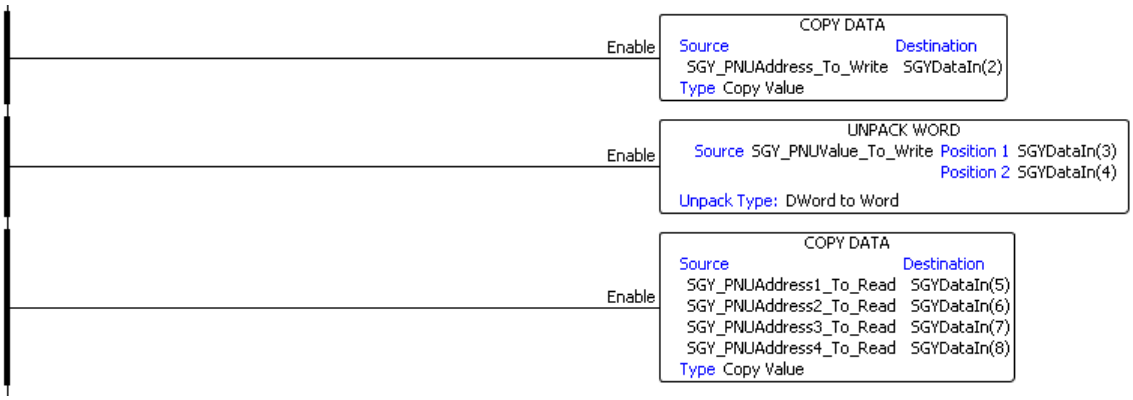

The T->O frames members can be copied piece wise with the status word being stripped out. The following example shows this with the added functionality creating a description string of the status for MMI use.

EtherNet/IP Network Communications (continued)

Connecting to the SR55-CM-ENETIP Module through I/O (Implicit Messaging)

The connection parameters for Connection 6 (Extended Control) are as follows:

- *T->O (Input Data) Connection Point Assembly Instance value is 71.*
- *T->O (Input Data) Size is 4 bytes.*
- *The Data format for Status is shown in the "Input Data Setup" screen capture.*
- *O->T (Output Data) Connection Point Assembly Instance value is 21.*
- *O->T (Output Data) Size is 4 bytes.*
- *The Data format for Control is shown in the "Output Data Setup" screen capture.*
- *No Configuration data is required.*

To start the SR55, a value of 33 should be placed into Byte 0 of the Control data.
33 equates to Bit 0 (Run Forward) On and Bit 5 (Net Control) On.

To stop the SR55, a value of 32 should be placed into Byte 0 of the Control data.
32 equates to Bit 0 Off and Bit 5 On.

To reset faults on the SR55, a value of 36 should be placed into Byte 0 of the Control data.
36 equates to Bit 2 (Fault Reset) On and Bit 5 (Net Control) On.

The following images are an example setup of I/O (Implicit Messaging) to the SR55 EtherNet/IP adapter from a Productivity Series CPU.

Input Data Setup

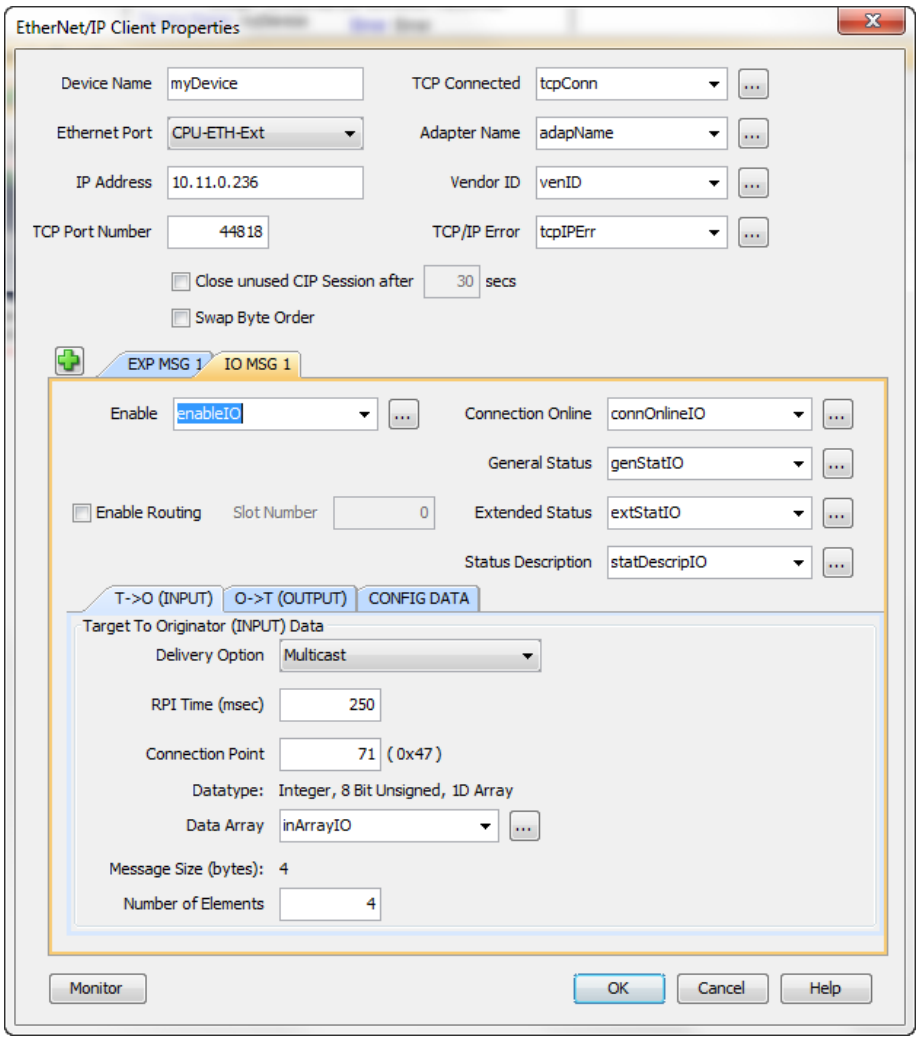

EtherNet/IP Network Communications (continued)

Output Data Setup

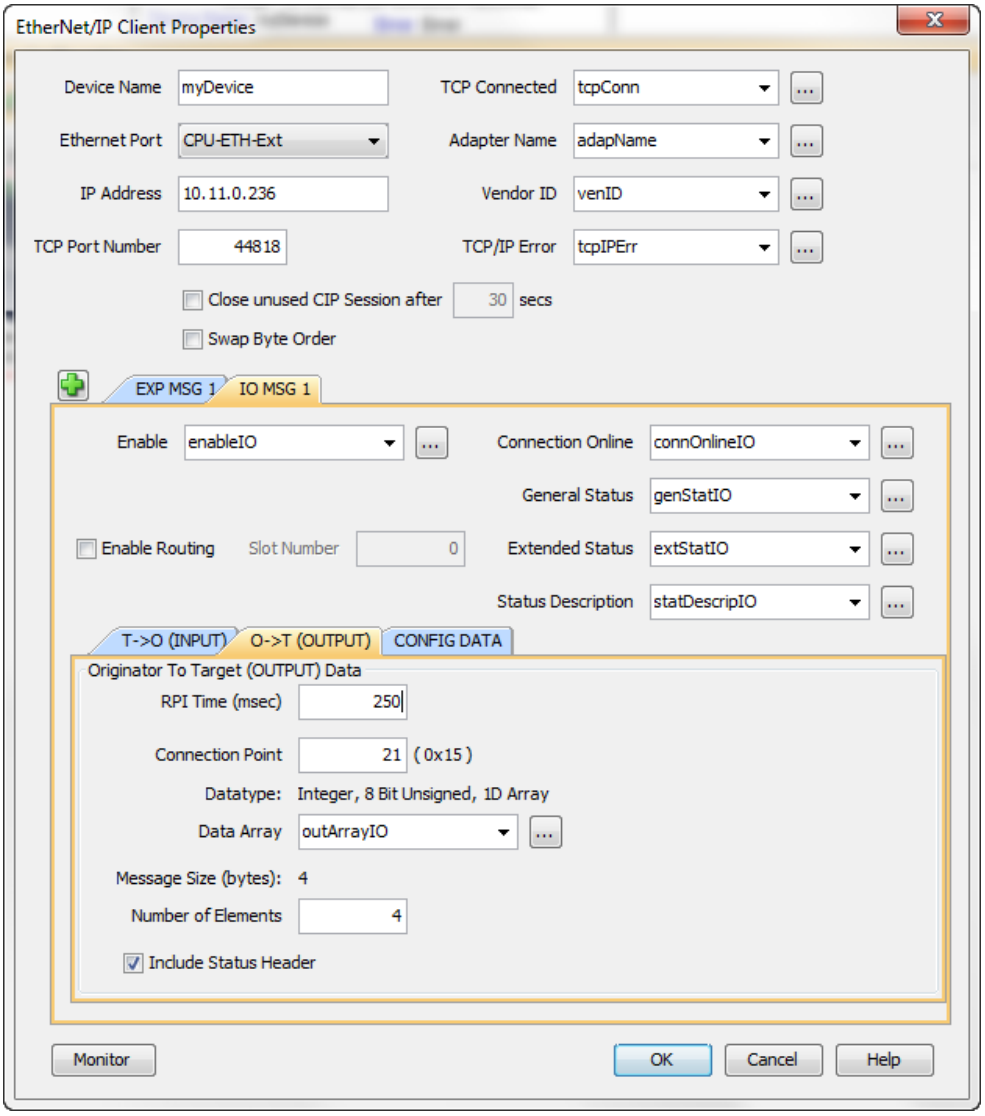

EtherNet/IP Network Communications (continued)

Config Data Setup (No Config Data)

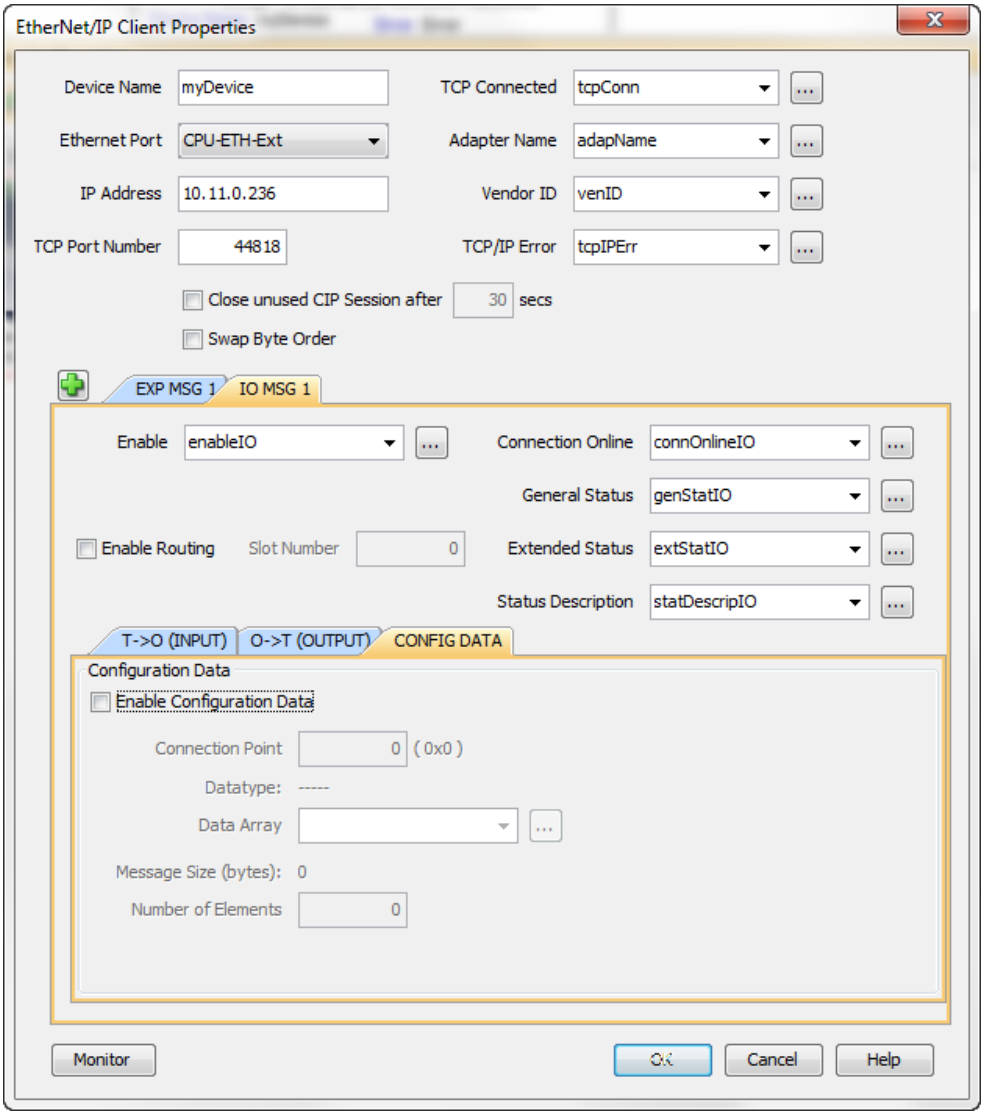

EtherNet/IP Network Communications (continued)

Connecting to the SR55-CM-ENET Module through Explicit Message:

There are a few different objects that can be read or be written to via Explicit Messaging:

Objects Supported By Explicit Messaging					
Description	***Read Only?***	***Service***	***Class***	***Instance***	***Attribute***
Run	No	16 (0x10)	41 (0x29)	1	3
Fault Reset	No	16 (0x10)	41 (0x29)	1	12 (0x0c)
Network Control	No	16 (0x10)	41 (0x29)	1	5
Faulted	Yes	14 (0x0e)	41 (0x29)	1	10 (0x0a)
Warning	Yes	14 (0x0e)	41 (0x29)	1	11 (0x0b)
Running Forward	Yes	14 (0x0e)	41 (0x29)	1	7
Ready	Yes	14 (0x0e)	41 (0x29)	1	9
Control from Network	Yes	14 (0x0e)	41 (0x29)	1	15 (0x0f)
Drive State	Yes	14 (0x0e)	41 (0x29)	1	6

With the exception of the “Drive State” parameter, all of the other parameters either require a value of 1 or 0 for SET (16), and will return a value of 0 or 1 on the GET (14) parameters.

To run the starter, a value of 1 must be set in the “Network Control” parameter first and then a value of 1 can be sent to the “Run” parameter to start the motor and a value of 0 to the same parameter to stop the motor.

If the Communications Trip parameter is enabled, a message must be sent to the starter at a faster rate than what is configured for the Timeout parameter. It is typical in this situation to poll the “Faulted” parameter to view the state of the starter along with keeping the Communications Trip from enabling and stopping the motor.

If communications are interrupted for a long enough period to invoke the Communications Trip fault, the following sequence is required to restart the motor:

- *Send a 0 to the “Run” parameter.*
- *Send a 1 to the “Fault Reset” parameter.*
- *Send a 0 to the “Fault Reset” parameter.*
- *Now you can restart the motor by sending a 1 to the “Run” parameter.*

EtherNet/IP Network Communications (continued)

Explicit Message Instruction Examples (from Productivity Series CPU)

Example instruction for setting the starter to Network Control (Productivity CPU)

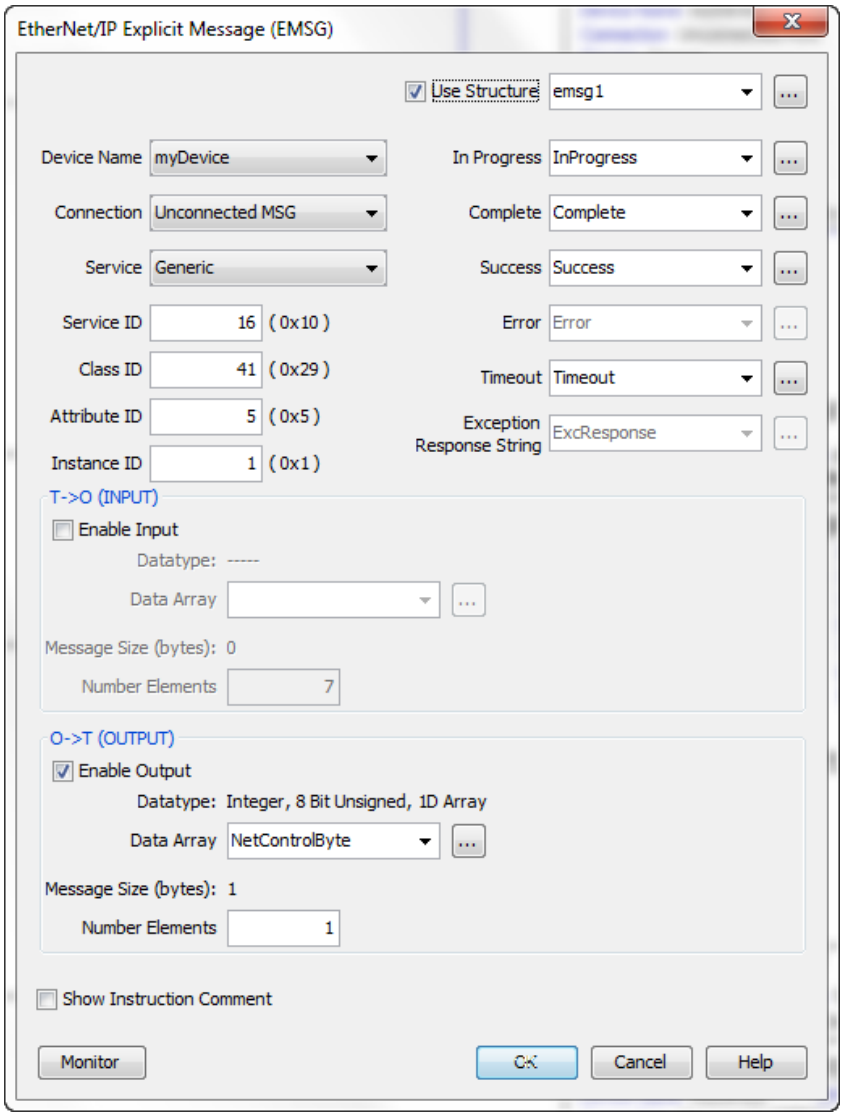

EtherNet/IP Network Communications (continued)

Example instruction for controlling the Start and Stop of the Motor (Productivity CPU)

(value of 1 to start and 0 to stop)

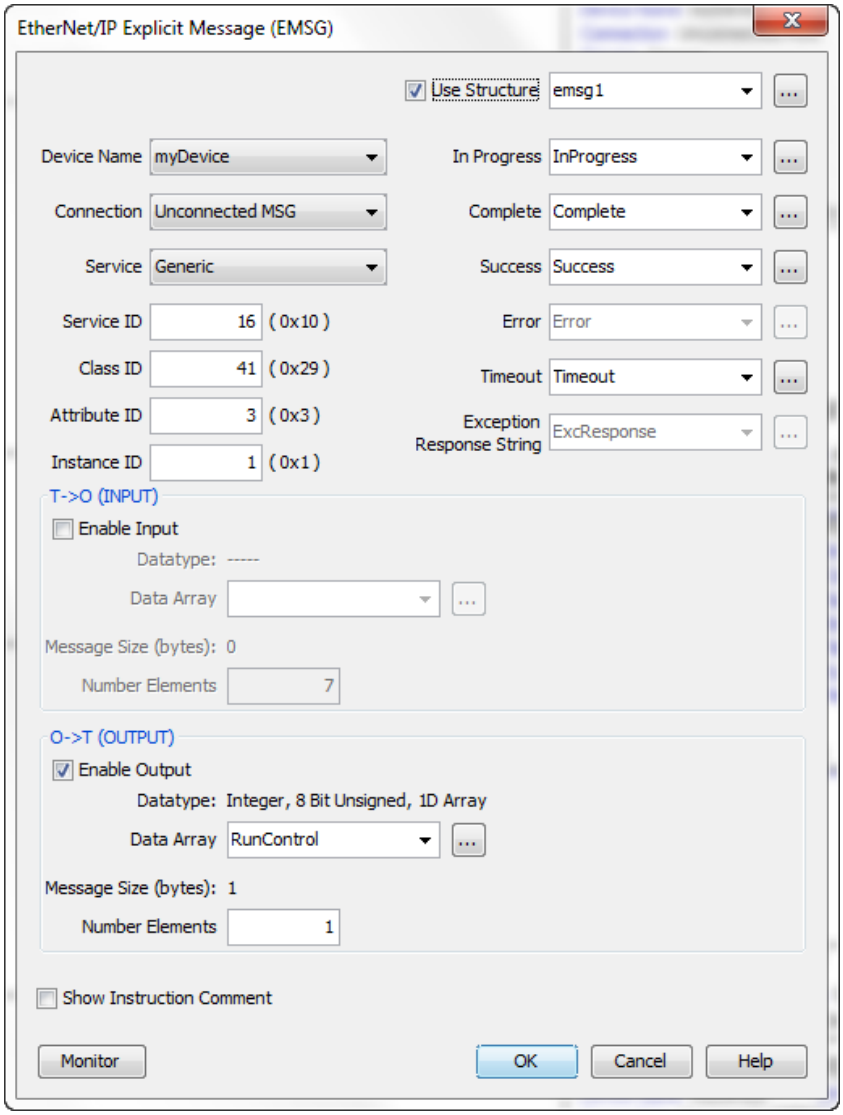

EtherNet/IP Network Communications (continued)

Example instruction for reading back the Fault status of the Starter (Productivity CPU)

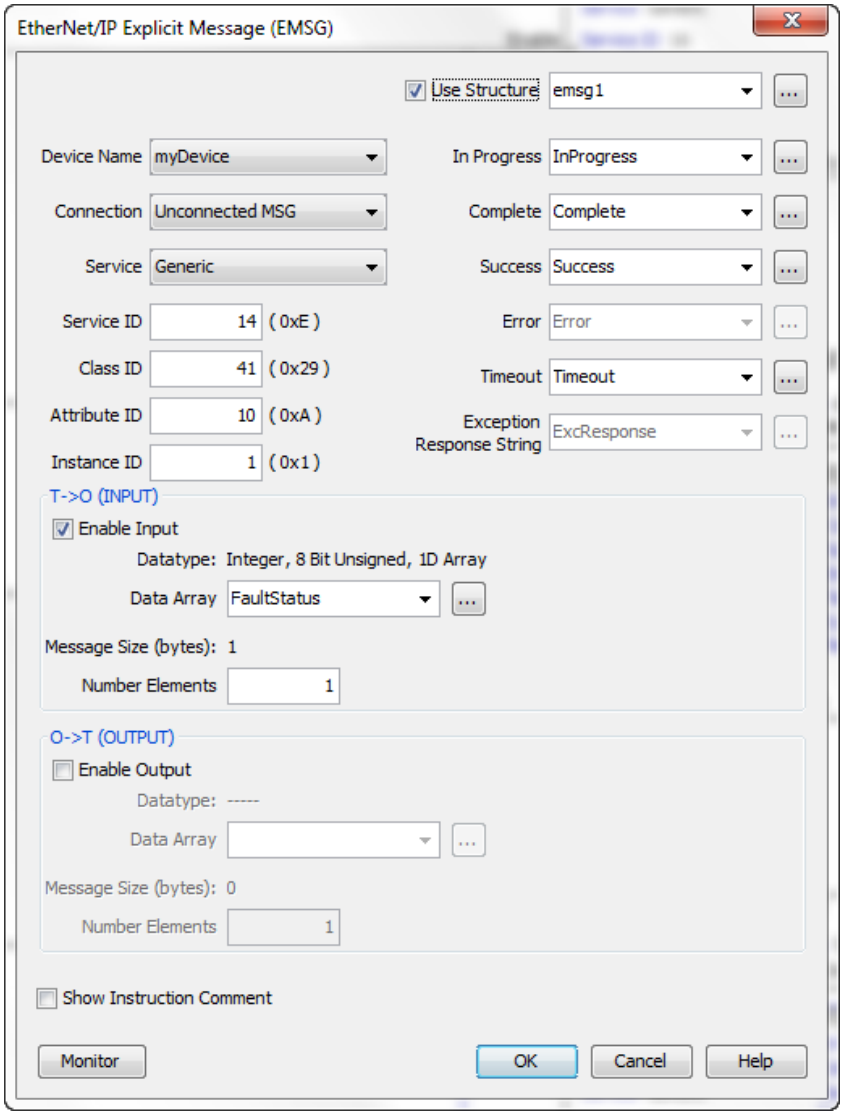

EtherNet/IP Network Communications (continued)

Example instruction to reset any faults on the Starter (Productivity CPU)

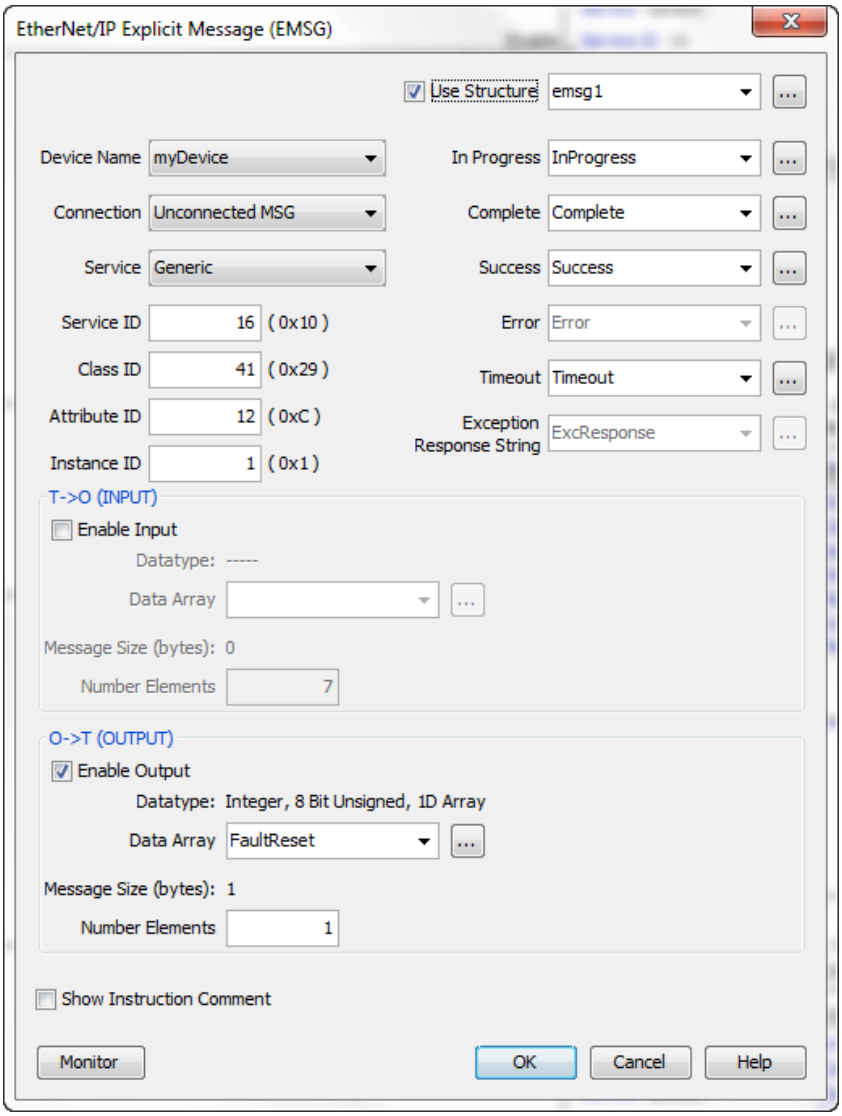

Drive State	
Byte Value	***State Description***
1	Startup
2	Ready & Stopped
4	Running
5	Stopping
6	Fault Stop
7	Faulted

BLANK
PAGE

Chapter 6: Accessories

Chapter 6

Table of Contents

Chapter 6: Accessories 6–1
Optional Accessories 6–2
Finger Guards 6–2
Remote Touchscreen 6–3
RJ45 to RJ12 Adapter 6–5
Serial Modbus Communication Splitter 6–5
Communication Modules 6–7
Replacement/Spare Parts 6–10
Replacement Cooling Fans 6–10
Replacement Touchscreen 6–16

Optional Accessories

SR55 Optional Accessories		
Part Number	***Description***	***For SR555 Models***
SR55-CM-ENETIP	EtherNet/IP communication module, optional, for Stellar SR55 series soft starters, dual RJ45 communication ports, complete EtherNet/IP adapter, TCP/IP socket interface, CIP parameter object support, explicit and implicit messaging (2 input words, 2 output words), transformer isolated Ethernet interface, 10/100 Mbps full duplex.	all
SR55-CM-MODTCP	Modbus TCP communication module, optional, for Stellar SR55 series soft starters, dual RJ45 communication ports, complete Modbus TCP server, up to 256 bytes of I/O data in each direction, transformer isolated interface, 100 Mbps full duplex, TCP/IP socket interface, capable of supporting 4 simultaneous (master) connections.	all
SR55-FG-1	Finger guards, optional, for size 1 Stellar SR55 series soft starter power terminals. Provides IP20 protection rating. Package of 2.	-017 thru -096
SR55-FG-2	Finger guards, optional, for size 2 Stellar SR55 series soft starter power terminals, Provides IP20 protection rating. Package of 2.	-124 thru -180
SR55-KPD-REM	Touchscreen, optional remote, for Stellar SR55 series soft starters. Used to remotely monitor, configure, and control SR55 series units without opening enclosures. Rated for IP55 enclosures, no external power wiring required. Includes 3m (9.8 ft.) Cat5e cable and SR55-RJ45-RJ12 adapter.	all
SR55-SPLT	Serial Modbus communication splitter, optional, for Stellar SR55 series soft starters. Used for creating a Modbus network with multiple SR55 series soft starters. Uses 3 serial RJ45 connectors for upstream/downstream connectivity and for connection to the starter. Includes 3m (9.8 ft.) Cat5e cable and SR55-RJ45-RJ12 adapter.	all
SR55-RJ45-RJ12	RJ45 female to RJ12 male adapter, optional, for Stellar SR55 series soft starters.	all

Finger Guards

SR55-FG-1

SR55-FG-2

Install these optional finger guards on the power-circuit line and load side power terminals to provide IP20 protection for soft starter sizes SR55-180 and below (frame sizes 1 and 2).

The addition of optional finger guards to size 1 and size 2 SR55 soft starters adds approximately 14mm [0.5in] to the vertical dimension, but does NOT change the clearance distance.

Remote Touchscreen

SR55-KPD-REM

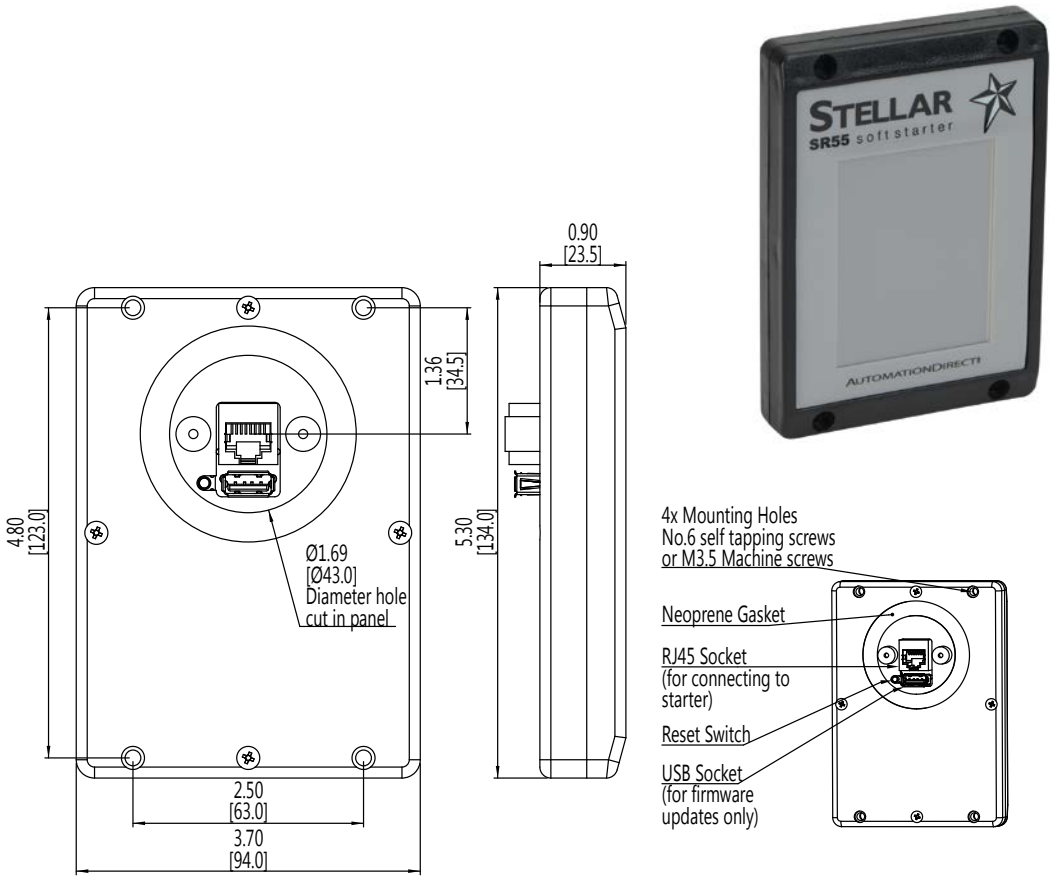

The optional remote touchscreen allows remote monitoring, configuration, and control of SR55 soft starters. Since the touchscreen is a master RS-485 device, it can control multiple SR55 soft starters. Includes a 3m (9.8ft) Cat5e cable and an SR55-RJ45-RJ12 adapter cable.

How to connect and use remote touchscreen

The SR55-REM-KPD Remote Keypad is a Modbus master. If the Remote Keypad is connected to an SR55, that starter will not be able to communicate with a PLC or other 3rd party Modbus master (only one master is allowed on a Modbus network). For similar reasons, the Remote Keypad also cannot be used with the Modbus TCP or Ethernet IP communication modules.

How to connect the remote touchscreen

- *Ensure starter's Modbus Network Settings are: Even parity and 19200 baud rate. If connecting to multiple starters, set the Address to a unique number for each SR55 starter.*
  - *If remote touchscreen start/stop control is desired, set the Control Method to Modbus Control. If the remote touchscreen will only be used for monitoring or configuration (digital input or local touchscreen start/stop control will be used), select the appropriate setting (Local Touchscreen, User Programmable, 2-wire control, or 3-wire control).*
- *Connect remote touchscreen using the SR55-RJ45-RJ12 adapter and a standard Ethernet patch cable. If connecting to multiple starters, a Modbus splitter (SR55-SPLT) will be required for each starter.*
- *On the remote touchscreen go to Modbus Network Settings as shown in Fig 1. and select Scan Bus. This will show all the SR55 starters on the bus Fig 2. Select which starter you wish to connect to.*
  - *Alternatively you can select the Address number and then select Connect to connect to that particular starter.*
- *The status screen Fig 3 on the remote touchscreen will display the current starter it is connected to by displaying the starter's node address and serial number (EX: address 01 and serial number A0167805)*

Fig 1

Fig 2

Fig 3 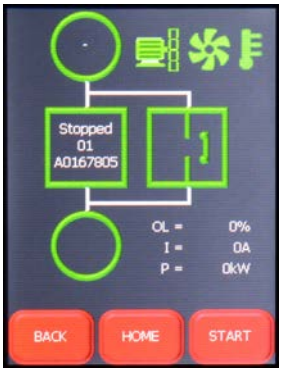

How to use the remote touchscreen

- *The remote touchscreen's control for starting and stopping overrides the starter's onboard touchscreen when the starter's Control Method is set to Modbus Control. Menu navigation, configuration, and monitoring are still possible on the starter's touchscreen.*
- *Press the starter icon box on the Status screen of the remote touchscreen to change to another starter if controlling multiple starters from one remote touchscreen.*
- *When using the remote touchscreen for start/stop control the remote touchscreen has full control, configuration, and monitoring capabilities, while the local touchscreen on the starter only has configuration and monitoring capabilities. Digital outputs always function as programmed, regardless of Control Mode. Digital inputs are disabled during Modbus Control and Keypad Control Modes, but are active during all other Control Modes.*
- *The remote touchscreen can be used for monitoring and configuration during any other control method besides Modbus Control.*

The remote touchscreen cannot be used with a communication module installed (SR55-CM-ENETIP or SR55-CM-MODTCP).

The remote touchscreen is a Modbus RTU master device. A PLC, HMI, or other Modbus Master device cannot be used on the same network while the remote touchscreen is connected.

RJ45 to RJ12 Adapter

SR55-RJ45-RJ12

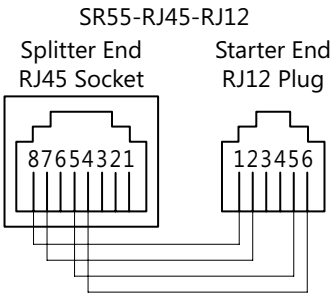

This adapter allows connection of the Remote Touchscreen, Modbus Splitter, or other Modbus master to the SR55 soft starter. The adapter plugs directly into the RJ12 port on top of the SR55, and provides a receptacle for a communication cable with an RJ45 connector.

Serial Modbus Communication Splitter

SR55-SPLT

With front cover on

With front cover off

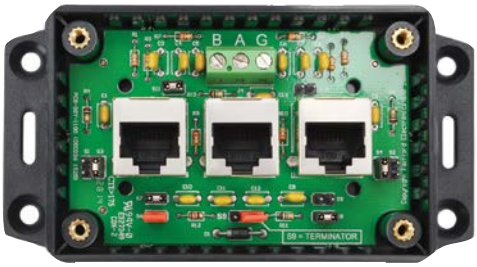

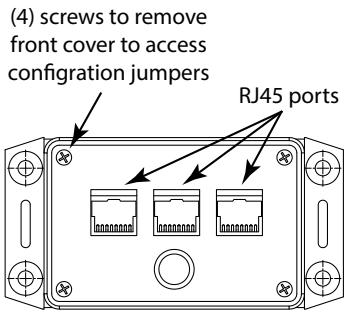

Pin-out same
for all 3 ports:

1 = n/c
2 = n/c
3 = n/c
4 = TXD1-B
5 = TXD0-A
6 = n/c
7 = 24VDC
8 = GND

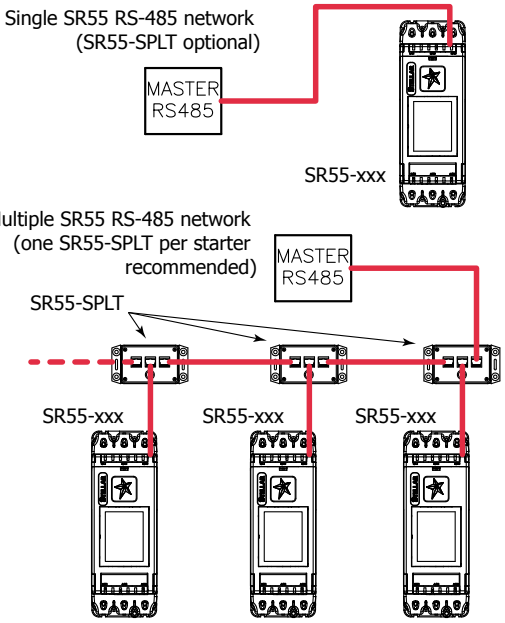

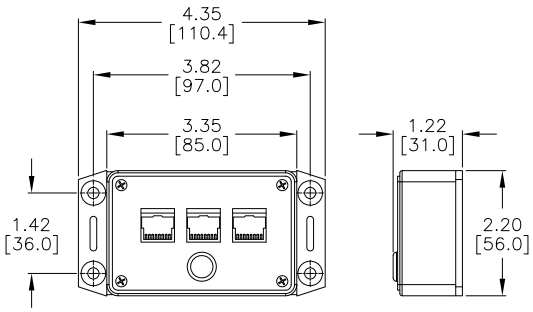

Dimensions = in [mm]

Serial Modbus Communication Splitter – Optional Accessories (continued)

The Modus splitter allows for multiple SR55 soft starters to be connected to a Modbus RTU network over RS-485. The splitter allows for the interconnections to be made with standard RJ45 Ethernet patch cables from splitter to splitter. The splitter can then be connected to the starter's RJ12 port with a standard Ethernet patch cable and an SR55-RJ45-RJ12 adapter (included). The maximum length the network can be is 4000 feet total and a maximum of 31 starters.

If the SR55-KPD-REM optional remote touchscreen is to be the master, then set each starter to a unique Modbus address (1-31). If another device such as a PLC is to be the master, then set each starter to a unique Modbus address (2-31).

All three RJ45 ports on the SR55-SPLT are not interchangeable as far as functionality. The differences are described below along with the BAG terminating strip (located inside the SR55-SPLT).

- *The RJ45 port on the right must go to the Modbus master (remote touchscreen or PLC). This is only for the first splitter on the network. For all other splitters on the network this port will be the connection point from the previous splitter.*
- *The middle RJ45 port connects to the starter using a standard RJ45 Ethernet patch cord and an SR55-RJ45-RJ12 adapter.*
- *The RJ45 port on the left connects to the next splitter on the network. If this is the last splitter on the network then leave this port unconnected.*
- *The three terminals B, A, and G inside the splitter are for wiring to a third party Modbus RTU slave device. These terminals are simply TDX00-A and TDX01-B signal lines + Ground. Use BAG term strip <u>or</u> the middle RJ45 connector; do <u>not</u> use both.*

Inside the splitter there are multiple jumpers that need to be configured before the splitter will function properly. Access these jumpers by removing the front cover, which is attached with four screws.

- *<u>Jumper S6</u>*
  For the first splitter on the network, jumper S6 inside the box must be connected if using the SR55-KPD-REM. Jumper S6 provides 24VDC to the touchscreen for power. Do not connect jumper S6 if using a different master as this could damage the master. Do not connect S6 for all other splitters on the network, only the first one.
- *<u>Jumper S9</u>*
  Connect jumper S9 on the last splitter on the network. This puts in a 120 Ohm terminating resistor.
- *No other jumper needs to be configured and should not be reconfigured. For reference, the <u>default settings</u> for the remaining jumpers are:*
  S1 = open
  S2 = open
  S3 = closed
  S4 = closed
  S5 = closed
  S7 = closed
  S8 = open
  S10 = open
  S11 = closed

All three RJ45 ports have the same pin layout. (Pins 1, 2, 3, and 6 are not used.)

- *Pin 4: TXD1-A*
- *Pin 5: TXD0B*
- *Pin 7: 24VDC (when jumper S6 is connected)*
- *Pin 8: GND*

Communication Modules

SR55-CM-ENETIP
EtherNet/IP Communication Module

SR55-CM-MODTCP
Modbus TCP Communication Module

EtherNet/IP Communication Module

The EtherNet/IP interface is intended to be installed in the SR55 option slot, and allows the SR55 to be connected to an EtherNet/IP network. The interface offers the following functionality:

- *CIP Parameter Object Support*
- *2 Input Words from the network master to SR55*
- *2 Output Words from SR55 to the network master*

Refer to “Configuration and Parameters” Chapter 3 and “Communications” Chapter 5 of this user manual for detailed parameter and EtherNet/IP network communications information.

Refer to the installation instructions in the following section. Great care must be taken when inserting the communication module into the SR55.

Modbus TCP Communication Module

Allows an SR55 soft starter to be connected to a Modbus TCP network using TCP/IP protocol.

Refer to “Configuration and Parameters” Chapter 3 and “Communications” Chapter 5 of this user manual for detailed parameter and Modbus addressing information. (Modbus TCP uses the same parameters and addresses as does serial Modbus.).

Refer to the installation instructions in the following section. Great care must be taken when inserting the communication module into the SR55.

Communication Module Installation Instructions

The following installation instructions apply to both network communication modules:

- *EtherNet/IP Communication Module SR55-CM-ENETIP*
- *Modbus TCP Communication Module SR55-CM-MODTCP*

These option modules are specifically designed to be used with the SR55 range of soft-start products, and are intended for professional incorporation into complete equipment or systems. Incorrect installation may present a safety hazard. Before commencing installation and commissioning, the user should ensure that they are fully familiar with the SR55 unit, and in particular have read the important safety information and warnings contained in this SR55 User Manual.

Instructional Video

https://www.youtube.com/watch?v=ybqj_hwGrm8

Written Instructions

1) Ensure that all power is removed from the SR55 soft starter prior to installing the option module.
2) Remove the blanking plate from the SR55 option module slot.
3) Carefully slide the communication module into the SR55's communication slot applying slight downward force and forward pitch as shown in Fig 1a and Fig 1b in order to ensure the guide channels on the communication module Fig 2 align to the guide rails in the starter Fig 3.

Fig.1a

Fig.1b

Fig.2

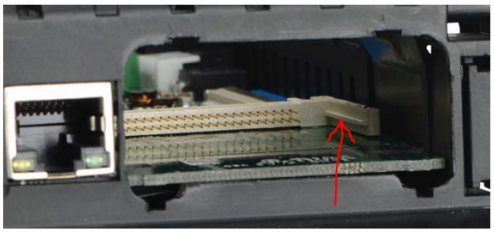

Fig.3

4) An image of the starter taken apart is shown for reference of how the module fits into these guide rails, see fig 4. Please note: This view cannot be accessed on a purchased SR55 unit. This picture was taken on a unit that was taken apart beyond repair for the purposes of illustrating this procedure.

Fig.4

Communication Module Installation Instructions – Optional Accessories (continued)

5) After the module has been pushed in, the module may feel like it has been seated but may not have. Fig 5a shows a module that may appear to be seated but is not, notice the slight gap between the module flange and the SR55 chassis. Fig 5b shows the properly seated module. Fig 6 shows the pins not fully engaged in this same unseated module. (*Fig 6 view is from a disassembled SR55; for reference only.*)

Fig.5a (not seated)

Fig.5b (seated properly)

(Fig 6 view is from a disassembled SR55; for reference only.)

Fig.6

6) This is caused by the two plastic clips on the bottom side of the module shown in fig 7 and are responsible for holding the module firmly to the printed circuit board once installed. These clips can get caught on the printed circuit board (Fig 8). To be seated properly and fully engaged, the module will need to be pushed down in order to have the clips snap around the printed circuit board. Figure 9 shows a properly seated and engaged module on the SR55.

Fig.7

Fig.8

Fig.9

7) Tighten the two screws on the option module using a T9 torx driver to secure it in place.

8) The SR55 will automatically configure upon its next power-up after the option module is installed.

Replacement/Spare Parts

SR55 Replacement Parts *		
Part Number	***Description***	***For SR555 Models***
SR55-FAN-2(1)	Cooling fan, replacement, 24VDC*, for size 1 SR55 series soft starters, 60 x 60 x 15 mm	-017 thru -096
SR55-FAN-3(1)	Cooling fan, replacement, 24VDC*, for some size 2 SR55 series soft starters, 80 x 80 x 15 mm	-124
SR55-FAN-6(1)(2)	Cooling fan, replacement, 12VDC*, for some size 2 SR55 series soft starters, 80 x 80 x 20 mm	-156 & -180
SR55-FAN-7(1)(3)	Cooling fan, replacement, 24VDC*, for size 3 SR55 series soft starters, 120 x 120 x 25 mm	-242 thru -361
SR55-FAN-8(4)	Cooling fan, replacement, 115VAC*, for size 3 SR55 series soft starters, 171 x 151 x 51 mm	-414 thru -477
SR55-KPD	Touchscreen, replacement, for Stellar SR55 series soft starters	all

** These items are exact replacements for the comparable part that is originally installed on the applicable SR55. The power for the fans is internally sourced from the applicable SR55 soft starter.*

(1) All fans (except SR55-FAN-8) come with 3 butt-splice terminals. If replacement terminals are needed, they can be purchased from a third party distributor. PN: UY2; MFG: 3M.

(2) SR55-FAN-6 12VDC fans fit SR55-156 and SR55-180 soft starters. Some early models of these starters were equipped with 24VDC fans, and two SR55-FAN-6 kits will be required for those models as both fans will require replacement. These fan kits include wiring connectors and a resistor for use only with those 24VDC soft starters. Refer to the Replacement Method Selection Flowchart on page 6–11 to determine whether or not your soft starter requires two SR55-FAN-6 fan kits.

(3) SR55-FAN-7 also comes with 4 push rivets. If replacement rivets are needed, they can be purchased from a third party distributor. PN:SR-4070B; MFG: Essentra Components.

(4) SR55-FAN-8 uses 1/8" quick-connect terminals.

Replacement Cooling Fans

These cooling fans are exact replacements for the fans that are originally installed on the applicable SR55.

The fans normally run during the following conditions:

1) During the Ramp and Dwell periods.
   (Will continue running if heatsink temperature meets criteria #3)
2) During Stop.
   (Will continue running if heatsink temperature meets criteria #3)
3) If heatsink temperature >45°C [113°F].
   (Turns off when temperature <39°C [102°F])

Cooling Fan Replacement Method Selection Flowchart

Use the flowchart below in order to determine which fan replacement method and instructions to use.

Note for SR55-156 and SR55-180 Soft Starters Cooling Fan Replacement

For SR55-156 and SR55-180 soft starters, the fans and internal fan supply voltage could be either 12VDC or 24VDC, depending upon when the soft starter was manufactured. The replacement fan kit (SR55-FAN-6) includes a 12VDC fan and a resistor for use in the 24VDC starters as described below.

For early-model SR55-156 and SR55-180 soft starters, one of the original fans must be removed to observe the voltage rating label. SR55-156 and SR55-180 soft starters with original equipment 24VDC fans will require two SR55-FAN-6 fans kits, and both fans will need to be replaced.

SR55 Soft Starter Fan Replacement Method Selection

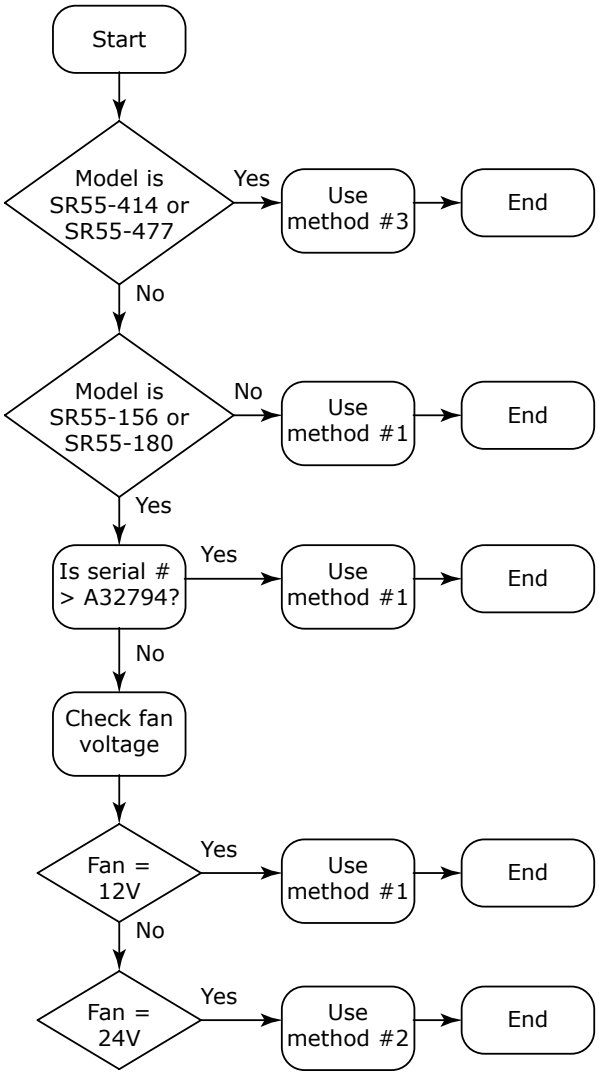

Cooling Fan Replacement Method #1 Instructions

This fan replacement method is applicable for all SR55 soft starters other than certain SR55-156 and SR55-180 models originally equipped with 24VDC fans, and SR55-414 and SR55-477 models.

NOTE: Refer to the Cooling Fan Replacement Method Selection Flowchart on page 6–11 to determine which replacement method and instructions to use for your soft starter.

Instructions for *Fan Replacement Method #1*

1) Unscrew existing fan(s).*

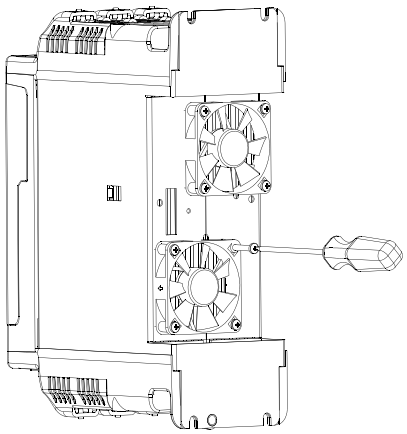

2) Cut wires close to fan(s).

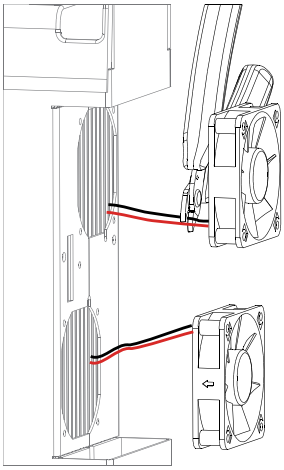

3) Fit black wires from new fan and SR55 into connector (included).

4) Push connector shut with pliers.

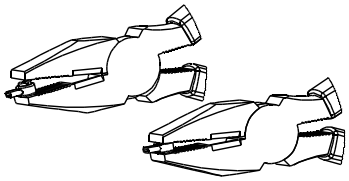

5) Repeat with 2nd pair of black, then 2 pairs of red wires.

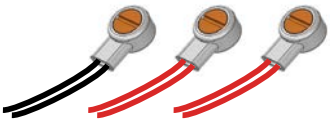

6) Position fan(s) and connectors.*

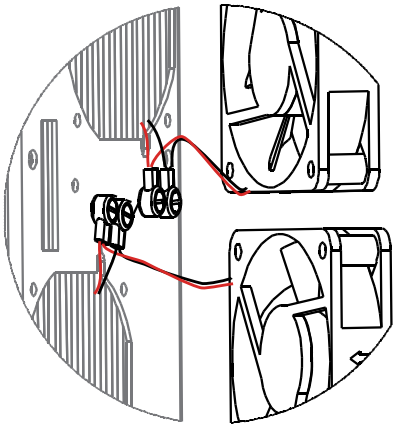

7) Affix new fan(s) to SR55.*

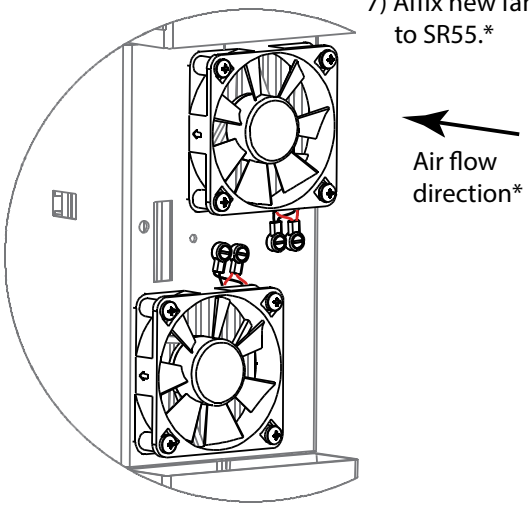

** When installing the new fan, ensure that airflow is into the soft starter. (Note the airflow directional arrow on the fan.)*

* Soft starters SR55-242, -302, and -361 have metal fan guards fitted for safety reasons. These must be removed before the fans can be taken off, and they MUST be refitted using the supplied push rivets after the new fans have been attached.

Cooling Fan Replacement Method #2 Instructions

This fan replacement method is applicable only for certain SR55-156 and SR55-180 models originally equipped with 24VDC fans. These particular soft starters with original equipment 24VDC fans will require two SR55-FAN-6 fan kits, and both fans will need to be replaced. The replacement fan kit (SR55-FAN-6) includes a 12VDC fan and a resistor for use in the 24VDC soft starters as described below.

NOTE: Refer to the Cooling Fan Replacement Method Selection Flowchart on page 6–11 to determine which replacement method and instructions to use for your soft starter.

Important: For models SSR55-156 and SR55-180 with 12V fans, refer to Method #1.

Instructions for *Fan Replacement Method #2*
Only for SR55-156 & SR55-180 Originally Equipped with 24VDC Fans

1) Unscrew fan(s)

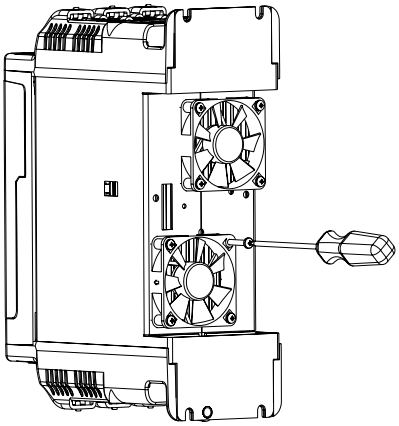

2) Cut wires as close to fan(s) as possible

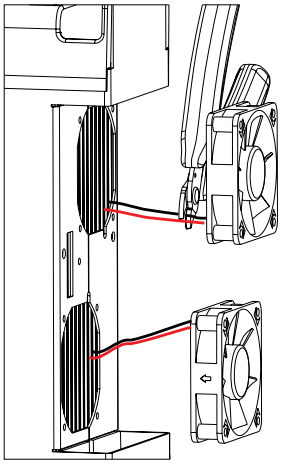

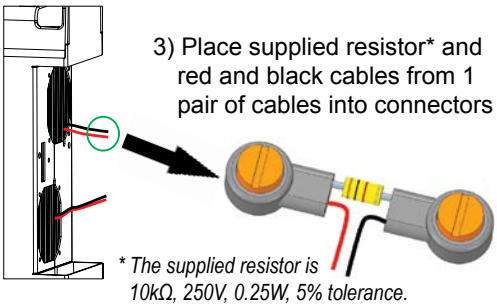

4) Press both connectors shut with pliers

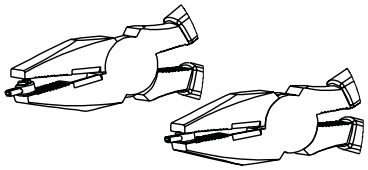

5) Push assembly between fins of heatshink until flush

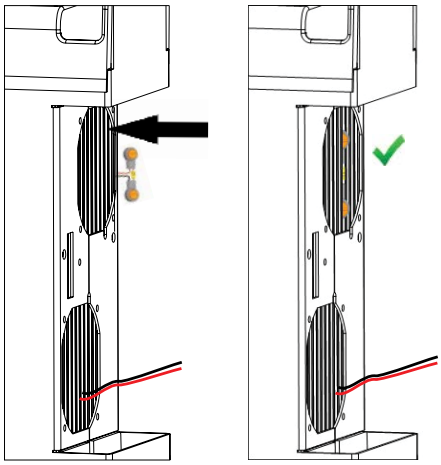

(instructions continued next page)

(fan replacement method #2 instructions continued from previous page)

6) Select the Black wires as shown below and place into connector

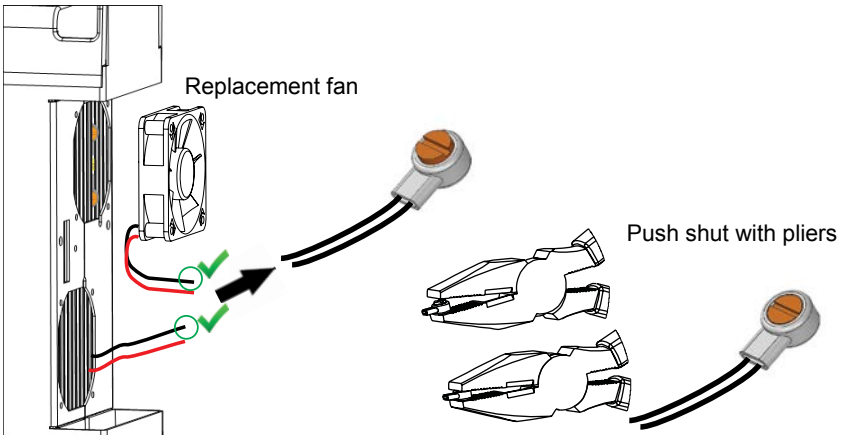

7) Select the Red wires as shown below and place into connector

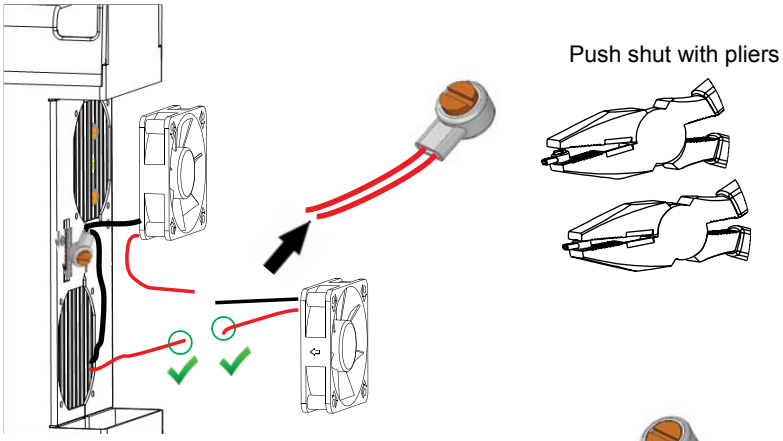

8) Place and crimp the two remining wires (1 Red wire and 1 Black wire) into the final connector using the method above

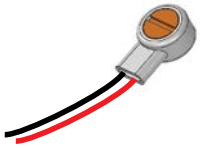

9) Position fans and connectors

10) Affix new fan(s) to soft strarter

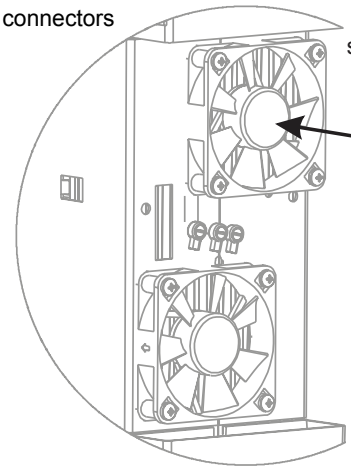

Schematic representation of correct fan wiring

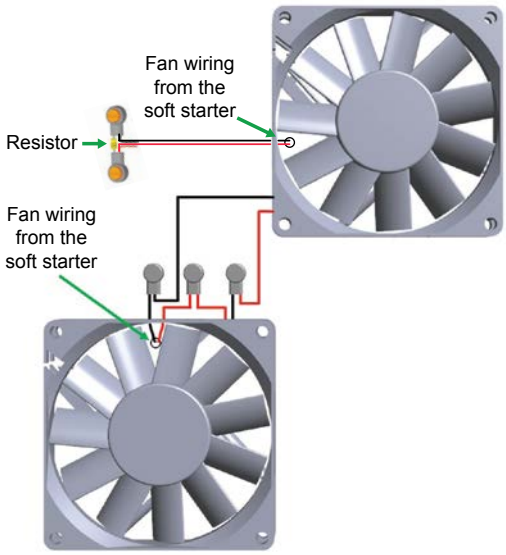

Cooling Fan Replacement Method #3 Instructions

This fan replacement method is applicable only for SR55-414 and SR55-477 models.

Instructions for *Fan Replacement Method #3*
Only for SR55-FAN-8; SR55-414 & SR55-477 Soft Starters

1) Remove 4 screws from lower end molding.

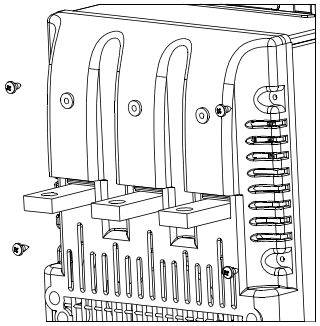

2) Slide lower end molding off of busbars.

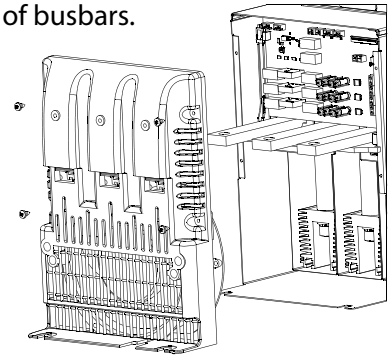

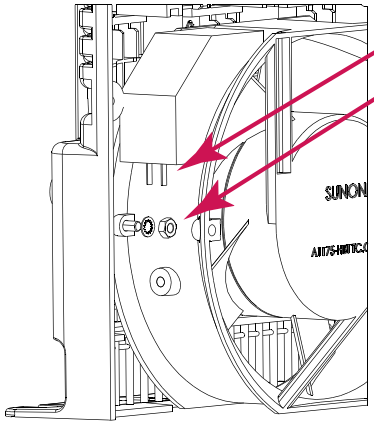

3) Pull wires off of connectors.

4) Fans held with M4 screws in 2 positions.

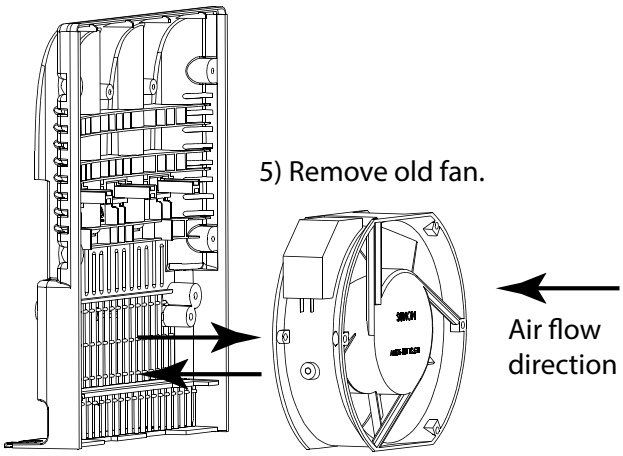

5) Remove old fan.

6) Install new fan.

7) Reassemble in reverse order. (Orientation of wires is not critical.)

Replacement/Spare Parts (continued)

Replacement Touchscreen

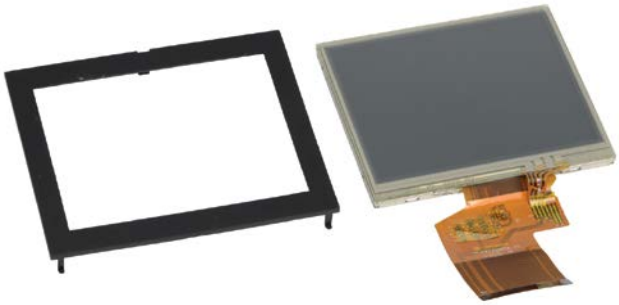

These touchscreens are exact replacements for the touchscreens that are originally installed on the SR55 soft starters.

Touchscreen Replacement/Installation Instructions

1) Carefully remove the outer bevel casing around the LCD display.

2) Remove the two plastic rivets below the LCD display. Use a small screwdriver to pry the rivets out.

3) When removing the LCD display and PCB, slowly lift from the top left corner.

4) Gently remove the LCD and PCB at an angle, so they can be lifted from the unit. Take care not to apply excessive force.

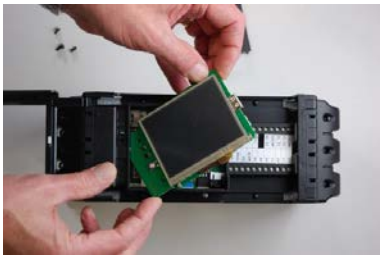

Replacement/Spare Parts (continued)

Touchscreen Replacement/Installation Instructions (continued)

5) On the reverse side of the PCB, remove the FFC cable from the socket (lift gray part from front edge; do not force.)

6) Place the replacement screen FFC cable in socket, making sure that it is correctly seated. Push the gray part down to lock.

7) Once the socket is locked with the FFC cable firmly connected, gently place the board back in to the previous position, using the same angled technique.

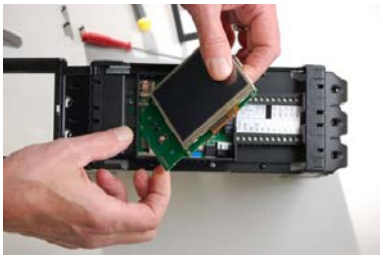

8) Place the PCB flat in position.

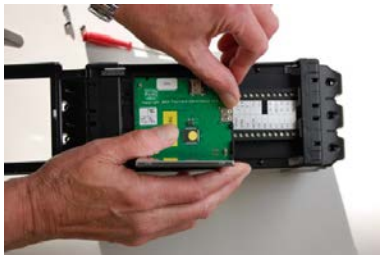

9) Make sure that the screen is correctly aligned, and place the outer bevel back on the LCD display.

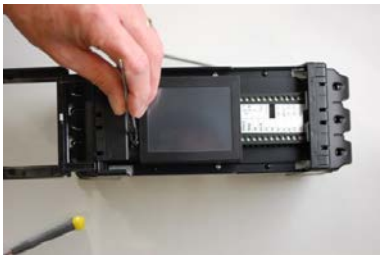

10) Once you have placed the outer bevel back on the LCD display, ensure that the two plastic rivets below the LCD display are re-installed.

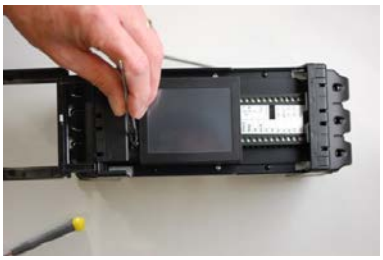

BLANK
PAGE

Updating Firmware

Appendix

A

Table of Contents

Appendix A: Updating Firmware A–1
Updating SR55 Firmware A–2

Updating SR55 Firmware

Firmware updates are normally not necessary for the SR55 family of soft starters. If, after talking with AutomationDirect Technical Support, it is determined that your SR55 requires a firmware update, please follow the procedure outlined below. It is advised to save your configuration profile to a USB before updating firmware (Home → Device → Parameters to USB).

Instructions for updating the firmware of an SR55 soft starter.

1) Obtain a USB flash drive, and ensure that it has been formatted to FAT32.

   ADC part number USB-FLASH is a 4GB SanDisk USB flash drive that has been verified to work with the SR55. Other flash drives may be too wide to fit, or may not perform correctly.

2) Download a new firmware zip file from the Technical Support Firmware Upgrades page of the AutomationDirect web site: (http://support.automationdirect.com/firmware/index.html).
3) Copy the zip file into a suitable location on your PC that you can extract all of the firmware files.

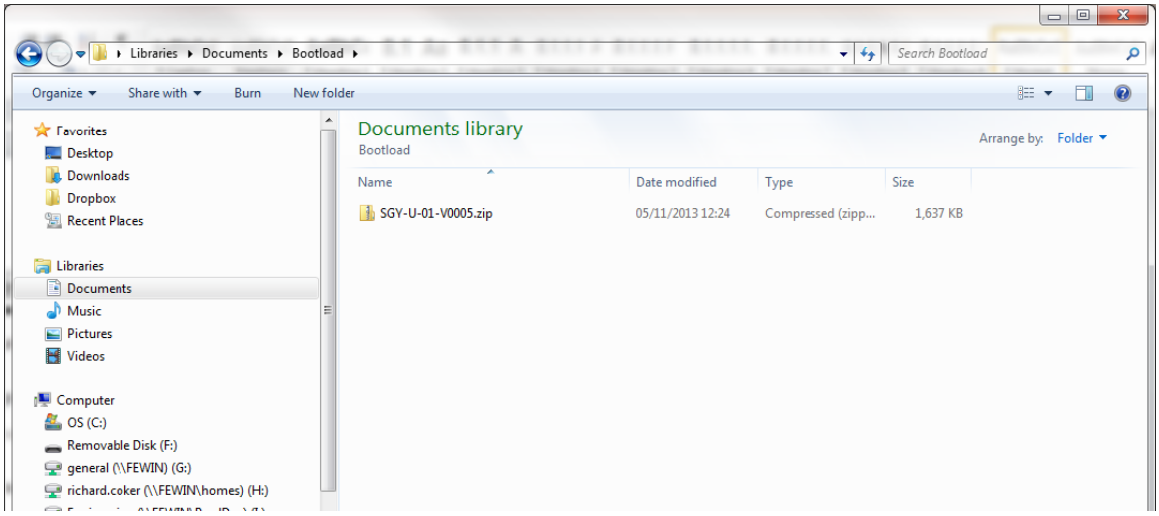

4) Right click on the zip file and select extract all. This will create an unzipped directory in the same location with the same name.

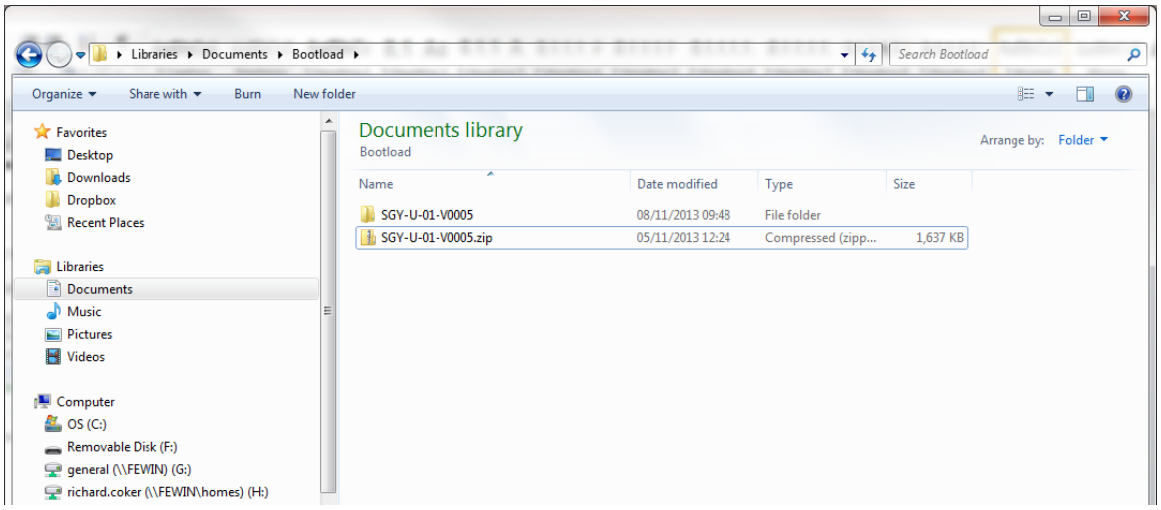

5) Double click on the new directory and inside you will see all of the boot-loading files. Select all of these files and copy them onto the route directory of the USB flash drive.

Extracted Folder on PC

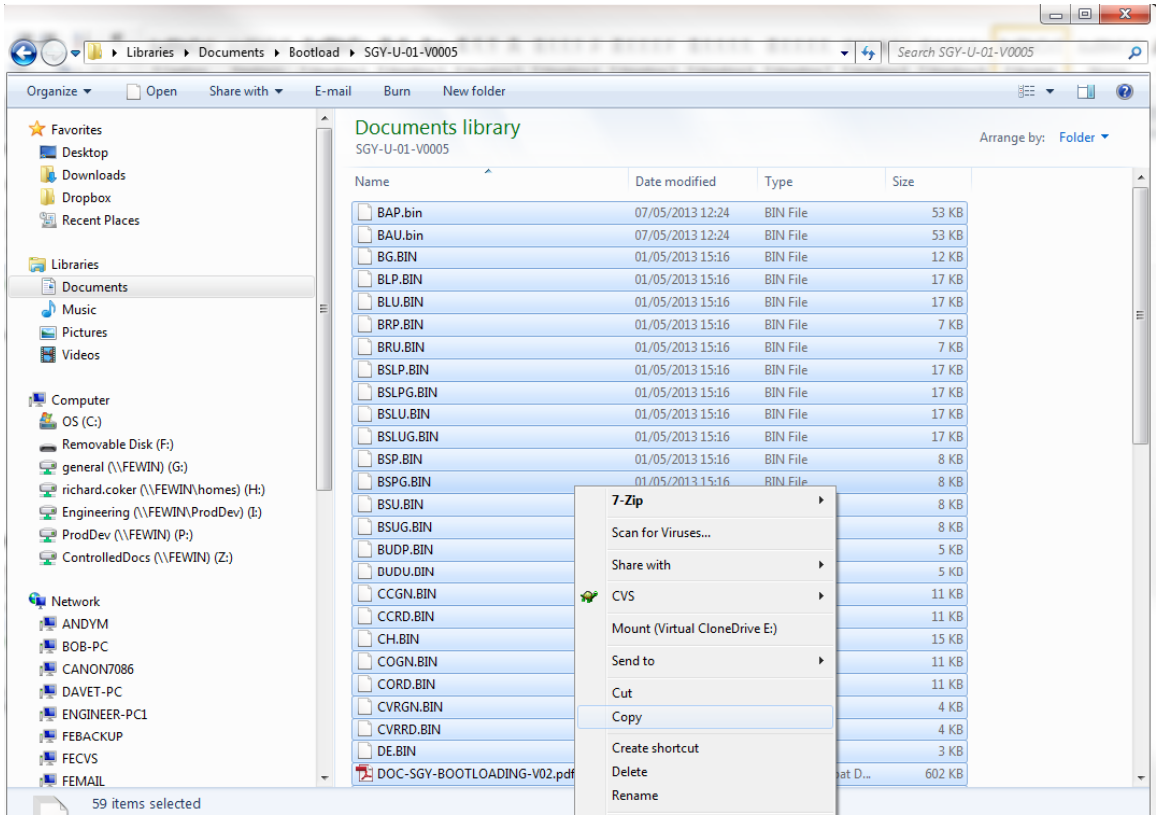

USB Flash Drive

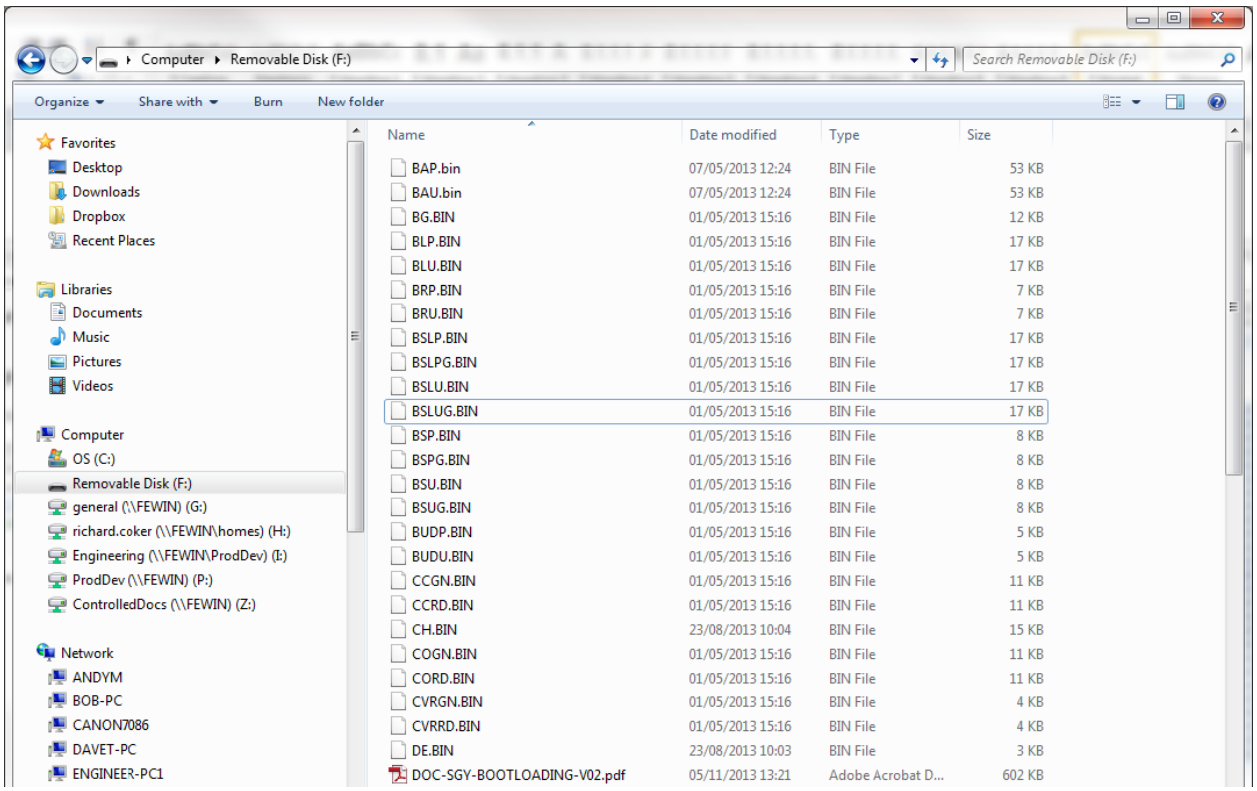

6) If it is the first power-up, the SR55 will display the “Automatic Set Up” screen. This screen can be skipped when you plan to carry out a firmware update. To do this, select “Advanced,” then press back, and the status screen will be displayed.

7) Insert the USB flash drive which contains the new issue of the boot-load firmware into the USB connector on the SR55. (The flash drive is shown in red above the touchscreen.)

If using the remote touchscreen, you will have to update the firmware on that touchscreen also. Follow the same procedure, but insert the USB flash drive into the back of the remote touchscreen.

8) Navigate through “Home,” “Device,” and “Update Firmware” screens to get to the firmware upgrade page. This page shows the currently installed firmware, as well as the firmware which is to be uploaded.

9) Once “Update Firmware” and “Confirmation to Update firmware” has been selected, a loading bar will appear which shows the update process has begun.

10) Wait for approximately one minute for the updating firmware screen to be displayed. This screen shows the progress of the firmware being installed on the SR55. There are three stages of installation.

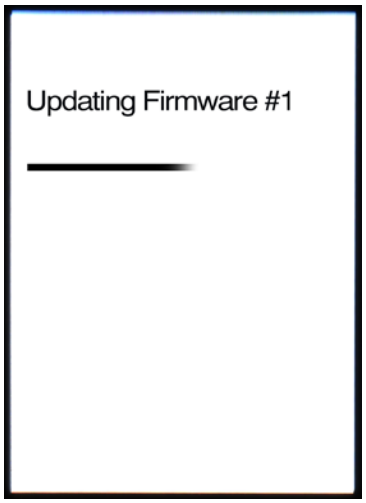

11) Once the updating process is complete, the SR55 will reboot. When it has fully rebooted the status screen will appear.

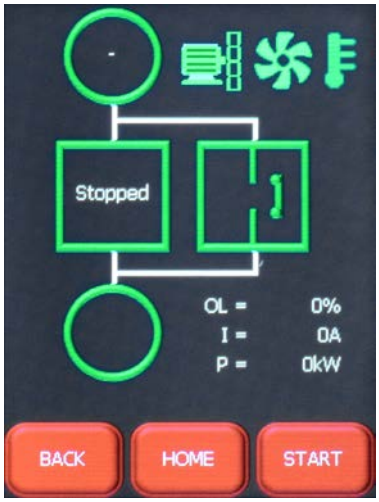

BLANK
PAGE

Appendix B: Soft Starter Application Considerations

Appendix B

Table of Contents

Appendix B: Soft Starter Application Considerations . . . B–1
B.1 – Motor Suitability and Associated Considerations. . . . B–2
B.1.1 – Suitability. . . . B–2
B.1.2 – Induction Motor Characteristics . . . B–2
B.1.3 – Rating. . . . B–2
B.1.4 – Maximum Motor Cable Length. . . . B–3
B.1.5 – Power Factor Correction Capacitors . . . B–3
B.1.6 – Lightly Loaded Small Motors . . . B–3
B.1.7 – Motors Installed with Integral Brakes . . . B–3
B.1.8 – Older Motors. . . . B–3
B.1.9 – Wound-rotor or Slip-ring Motors . . . B–3
B.1.10 – Enclosures . . . B–3
B.1.11 – Efficiency . . . B–4
B.1.12 – High-Efficiency Motors . . . B–4
B.1.13 – EU Compliance with the EMC Directive . . . B–4
B.1.14 – Fuses . . . B–4
B.2 – Rules for Specific Applications . . . B–5
B.2.1 – In-Delta Operation . . . B–5
B.2.2 – High-Inertia Loads. . . . B–5
B.2.4 – Resistive Loads. . . . B–5
B.2.5 – Frequent Starting . . . B–5
B.2.6 – Optimizing . . . B–5
B.2.7 – Soft Stopping . . . B–6
B.2.9 – Replacement of Fluid Couplings . . . B–6
B.2.12 – Overhauling Loads . . . B–6
B.2.13 – Application Table. . . . B–6
B.3 – Concepts and Principles of Fixed-Speed Induction Motor Starting and Control. . . . B–8
B.3.1 – Introduction . . . B–8
B.3.2 – The Induction Motor . . . B–8
B.3.3 – Starting Induction Motors . . . B–10
B.3.4 – Electro-Mechanical Methods Of Starting . . . B–11
B.3.5 – The Semiconductor Motor Controller . . . B–12
B.3.6 – Running Induction Motors . . . B–13
B.3.7 – Reliability Considerations . . . B–14
Appendix B Glossary of Terms . . . B–15

B.1 – Motor Suitability and Associated Considerations

The SR55 Soft Starter is based on a series of microprocessor-based optimizing soft starters which have been used world-wide in more than 100,000 critical and non-critical systems. Since 1983, these soft starters have successfully operated with almost every type of load and environment from the Antarctic to the jungle. The design has proven to be both reliable and adaptable, and provides a powerful mechanism with which to control fixed-speed induction motors.

However, due to the intrinsic differences between electronic and electro-mechanical starting systems, there are a number of simple rules and observations to follow when using the SR55 Soft Starter. This section introduces guidelines for the user and those incorporating the unit as part of their system design.

B.1.1 – Suitability

In principle, any three-phase induction motor can be started by a soft starter. Normally, the breakaway torque of the load should be less than the full-load torque of the motor, unless a motor with a high locked-rotor torque characteristic is employed. As a quick assessment, any load which has a low or no-load start with a moderate starting time, or which can be started with a star-delta (wye-delta) starter, auto transformer or other forms of reduced-voltage starting, can be considered a potential application for a soft starter.

B.1.2 – Induction Motor Characteristics

Three-phase induction motors are required to provide sufficient torque to accelerate the motor and its load from standstill to full speed, and to maintain full speed efficiently at all torque levels up to the design full-load torque. Most modern three-phase induction motors have characteristics that are wholly suitable for use with soft starters. However, the characteristics vary considerably between different manufacturers and design types.

It is important that the motor is capable of providing sufficient torque to drive the load at all speeds from standstill to rated speed, to enable the SR55 to function properly. It is particularly important that the motor to be soft started does not have a low pull-up or saddle torque, or the load may not be accelerated correctly.

The primary function of the soft starter is to act as a torque-regulating device. It cannot apply a torque greater than that which the motor generates. For this reason, problematic applications for which many different starting methods have been tried but failed may need analysis of the motor or load performance before a soft starter can be successfully applied.

B.1.3 – Rating

For most applications, except high inertia loads, the starting demands and the inertia of the rotating masses are small enough to be insignificant. This means that no special consideration needs to be given to the rating of the soft starter, other than to ensure that it is equal or marginally greater than the rated voltage and current of the controlled motor.

Alternatively, if the number of poles of the motor and the moments of inertia of the load (J_{load}) and motor rotor (J_{motor}) are known, a soft starter will be suitable if the figures comply with the criteria given in the bottom row of Table B.1.3.

Table B.1.3

Number of Poles	2	4	6	8
Synchronous Speed (rpm @ 60 Hz)	3600	1800	1200	900
$(J_{load})/(J_{motor})$ less than	5	15	20	25

Section B.2.13 contains a table showing the more common applications.

B.1.4 – Maximum Motor Cable Length

The length of the cable between the output terminals of the starter and the motor should not normally be greater than 100 meters [328 ft].

B.1.5 – Power Factor Correction Capacitors

Power factor correction capacitors applied to a single motor must ALWAYS be connected by a separate contactor placed on the SUPPLY side of the SR55 Soft Starter. Capacitors should be switched into the circuit after top-of-ramp (full line voltage) is reached, and switched out of the circuit before a stop is initiated.

It is important that any total system PFC scheme that automatically corrects for a range of inductive loads is not operated in such a way as to leave it heavily over compensated since this might introduce oscillations leading to damaging over-voltages.

B.1.6 – Lightly Loaded Small Motors

Lightly loaded small-sized (less than 2kW [2.7 hp]), star connected motors can produce high voltages at the motor terminals when shut down by simply opening the line contactor. As these voltages can damage the soft starter, it is safer to control the opening of the line contactor with the soft starter run relay contacts.

B.1.7 – Motors Installed with Integral Brakes

Motors that include an integral, electrically operated brake internally connected to the motor input terminals can only be soft started when the brake is re-connected to the supply through its own contactor. (Do NOT soft start the brake.)

B.1.8 – Older Motors

The action of the fully-controlled soft starter introduces harmonic currents and voltages to the motor. Therefore, it is important to ensure that the motor employs techniques such as rotor skewing in its construction to suppress the effects of harmonic fluxes and avoid rough starting. This is rarely a problem with modern motors, because nearly all motors designed in the last 20 years employ these techniques.

B.1.9 – Wound-rotor or Slip-ring Motors

Slip-ring induction motors ALWAYS need some resistance in the rotor circuit to ensure that sufficient rotational torque is generated to overcome any alignment torque, which is present at start-up. The resistance can be safely shorted out in the normal fashion with a contactor controlled by the programmable relay set as ‘top-of-ramp’ contacts.

B.1.10 – Enclosures

Thyristors are not perfect conductors, and the passage of current through them causes heat dissipation in the body of the soft starter, which in turn causes the heatsink temperature to increase. As a guide, the heat generated is 1 watt/amp/phase, which equates to a dissipation of 30 watts from the heatsink for a line current of 10 amps. Therefore, all cabinets or enclosures that house soft starters should have adequate ventilation. (For more detailed information, refer to Chapter 1: Mechanical Installation.)

B.1.11 – Efficiency

Although the use of the soft starter introduces a power loss, the system still retains an overall efficiency of approximately 99.5%. If the iERS function is selected, then the gain in motor efficiency at partial loads is far greater than the loss of efficiency arising from thyristor heat losses. If prolonged operation at full load is expected, the thyristor loss can be eliminated (as in some matched motor/pump drives) by closing the internal bypass contactor around the thyristors. (SR55 soft starters have an internal bypass contactor that is automatically activated when at full load when iERS is turned on.)

B.1.12 – High-Efficiency Motors

Due to an inherently steep front to the speed/torque curve, high-efficiency motors can exhibit instability when lightly loaded, and the iERS parameter group may need to be adjusted to compensate.

B.1.13 – EU Compliance with the EMC Directive

When considering the use or fitting of any Soft Starter, users and installers in European countries must comply with the EMC Directive 2004/108/EC. The manufacturer of the soft starter has a statutory obligation to provide a guide for compliance with this directive.

For the SR55, this guidance is given in the EMC guide, which is Appendix C of this user manual. It is essential that users and installers understand and comply with the requirements described in these sections.

B.1.14 – Fuses

Circuit protection fuses should be rated to allow for the extended start times associated with the use of a Soft Starter. Traditional HRC motor fuses may need to be rated higher than the motor rated current for normal low-inertia applications, but modern “extended start” fuses will generally give full motor protection. (See also section B.2.2 relating to high inertia loads.)

Semiconductor fuses are available for the short-circuit protection of the thyristors in the SR55. See the “Fuse and Current Ratings” section in chapter 2 (“Electrical Installation”) of this manual for semiconductor fuse recommendations and details of the Overload incorporated into the SR55.

B.2 – Rules for Specific Applications

B.2.1 – In-Delta Operation

The SR55 control system allows the soft starter to be installed "in the delta" connections of the motor, which can permit the use of a lower current rated unit. However, in this mode of operation it is important that the soft starter is connected in accordance with the relevant wiring diagram. The power-circuit wiring diagram in Chapter 2, "Electrical Installation" gives detailed instructions for this configuration. If motor rotation is incorrect, the connections should be changed as described in the diagram. It should be noted that six connections are required between the motor and soft starter. The "Firing Mode" parameter must be set for delta mode, which also disables iERS (Chapter 3: Configuration and Parameters). For SR55 soft starters, an in-line isolation contactor controlled by the soft starter MUST be used with the In-Delta Firing Mode and motor connections.

B.2.2 – High-Inertia Loads

High-inertia loads, such as centrifugal and axial fans, grinders, flywheel presses, etc., may require a larger size soft starter than the motor. For example, a 75kW [100 hp] starter may be needed for a 55kW [75 hp] motor. This is necessary to allow for the extra heating effects of the prolonged over-current on the soft starter thyristors during the extended starting time. If very high-inertia loads are involved, then an analysis of the starting characteristics should be made. This requires accurate data about the motor and the load:

- *Complete motor data: Current, Voltage, Power, Speed, Rotor Inertia, Speed/Torque/Current curves.*
- *Complete load data: Type of load, Speed, Inertia, Speed/Torque curve, Power absorbed or Full-load Torque.*

Consideration must also be given to thermal overload and fuse protection systems when extended start times are involved. This is the case for heavy duty starting, as a standard thermal overload will trip under these conditions. A heavy-duty start thermal overload or an electronic overload with dual settings for start and run is recommended. Modern HRC motor fuses will allow for some overload during the start, but the fuse curve, giving time/current data, will give an indication of suitability for the particular application.

B.2.4 – Resistive Loads

AutomationDirect does not support the control of resistive loads with the SR55 Soft Starter.

B.2.5 – Frequent Starting

High starting frequencies require careful consideration of the soft starter thermal capabilities. In many cases a standard sized SR55 may be suitable, as start times are generally shorter for this type of application. If this is not the case, then a larger soft starter may be required.

B.2.6 – Optimizing

Drives which operate for long periods of time at less than their rated capacity can benefit from the energy saving function (iERS optimizing) of the SR55, which adjusts the thyristor triggering to reduce the excitation losses of the motor. This feature will lower the running temperature of the machine and help to extend its life. See Chapter 4, Principles of the Energy Saving Mode (iERS).

B.2.7 – Soft Stopping

Soft stopping can reduce positive surge pressures in pipelines on shutdown. It is necessary to make sure that the ramp-down time is long enough to remove the energy from the fluid before the firing of the thyristors is stopped. Otherwise the surge pressure may still be present. Soft stopping can also be successfully applied to loads such as conveyor belt systems where sensitive items such as bottles are being transported.

B.2.9 – Replacement of Fluid Couplings

Soft-starters can replace fluid couplings yielding benefits of higher efficiency running and lower costs to the user. If the coupling is used to magnify the available breakaway torque, it may be necessary to replace the installed motor with another of a larger size, or one with a high starting torque characteristic before a soft starter can be employed.

B.2.12 – Overhauling Loads

Certain applications can overspeed the motor as part of normal operation. Power then flows from the motor to the power supply. It is important to disable the iERS optimizing mode during over-speed conditions, and reinstate the optimizing mode during normal conditions. (External control or communication is required to disable and reinstate iERS.)

B.2.13 – Application Table

The table on the following page shows many common motor applications that suit the SR55 soft starter. It lists typical breakaway torque requirements as a percentage of motor full-load torque (FLT). For the most satisfactory soft starter in a given application, the motor should have a full-voltage locked-rotor-torque (LRT) that is at least twice the breakaway torque (e.g. for a reciprocating compressor the FLT is normally in the region of 50% motor LRT.) As a general rule, the higher the motor LRT is above the load breakaway torque, the greater the control over the starting process.

B.2.13 – Application Table (continued)

Table B.2.13 – Applications		
Application	**Breakaway Torque (%FLT)**	**Remarks**
Agitator	35	–
Air compressor- rotary, unloaded start	25–35	–
Air compressor- reciprocating, unloaded start	50–100	–
Air compressor- screw type, unloaded start	30	Usually two-pole motor
Ball mill	30–50	Eccentric load, needs high starting torque motor
Carding machine	100	Often high inertia
Centrifuge	50–90	Usually high inertia
Centrifugal fan- dampers closed	10–25	Usually high inertia
Centrifugal fan- dampers open	10–25	Usually high inertia, very long ramp times
Centrifugal blower- valve closed	25–35	–
Centrifugal blower- valve open	30–40	Can have long ramp time
Conveyor- horizontal, unloaded	10–50	–
Conveyor- horizontal, loaded	100–150	–
Conveyor- vertical lifting, unloaded	50–85	–
Conveyor- vertical lifting, loaded	100–175	–
Conveyor- vertical lowering, unloaded	10–40	–
Conveyor- vertical lowering, loaded	10–25	–
Crusher (not rock)- unloaded	25–75	Can be high inertia
Drilling machine- unloaded	10	–
Fan, axial-flow propeller	20–40	–
Feeder- screw	100–175	Needs high starting torque motor
Feeder- vibrating, motor driven	100–150	Needs high starting torque motor
Grinder- unloaded	10–25	Usually high inertia
Hammer mill	20–125	Eccentric load, needs high starting torque motor
Mills- flour etc.	30–50	–
Mixer- dry contents	35–75	–
Mixer- fluid contents	10–40	–
Mixer- plastic contents	75–125	High torque motor offers advantage
Mixer- powder contents	75–125	High torque motor offers advantage
Pelletizers	50–100	–
Press, flywheel	50–150	Needs high starting torque motor
Pump- centrifugal	10–25	Soft stopping useful
Pump- positive displacement, piston type	100–175	Needs high starting torque motor
Pump- vane type, positive displacement	100–150	Needs high starting torque motor
Rolling mill	30–50	–
Saw, band	10–35	–
Saw, circular	25–50	May be high inertia; Plug brake may be useful
Screen, vibrating	30–60	–
Transformers, voltage regulators	Nil	Change firing mode
Tumblers	30–100	Can be eccentric load, may need high torque motor

B.3 – Concepts and Principles of Fixed-Speed Induction Motor Starting and Control

Since its invention one hundred years ago, the standard three-phase induction motor has become one of the most familiar items of industrial equipment ever known. Due to its simplicity of construction, low cost, reliability, and relatively high efficiency, it is likely to remain the prime source of mechanical energy for the foreseeable future.

B.3.1 – Introduction

Energy conversion, from the electrical supply to rotating mechanical energy, is a characteristic of all motors. To regulate energy flow, most motor circuits require a mechanism to connect and disconnect them from their electrical power source. Electro-mechanical switches, known as "contactors," are the standard means of achieving this control. Even today, more than one hundred years after their introduction, contactor-based systems remain the most widely used method of motor control.

Nevertheless, there is a definite trend towards more sophisticated electronic systems of control being applied to fixed-speed motor drives. This section will discuss these forms of control; namely electronic microprocessor-controlled optimizing soft starters such as the SR55.

B.3.2 – The Induction Motor

In order to appreciate the benefits of using an electronic controller, it is important to have some understanding of the characteristics and limitations of the induction motor and the electro-mechanical systems currently used to control them.

The standard, fixed-speed induction motor fulfills two basic requirements:

- *To accelerate itself and its load to full speed (or speeds with multi-speed motors).*
- *To maintain the load at full speed efficiently and effectively over the full range of loadings.*

Due to the constraints of materials and design, it can be difficult to achieve both objectives effectively and economically in one machine.

So, how does a motor start in the first place? As mentioned previously, motors convert electrical energy drawn from the power supply into a mechanical form, usually as a shaft rotating at a speed fixed by the frequency of the supply. The power available from the shaft is equal to the torque (moment) multiplied by the shaft speed (rpm). From an initial value at standstill, the torque varies, up or down, as the machine accelerates until reaching a peak at about two thirds of full speed, and then dropping to zero at synchronous speed. This characteristic means that induction motors always run at slightly less than synchronous speed in order to develop power (the 'slip speed'), and hence the term asynchronous. Figure B.3.2.1 shows a graph is of an induction motor torque/speed curve, and illustrates this important characteristic of asynchronous three-phase induction motors.

B.3.2 – The Induction Motor (continued0

Figure B.3.2.1: Torque/Speed Curve – Induction Motor

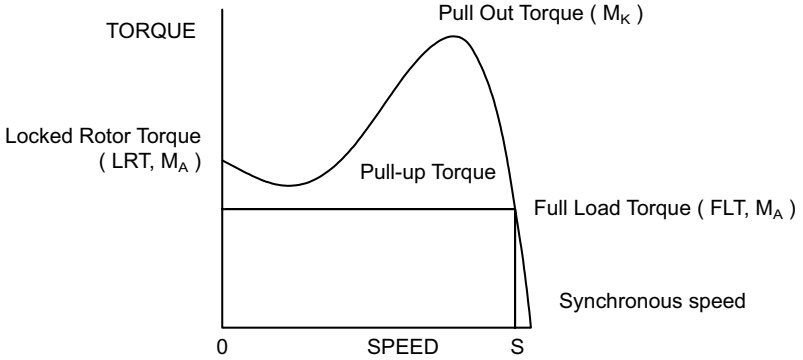

Torque/Speed Curve – Induction Motor

Figure B.3.2.2: Torque/Speed Curve – Coupled Load

Each load coupled to an induction motor has its own speed/torque curve:

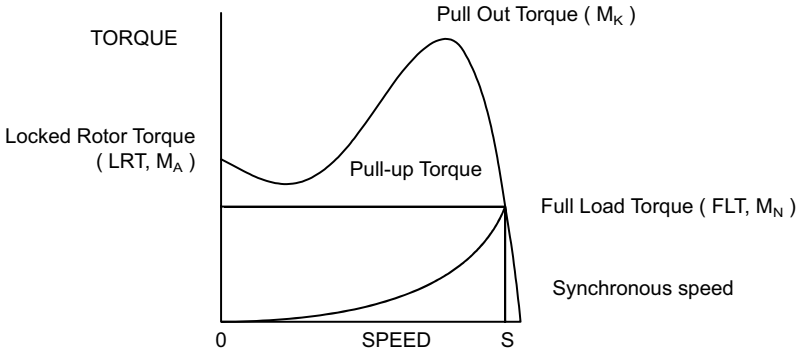

Torque/Speed Curve – Coupled Load

Figure B.3.2.3: Torque/Speed Curve – Accelerating Torque

The acceleration of a motor-load system is caused by the difference between the developed torque (motor) and the absorbed torque (load), and is shown by the shaded area in the next figure:

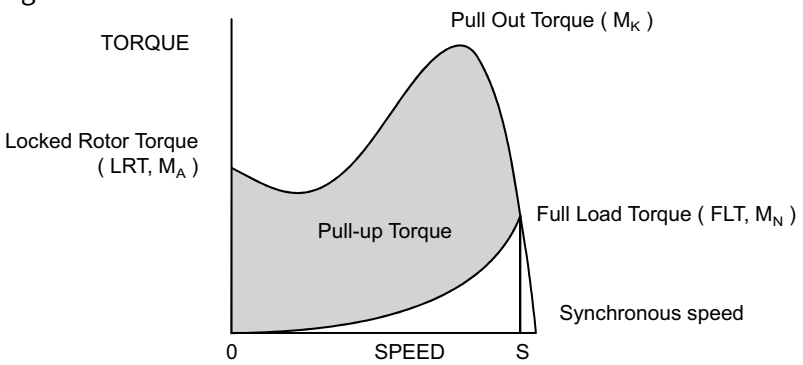

Torque/Speed Curve – Accelerating Torque

B.3.2 – The Induction Motor (continued)

Obviously, the larger the difference between the developed torque and the absorbed torque, the faster the acceleration and the quicker full speed is reached, and the greater the stresses experienced by the supply and drive systems during the acceleration process. An "ideal" start would accelerate the load with just sufficient force to reach full speed smoothly in a reasonable time, and with minimum stress to the supply and drive mechanisms.

Generally speaking, the motor speed/torque characteristic is controlled by the rotor resistance. A motor with high rotor resistance can generate its peak torque (pull-out torque) at standstill, giving the high break-away torque characteristic which reduces steadily as the speed increases, and becomes zero at synchronous speed. At the other end of the scale, a motor with a very low rotor resistance will produce a low starting torque, but will generate its peak torque closer to the synchronous speed. Consequently, this type of motor runs at full power with higher operating efficiency and low slip speed. It is possible to combine the twin requirements of high starting torque and efficient full-speed operation within a single motor by techniques such as double-cage or deep bar design, and this usually is the motor characteristic chosen for lifting and hoisting applications:

Figure B.3.2.4: Torque/Speed Curve – High Starting Torque

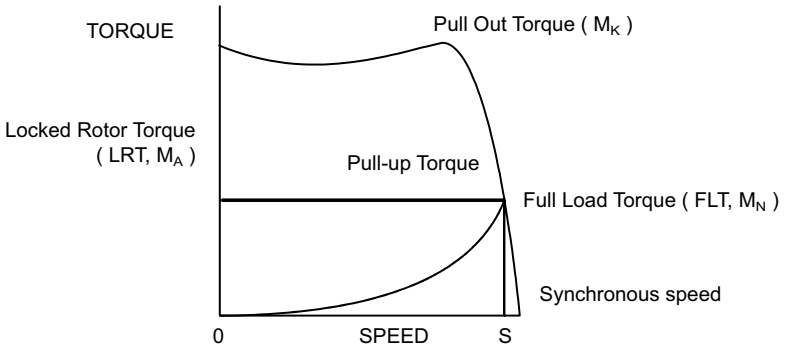

Torque/Speed Curve – High Starting Torque

However, most induction motors are designed to have a "standard" characteristic that provides a compromise between starting torque and operating efficiency. To summarize, an induction motor will only start and accelerate when it produces more torque than the connected load absorbs. This is true for all speeds, including standstill and full speed.

B.3.3 – Starting Induction Motors

Starting a demagnetized induction motor from standstill is a demanding and complex process. At the instant of switching, all the energy must be present that is necessary to magnetize the motor, to provide the acceleration force, to supply the kinetic energy of the rotor and load, and to overcome the mechanical and electrical losses. To do so at full supply voltage places considerable stresses on the supply, the motor windings, and the iron cores of the stator and rotor. Excessive acceleration of a rotor when the mechanical load is small can produce torque oscillations in the shaft, causing severe wear to transmissions, gears and drives. Excessive acceleration when the load inertia is high, such as in centrifugal fans, causes belts to slip on the pulleys, producing rapid wear and early failure.

B.3.4 – Electro-Mechanical Methods Of Starting

Method A: Direct-on-Line

The most simple means of controlling energy flow to an induction motor is to interrupt the power supply by a single contactor. Very widely applied, the method is known variously as "direct-on-line", "across-the-line", "direct", etc., and is the usual form of control where low cost is the first and most important consideration. As a result, it is most often used on small motor sizes (up to approx. 22 kW [30 hp]), or where the supply is strong enough to withstand the inrush and starting current surges without causing unacceptable voltage drops.

The harsh, damaging effects described earlier are all imposed by direct-on-line starting and, as a control method, it is the most destructive of equipment. Its simplicity and apparent low cost, although attractive at first sight, hide large cost penalties in the shape of increased maintenance, reduced transmission equipment life, and higher risk of motor failure, particularly when frequent starting and stopping is needed. In larger sized motors, special strengthening is necessary, at higher cost, before they can be safely used with direct-on-line starting.

However, the shortcomings of the direct-on-line starter have been recognized ever since motors have been used, and alternative systems have been developed over the years to reduce the damaging effects of this form of control.

Method B: Wye-Delta and other Reduced Voltage Starting Systems

Reduced voltage starting makes use of the fact that motor torque is proportional to the square of the terminal voltage. The most familiar type of reduced-voltage starter is the wye-delta, or star-delta starter.

Consisting of three contactors and a time switch (which can be mechanical, pneumatic, electrical, or electronic), the wye-delta starter changes the motor winding configuration from an initial wye connection to a delta connection as the motor accelerates. The change-over or transition point is controlled by the time switch and is usually arranged to be approximately at 80% of full speed. The effect of starting in the wye connection is to alter the voltage across each stator winding to 58% of normal. This reduces the starting torque to a third of locked rotor torque (LRT) with a consequent reduction in starting currents and acceleration forces.

Although an apparent improvement over the direct system, significant disadvantages still remain. The transfer from wye to delta momentarily removes the motor from the supply. During this time the motor is under the mechanical influence of the rotating load and, at the instant of disconnection, current will still flow in the rotor bars due to the time delay necessary for the magnetic flux to die away. Therefore, there is a residual flux "frozen" on the surface of the rotating rotor, which cuts the stator windings, generating a voltage whose frequency depends on the rotor speed. If the load inertia is small, such as in a pump, or if the friction is high, there could be a significant loss of speed during the time the supply is disconnected. In this case, when the reconnection to delta is made, a large phase differential can exist between the supply and the rotor fluxes. This can give rise to very large current surges (as much or more than full-voltage locked rotor current), together with massive transient torque oscillations, which can peak at levels in the region of fifteen times full-load torque. Although the effects described are only present for a very short period of time (about one fifth of a second), they are sources of great stress and damage to the whole drive system, and where frequent starting is necessary, invoke high maintenance costs. The current surges, in the form of very high-level short-duration "spikes", are an increasing problem for computer control systems and other sensitive electronic equipment. The voltage disturbance on the supply is very difficult to filter out and can cause severe problems, especially when larger motors are involved.

Method B: Wye-Delta and other Reduced Voltage Starting Systems (continued)

There are methods of control, for example, the Wauchope starter, which eliminate or reduce the reconnection transients. However, such starters are expensive and have reliability implications, and they are not widely applied for these reasons.

The wye-delta starter also has disadvantages due to the restricted starting torque available (if you need 40% LRT to break-away, you can only increase the motor size, or revert to direct-on-line). Combined with the severe effects of the re-switching surges, and the additional costs of bringing six conductors from the motor to the starter instead of only three; wye-delta only offers an imperfect solution to the problem of starting the induction motor.

Method C: Primary Resistance Starter

It has long been recognized that the transition step in the wye-delta system was a source of problems such as welded contactors, sheared drive shafts etc. For many years a method of stepless control has been available in the form of the primary resistance starter.

This type of controller inserts a resistance in one, or more often in each, of the phase connections to the stator at start-up, after which it is progressively reduced and shorted out at the end of the acceleration process. Frequently, the resistances are movable blades that are gradually inserted into an electrolyte liquid. The mechanism is usually large and expensive, both to purchase and to maintain, and considerable heat is created by the passage of current through the electrolyte resistor. This limits the starting frequency (because the electrolyte has to condense back to liquid before a new start can proceed), and these restrictions prevent this starter from being a popular option when selecting a control system. However, it has the distinction of being the smoothest and least stressful method of accelerating an induction motor and its load.

Method D: Other Electro-Mechanical Systems

Other control methods such as auto-transformer starting (popular in North America), primary reactance starting etc., are employed to a greater or lesser extent, to compensate for some of the disadvantages of each type of starter discussed. Nevertheless, the fundamental problems of electro-mechanical starters remain, and it is only in the last decade or two that their dominance has been challenged by the introduction of power semiconductors controlled by electronics.

B.3.5 – The Semiconductor Motor Controller

During the 1950s, much effort was put into the development of a four-layer transistor device which had the power to switch large currents at high voltages when triggered by a very small pulse of current. This device became known as the silicon controlled rectifier (SCR), or in Europe, the “Thyristor”, and it is the basis on which all soft starting systems are built. The characteristic of most interest is the ability of the thyristor to switch rapidly (in about 5 millionths of a second) from “OFF” to “ON” when pulsed, and to remain “ON” until the current through the device falls to zero (which conveniently happens at the end of each half-cycle in alternating current supplies).

By controlling the switch-on point of a thyristor relative to the voltage zero crossing in each half wave of an alternating current, it is possible to regulate the energy passing through the device. The closer the turn-on point is to the voltage zero crossing point, the longer the energy is allowed to flow during the half-cycle. Conversely, delaying the turn-on point reduces the time for the energy to flow. Putting two thyristors back-to-back (or anti-parallel) in each of the phase connections to a motor, and by precisely controlling their turn-on points, an electronic soft starter continuously adjusts the passage of energy from the supply so that it is just sufficient for the motor to perform satisfactorily.

So, for instance, by starting with a large delay to the turn on point in each half cycle, and progressively reducing it over a selected time period, the voltage applied to the motor starts from a relatively low value and increases to full voltage. Due to the motor torque being proportional to the square of the applied voltage, the starting torque follows the same pattern giving the characteristic smooth, stepless start of the soft starter.

B.3.6 – Running Induction Motors

Once a start has been completed, the motor operating efficiency becomes of interest. When working at or near full load, the typical three-phase induction motor is relatively efficient, and readily achieves efficiencies of 85% to 95%. However, as shown below, motor efficiency falls dramatically when the load falls to less than 50% of rated output.

Figure B.3.6.1: Motor Efficiency/Load Characteristic

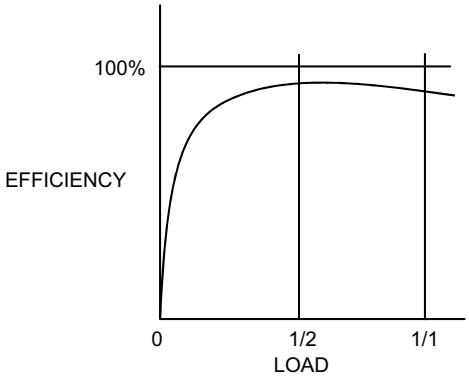

Motor Efficiency/Load Characteristic

In fact, very few motors actually experience consistent fully rated operation, and the vast majority operate at much lower loads due to either over-sizing (a very frequent situation), or natural load variations. For Fan and Pumping applications, the affinity laws will allow the inverter drive to show very considerable energy savings over virtually all other methods of control through varying the speed of the motor in response to changes in load. Where motor speeds cannot be varied, an optimizing version of semiconductor motor controller, such as the SR55, will also produce energy savings in lightly loaded motors. Less sophisticated systems of soft starters remain at full conduction, and the motor then behaves as if it were connected directly to the main supply. However, at light loads and mains voltages, induction motors always have excess magnetic flux, and efficiency loss and power factor degradation result. By detecting the load at any instant and adjusting the motor terminal voltage accordingly, it is possible to save some of the excitation energy and load loss, and therefore improve motor power factor when the motor is running inefficiently at light loads.

Figure B.3.6.2: Motor Efficiency/Loss Characteristic

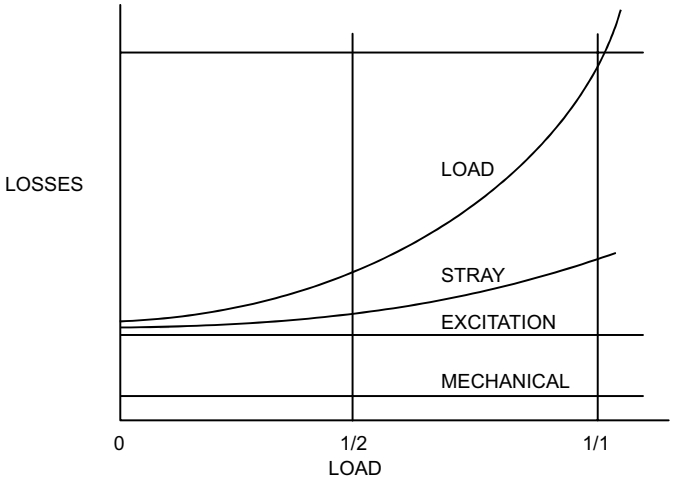

Motor Efficiency/Loss Characteristic

B.3.6 – Running Induction Motors (continued)

All SR55 Soft Starters are microprocessor controlled, and this gives them a number of advantages. Firstly, there are no adjustments to be made for the energy saving function; all calculations necessary to find the best degree of phase-back of the thyristors for any load condition is made by the microprocessor. Secondly, the start always synchronizes with the supply voltage, and a special structure of turn-on pulses virtually eliminates the inrush currents normally associated with motor start-up. This happens every time. Lastly, there is the absolutely stepless starting process, otherwise found only with primary resistance or reactance electromechanical starters – but without the wasted energy, and with the opportunity to control the maximum current allowed to flow during the starting process. Other features such as soft stopping are included to give considerable control over all modes of induction motor operation.

B.3.7 – Reliability Considerations

Reliability is an aspect which is of increasing concern regarding electronic controllers for induction motors. There is little point in installing an expensive item of electronic equipment to save potentially considerable amounts of money if the device is unreliable to the point that vital processes are constantly interrupted.

There are electronic products in the market place which appear to offer soft starting more cheaply. However, they almost always rely on less advantageous technologies such as analog control, or half-control, where one of the two thyristors in each phase is replaced with a diode. There are systems which only control the energy flow in one phase while the other two are directly connected. Owing to the variable quality and performance of many so-called inverters and soft starters available to the unsuspecting purchaser, international standards for these products have been developed.

So far, IEC 60947-4-2 – “AC Semiconductor Motor Controllers and Starters” defines the soft starter in every important respect, including thermal and overload performance as well as electromagnetic compatibility. By ensuring that any motor controller equipment purchased conforms to IEC 60947-4-2, a user should be reasonably safeguarded from shoddy or inadequate products when specifying equipment for future installations.

A particular advantage of the use of the optimizing soft starter is its impact on the maintenance requirements of associated electro-mechanical equipment. Optimizing lowers the surface temperature of the motor by reducing the losses within the motor. This prolongs the motor life, and reduces heating of the surrounding atmosphere in the process. If the atmosphere is subject to air conditioning, reducing the heat input will reduce the air conditioning costs. Reduced starting and running currents reduces cable losses, and contactor switching operations are carried out under the most advantageous conditions. No current flows on switch-on since all switching is carried out by the thyristors, which virtually eliminates the need for contact replacement.

Indeed, there are a growing number of installations where contactors are no longer employed, being replaced by controllable circuit breakers or isolators instead.

In summary, electronic controllers for most fixed-speed applications are opening new ways of increasing the efficient operation of induction motors, as well as offering significant benefits in control. Prospective users should ensure themselves of the quality and performance of any products they expect to fit, and this can be reasonably expected if compliance with the appropriate IEC standards is demanded.

Appendix B Glossary of Terms

Breakaway Torque: The minimum torque required to achieve rotor movement for the motor with its load.

Current Limit: The current at which the ramp is held. For the SR55, current limit is only active during start-up where it contributes to the motor control function. This feature is particularly useful when starting high-inertia loads that require an extended start-up period. (See also Overload Level.)

Direct-On-Line (DOL): The direct connection and disconnection of a motor from the AC main supply by means of a contactor or switch. Acceleration and operation is at full mains voltage only.

iERS: Intelligent Energy Recovery System. An advanced motor control technology proven to reduce the energy consumed in fixed speed motor applications. It matches the power consumption to the load required by intelligently monitoring and regulating energy consumption, voltage, current, and power factor during the motor starting and running stages. iERS automatically bypasses itself when it is not needed, and continues monitoring to re-engage itself as needed.

Inrush Current or Locked Rotor Current: The current that flows at the instant of connection of a motor to the power source. It is limited by the impedance presented by a de-energized motor and the applied voltage. Usually expressed as a multiple of motor full-load current.

Kick-start Voltage: The percentage of supply voltage applied before commencing ramp-up when a load has a high breakaway torque and the standard settings of pedestal voltage may not allow sufficient torque to be developed by the motor to cause acceleration.

Locked Rotor Current: Same as Inrush Current (defined above).

Overload Level: The level of current at which the controller overload begins to integrate. For the SR55, the overload detector is always active and provides protection against prolonged over-current operation.

Pedestal Voltage: The voltage that the unit applies to the motor at start-up. It is expressed as a percentage of the rated supply voltage.

Power Factor: The ratio, expressed as a trigonometric cosine, of the real power consumption to the apparent power consumption.

Top of Ramp (TOR): The unit achieves Top of Ramp (TOR) when it completes the start-up stage of motor control. (This occurs when the voltage applied to the motor first equals the main supply voltage.)

Soft-start: The regulation, by electronic means, of the supply voltage from an initial low value to full voltage during the starting process. This over-comes the inherent drawbacks of a switched supply. The motor torque is modified in proportion to the square of the voltage applied.

Trip: A trip occurs when the unit removes power to the motor because its operation equals the limit imposed by one of its self-protection features.

BLANK
PAGE

Electromagnetic Compatibility

Appendix C

Table of Contents

Appendix C: Electromagnetic Compatibility C–1
- *C.0 – Electromagnetic Compatibility (EMC)* C–2
- *C.1 – Introduction* C–2
- *C.2 – Applicable Standard Within the EU* C–2
- *C.3 – Mandatory Requirements Within the EU* C–2
- *C.4 – Guidance for Installation Personnel and System Designers* C–2
- *C.5 – EMC Basic Criteria* C–3
- *C.6 – Purchasing Implications of Meeting an EMC Standard.* C–3
- *C.7 – Basic EMC Considerations* C–4
  - *C.7.1 – Immunity* C–4
  - *C.7.2 – Emissions.* C–4
  - *C.7.3 – Emissions - Harmonics* C–4
  - *C.7.4 – Emissions - Radio Frequency (RF)* C–4
  - *C.7.5 – Emissions - Conducted* C–5
  - *C.7.6 – Important Systems Information* C–5
  - *C.7.7 – Strategies for Attaining and Maintaining EMC Compliance* C–6

C.0 – Electromagnetic Compatibility (EMC)

As supplied, all SR55 Soft Starters meet the standards of emission and immunity levels defined in the IEC 60947-4-2 and EN 60947-4-2 product standards for AC Semiconductor Motor Controllers and Starters. However, the EMC performance of the controller can be significantly affected by the manner in which it is incorporated into the system in which it is intended to operate. To prevent inadvertent degradation of EMC performance, attention must be given to motor cable lengths, wiring configurations, the nature of the power supply, etc., at the design, construction and implementation stages of a project.

C.1 – Introduction

It is widely accepted that electromagnetic compatibility between electronic and electrical products is a desirable objective. Technical standards are increasingly stipulating levels of EMC performance which compliant products are required to meet. The decision by the European Union (EU) to implement a community-wide directive covering EMC caused considerable activity among electrical and electronic equipment manufacturers and suppliers to identify, understand, and mitigate the sources of electromagnetic interference within their products and systems.

C.2 – Applicable Standard Within the EU

The product standard which defines EMC performance for soft starters is IEC 60947-4-2 'AC Semiconductor Motor Controllers and Starters.' (The Official Journal of the EC will list this standard as EN 60947-4-2.) The SR55 has been type tested in accordance with the test procedures and levels laid down in the product standard.

C.3 – Mandatory Requirements Within the EU

(Applicable to any person involved in the installation and operation of the equipment.)

The EU Directive 2004/108/EC, describes the required EMC performance of all electrical equipment which is to be connected to a low voltage supply network. It imposes an obligation on the manufacturer of the soft starter to provide sufficient information for installers, system integrators, users, and anyone else connected with the installation and operation of the equipment. This section provides the technical information to support the obligation of the manufacturer.

The provision and maintenance of compatibility extends from the manufacturer to the panel builder, assembler, systems integrator, and ultimately to the installer and user. Anyone involved in the installation and operation of the equipment, through a lack of knowledge, misdirection, or for other reasons, can completely negate the initial EMC performance of the equipment.

C.4 – Guidance for Installation Personnel and System Designers

For safety reasons, all SR55 products are intended to be installed and set to work by skilled personnel who are capable of interpreting and following EMC guidelines correctly. Any person not fully trained in the appropriate technology should not attempt the installation.

If you do not understand, or if you are unclear about any part of these guidelines, then please consult your supplier. Often, consultation with the supplier can avoid unnecessary problems in specifying and installing the correct combination of equipment.

C.5 – EMC Basic Criteria

The electromagnetic compatibility of a product is defined by two criteria:

1) Immunity to electromagnetic disturbances generated externally to the product.
2) The type and amount of conducted and radiated electromagnetic emissions emanating from the product.

Ascertaining the nature of the power supply is of primary consideration when deciding on appropriate EMC requirements. The requirements for equipment installed in heavy industrial environments (fed from their own isolated low voltage power supply) differ from those installed in residential, commercial, light industrial, and health-care applications (directly connected to a public low-voltage network).

Generally, industrial installations require higher immunity levels and permit higher levels of conducted and radiated emissions than those for non-industrial installations. On the other hand, lower levels of emissions output, and lower immunity levels, are specified for installations connected directly to the public low-voltage network.

C.6 – Purchasing Implications of Meeting an EMC Standard

Before purchasing components for the installation, the specifier must evaluate the expected source of power for the Soft Starter and understand exactly the implications for meeting EMC requirements. It is likely that failure to do so will result in the purchase and installation of inappropriate equipment.

IMPORTANT: The information and guidance given in section C.7 forms part of the statutory requirements of the European Union Directive 2004/108/EC on EMC.

C.7 – Basic EMC Considerations

C.7.1 – Immunity

The product standard for immunity requirements is EN 60947-4-2:2012. All SR55 Soft Starter products meet, or exceed the industrial level immunity requirements laid down in this standard.

C.7.2 – Emissions

Emissions are classified as low frequency (below 9kHz), known as harmonics, and high or radio frequency (above 9kHz). Both radio-frequency emissions and low-frequency harmonics are generated by the action of the SR55 Soft-Starter.

NOTICE: This product has been designed for environment A. Use of this product in environment B may cause unwanted electromagnetic disturbances in which case the user may be required to take adequate mitigating measures.

C.7.3 – Emissions - Harmonics

During normal operation, soft starters turn their semiconductor switches on and off in order to vary the voltage at the motor terminals, and this introduces supply discontinuities and generates harmonics. However, the mode of pulsing used by SR55 Soft Starters minimizes these harmonic effects, since SR55 power circuits are configured as a fully-controlled regulators (W3C).

Only non-triplen (integer multiples of the third harmonic), odd harmonic frequencies are created, starting with and diminishing rapidly from the fifth harmonic, and virtually disappearing by the nineteenth harmonic.

C.7.4 – Emissions - Radio Frequency (RF)

Radio frequency emissions are propagated in two ways:

1) Conduction along the leads supplying the soft starter.
2) Radiation from the operating equipment.

They also have two sources:

1) The high-frequency currents associated with the control electronics (this includes the microprocessor).
2) The action of the semiconductor devices forming the power switching elements located in the controller main circuits.

The radiation measurements made from operating versions of SR55 Soft Starters show levels lower than the allowed limits. Further, enclosures of metallic construction provide additional shielding for SR55 Soft Starters mounted within them. The only radiated interference effect that might arise from a soft starter would be if mobile telephones, walkie-talkies, etc. were to be used in very close proximity to a unit which was operating with the enclosure door open. For this reason, any enclosure must display a label that brings the possibility of electromagnetic interference to the attention of the operator under these circumstances.

C.7.5 – Emissions - Conducted

Conducted emissions are able to travel great distances and may cause interference to any neighboring consumers connected to the common low-voltage supply network.

Allowable levels for conducted emissions generated by semiconductor motor controllers and starters are influenced by the nature of the low-voltage power distribution network. The determining factor is whether the source of power is, either:

A) a private supply with a single consumer whose Point of Common Coupling (PCC) is at a high or medium voltage transformer, or

B) a public low-voltage network with more than one consumer, where the individual PCC is made directly to the network itself.

The first type of supply (a) is identified as “Industrial”, and requires the use of soft starters compliant with EN 60947-4-2 Table 19 Environment A Emission Levels.

The second type of supply (b) is identified as “Residential” and requires the use of Class B equipment. Class B equipment is equipment suitable for use in domestic establishments and in establishments directly connected to a low-voltage power supply network which supplies buildings for domestic purposes.

C.7.6 – Important Systems Information

The specification limits for both equipment classes assume systems are grounded at the star (wye) point of the supply transformer through low impedance connections.

Certain industries, particularly continuous process industries, employ distribution systems that operate either with a ground connection through a high impedance or without a ground at all. These systems may cause severe problems of operator safety when installed with capacitive high frequency filters. Such systems are not considered in this document.

In the case of an isolated or high impedance grounded system, seek advice from your supplier before fitting a capacitive high frequency filter to an SR55 Soft Starter. It is essential that the specifying authority, user, or installer has a clear knowledge of the type of network to which the product is to be installed before making decisions as to which EMC strategy to adopt.

As supplied, all SR55 products comply with the conducted emissions requirements for environment class A as defined by EN 60947-4-2:2012 Table 19. However, the length and type of cable connecting the motor to the starter module materially affects the level of emissions generated, and can amplify them greatly. The standard also allows different levels of emissions depending on rated input power, which also affects the need to fit filters. The EN 60947-4-2:2012 standard only requires consideration of steady-state conditions for EMC emission purposes, and expressly excludes varying conditions such as those during ramp-up and ramp-down.

Finally, statistics show that the number of disturbances arising from soft starters, operating in a very wide variety of applications and networks throughout the world, is insignificant. Where EMC disturbances occur, it is very unlikely that they can be genuinely attributed to a soft starter.

C.7.7 – Strategies for Attaining and Maintaining EMC Compliance

Where possible, minimize the effect of electrical interference by using the strategies listed below.

- *Locate the SR55 Soft Starter unit as close as reasonably possible to the motor terminal box in order to minimize cable length.*
- *Ensure that, within any enclosure, the control wiring does not run parallel to the power wiring. Where this is unavoidable, maintain a 100 mm [3.9 in] separation between control cables and power cables.*
- *Where possible, ensure that the control wiring crosses at right angles to the power wiring. This practice reduces the cross-coupling between cables.*
- *Shield any cables carrying sensitive signals. The digital control inputs to a SR55 are opto-isolated, and do not normally require buffering (e.g. through a small relay) or shielding.*

Where a special purpose system filter has been applied at the point of common coupling, additional filtering of individual drives is not necessary and may introduce undesirable effects due to resonance.

For the purposes of EMC, the connections between the SR55 controller and motor are considered to be an extension of the enclosure, and preferably should be contained within grounded metallic trunking or conduit. Armored cable may be used providing it is correctly terminated, although the EMC performance will be slightly inferior. Shielded cable is not necessary.

All associated electrical and electronic equipment near to the controller complies with the emission and immunity requirements of the EMC Directive.

Sizing an SR55 Soft Starter

Appendix D

Table of Contents

Appendix D: Sizing an SR55 Soft Starter D–1

SR55 Soft Starter Selection Steps D–2

SR55 Soft Starter Overload Trip D–3

SR55 Index Ratings D–3

Standard Overload Current Profile and Duty Cycle D–4

Increased Starts per Hour – Derating D–5

Derating Examples. D–6

SR55 Soft Starter Selection Steps

1) Determine the required trip class based on the motor load and required start time. See O/L Trip Classes table below. (Also refer to the definitions of Class 10, 20, and 30 Trip Curves in the "SR55 Soft Starter Overload Trip" section of this chapter.)

SR55 Soft Starters – O/L Trip Classes					
Default	10	Crusher	30	Pump - Submersible Centrifugal	10
Heavy	20	Fan - Low Inertia <85A	10	Pump - Submersible Rotodynamic	10
Agitator	10	Fan - High Inertia >85A	30	Pump - Positive Displacement Reciprocating	20
Compressor - Centrifugal	20	Feeder - screw	10	Pump - Positive Displacement Rotary	20
Compressor - Reciprocating	20	Grinder	20	Pump Jack	20
Compressor - Rotary Screw	20	Hammer mill	20	Rolling mill	20
Compressor - Rotary Vane	10	Lathe machines	10	Roots Blower	20
Compressor - Scroll	10	Mills - Flour, etc.	20	Saw - Band	10
Ball mill	20	Mixer - Unloaded	10	Saw - Circular	20
Centrifuge*	30	Mixer - Loaded	20	Screen - Vibrating	20
Bow Thruster - Zero Pitch	10	Molding Machine	10	Shredder	30
Bow Thruster - Loaded	20	Pelletizers	20	Transformers, Voltage Regulators	10
Conveyor - Unloaded	10	Plastic and textile machines	10	Tumblers	20
Conveyor - Loaded	20	Press, flywheel	20	Wood chipper	30
** Size centrifuge starter at I(A) = (motor FLA x 2.3). Trip Class 30.*					

2) From the SR55 Soft Starters Selection Table below, select the row with the correct motor full load amps. Then select the correct SR55 soft starter based on Trip Class (longer start times require a larger starter). Notice that there are different Motor Amps columns for starters wired In-Line (most common) and In-Delta. Select the applicable SR55 part number based on the required Trip Class, motor HP, and connection type.

SR55 Soft Starters – Selection Table (per IEC 60947-4-1:2009 Table G.1)												
Motor Size										***Soft Starter Size***		
In-Line Connection					***In-Delta Connection ****					***Application Trip Class***		
I (A)	***HP @***				***I (A)***	***HP @***				***Class 10***	***Class 20***	***Class 30***
	200V	***208V***	***230V***	***460V***		***200V***	***208V***	***230V***	***460V***			
17	3	5	5	10	29	7.5	7.5	10	20	SR55-017	SR55-021	SR55-027
21	5	5	5	15	36	10	10	10	25	SR55-021	SR55-027	SR55-034
27	7.5	7.5	7.5	20	47	10	15	15	30	SR55-027	SR55-034	SR55-040
34	10	10	10	25	59	15	15	20	40	SR55-034	SR55-040	SR55-052
40	10	10	10	30	69	20	20	25	50	SR55-040	SR55-052	SR55-065
52	15	15	15	40	90	25	30	30	60	SR55-052	SR55-065	SR55-077
65	20	20	20	50	113	30	30	40	75	SR55-065	SR55-077	SR55-096
77	20	25	25	60	133	40	40	50	100	SR55-077	SR55-096	SR55-124
96	30	30	30	75	166	50	50	60	125	SR55-096	SR55-124	SR55-156
124	40	40	40	100	215	60	75	75	150	SR55-124	SR55-156	SR55-180
156	50	50	60	125	270	75	75	100	200	SR55-156	SR55-180	SR55-242
180	60	60	60	150	312	100	100	125	250	SR55-180	SR55-242	SR55-302
242	75	75	75	200	419	150	150	150	300	SR55-242	SR55-302	SR55-361
302	100	100	100	250	523	150	150	200	450	SR55-302	SR55-361	SR55-414
361	125	125	150	300	625	200	200	250	500	SR55-361	SR55-414	SR55-477
414	150	150	150	350	717	250	250	250	500	SR55-414	SR55-477	n/a
477	150	150	150	400	826	250	300	300	600	SR55-477	n/a	n/a

* *For In-Delta connections, all six motor wires must be available for connection, and it is critical to exactly follow the In-Delta wiring diagram in the SR55 User Manual or Quick-start Guide. Nine-lead motors CANNOT be connected in the delta. The Soft Starter will only sense the Phase Current, which is about 58% of the Line Current.*

* *For In-Delta connections, a main contactor that is controlled by the Run relay of the SR55 must be used in the incoming power circuit for isolation. Circuit breaker isolation alone is not sufficient.*

* *iERS energy optimizing feature is not available for In-Delta connections.*

SR55 Soft Starter Overload Trip

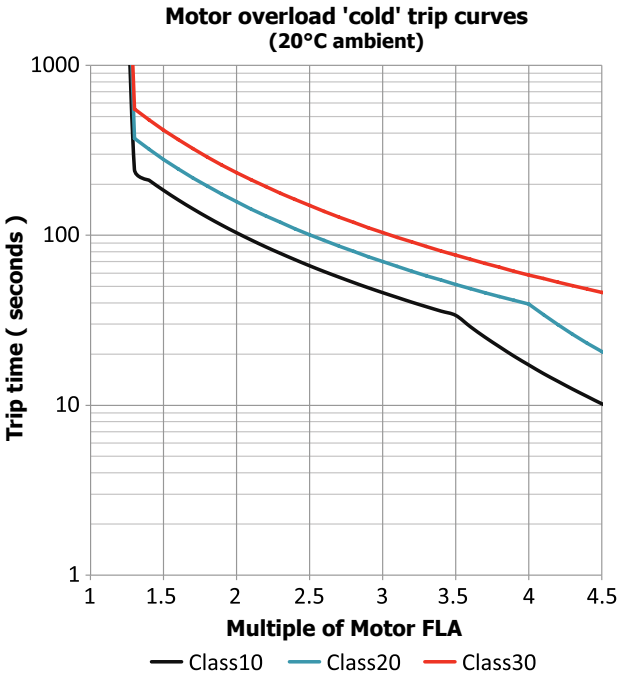

The SR55 soft starter provides motor overload protection, which can be configured through the touchscreen. Overload trip settings are determined by the Motor Current setting and the Trip Class setting. Trip class choices are class 10, class 20, and class 30. The SR55 soft starters are protected using full I^2T motor overload with memory.

SR55 Index Ratings

(per IEC 60947-4-2)

SR55 Index Ratings *		
Model Number	***I_e (A)***	***Standard Operation AC-53a; X-Tx; F-S***
SR55-017 to SR55-180	***17 to 195***	***AC-53a: 3.5-17; 90-5***
SR55-242 to SR55-477	***242 to 500***	***AC-53a: 3.5-17; 90-3***
** Index ratings AC-53a and AC-53b are specified by IEC standard # 60947-4-2. IEC Index Ratings are comprised of Rated Operational Current (I_e), Utilization Category, Overload Current Profile (X-Tx), and Duty Cycle (F-S) or OFF-time.*		

Index Rating Example – Standard Operation (AC-53a Utilization Category per IEC 60947-4-2)

17 to 195 - AC-53a: 3.5-17; 90-5

- Duty Cycle (F-S)
  90-5 = 90% duty cycle - 5 cycles/hr
  [if multiple starts/hr are required, 90% D.C. requires off time ≥ 10% of previous run time]
- Overload Current Profile (X-Tx)
  3.5-17 = 3.5 times rated current (I_e) for 17s
- Utilization Category
  AC-53a = controller semiconductors provide squirrel-cage motor Start, Run, and Stop control
- Rated Operational Current (I_e)
  17 to 195 = controllers with Rated Operational Currents from 17A to 195A

Standard Overload Current Profile and Duty Cycle

The SR55 has been designed for a specific Overload Current Profile and Duty Cycle as shown in the previous SR55 Index Ratings section of this chapter.

The Overload Current Profile is expressed by two symbols, X and Tx.

X denotes the overload current as a multiple of I_e and represents the maximum value of operating current due to starting, operating, or maneuvering under overload conditions.

- *For example, X = 3.5 means that the maximum overload start current allowed is 3.5 times FLC.*

Tx denotes the duration of the controlled overload currents during starting, stopping, operating, or maneuvering.

- *For example, Tx = 17 means that the maximum allowed overload current is permitted for up to 17 seconds only.*

The Duty Cycle is expressed by two symbols, F and S which describe the duty and also set the time that must be allowed for cooling.

F is the ratio of the on-load period to the total period expressed as a percentage.

- *For example, F= 90 means that the soft starter is ON for 90% of the time and then OFF for 10% of the time between each start.*
- *If there are not multiple starts per hour, then the Duty Cycle is continuous.*

S is the number of starts or operating cycles per hour.

- *For example, S = 5 means that the soft starter is capable of 5 equally spaced starts per hour.*

These characteristics are summarized below in Figure 1.

Figure 1: Standard Overload Current Profiles and Duty Cycles

Model	Rated Current (A)	Class 10 O/L Multiple (X)	Class 10 O/L Time (Tx)	Starts / Hour (S)	Duty (F)
SR55-017	017	3.5	17	5	90%
SR55-021	021				
SR55-027	027				
SR55-034	034				
SR55-040	040				
SR55-052	052				
SR55-065	065				
SR55-077	077				
SR55-096	096				
SR55-124	124				
SR55-156	156				
SR55-180	180				
SR55-242	242			3	
SR55-302	302				
SR55-361	361				
SR55-414	414				
SR55-477	477				

Increased Starts per Hour – Derating

If more than the standard number of starts/hour is required, the SR55 must be derated. To derate for more starts/hour, the motor full load current must be less than the SR55 current. The relationship between the SR55 deration and the starts/hour is given below in Figure 2 and the two examples that follow. This assumes that the SR55 is still operating at the same duty (F) as given in Figure 1.

Figure 2: SR55 Starts/Hour Deration

Deration Curve

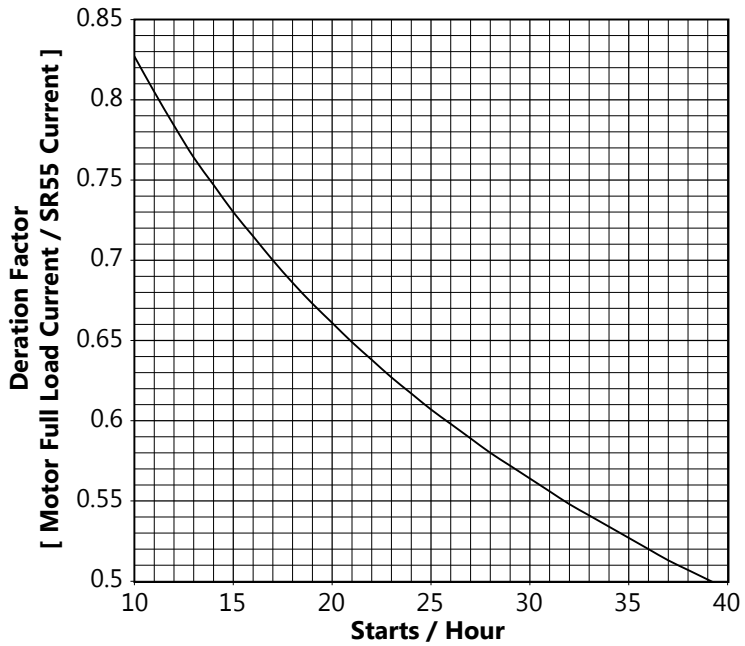

Starts/Hour	***Deration Factor***
10	0.83
15	0.73
20	0.66
25	0.61
30	0.56
35	0.53
40	0.50

Deration Factor = (138 - (24·ln(starts/hr))) / 100
[where ln(starts/hr) is the natural log of the # of starts/hour]
Example: Deration Factor for 10 starts/hr = (138 - (24·ln(10))) / 100 = 0.83

Derating Examples

Example 1: SR55 Selection and Configuration		
Step	***SR55 Selection***	
1	Application	Loaded Conveyor
2	Trip Class	20
3	Duty	90%
4	In-Line or In-Delta	In-Line
5	Ambient Temperature	40°C
6	Altitude	1000m
7	Full Motor Load Current	80A
8	Current Limit	4 x 80A = 320A
9	Number of Starts/Hour	10
10	Deration Factor (from Fig.2)	0.83
11	SR55 (A) = Motor FLC / Deration Factor	96A
12	Determine SR55 from Sizing Guide	SR55-096
Step	***SR55 Configuration***	
1	Select Application	(Auto Setup)
2	Leave Motor Current 100A (maximum)	(Auto Setup)
3	Set Start Current Limit to 320A (400% of motor FLC)	(Start Current Limit)
4	Set Overload Level to 88A (110% of motor FLC)	(Overload Settings)
Step	***SR55 Alternative Configuration***	
1	Set Application	(Auto Setup)
2	Set Motor Current to 80A	(Auto Setup)
3	Warm Trip Time will be reduced to Trip Class 10 value	(320A for 13s)

Example 2: SR55 Selection and Configuration		
Step	***SR55 Selection***	
1	Application	Agitator
2	Trip Class	10
3	Duty	90%
4	In-Line or In-Delta	In-Line
5	Ambient Temperature	40°C
6	Altitude	1000m
7	Full Motor Load Current	66A
8	Current Limit	3.5 x 66A = 231A
9	Number of Starts/Hour	20
10	Deration Factor (from Fig.2)	0.66
11	SR55 (A) = Motor FLC / Deration Factor	100A
12	Determine SR55 from Sizing Guide	SR55-124
Step	***SR55 Configuration***	
1	Select Application	(Auto Setup)
2	Leave Motor Current 100A (maximum)	(Auto Setup)
3	Set Start Current Limit to 231A (350% of motor FLC)	(Start Current Limit)
4	Set Overload Level to 72A (110% of motor FLC)	(Overload Settings)
Step	***SR55 Alternative Configuration***	
1	Set Application	(Auto Setup)
2	Set Motor Current to 66A	(Auto Setup)
3	Set Trip Class to 30	(Overload Settings)
4	Warm Trip Time will be reduced to Trip Class 10 value	(231A for 17s)

BLANK
PAGE